ADC + FPGA Connector

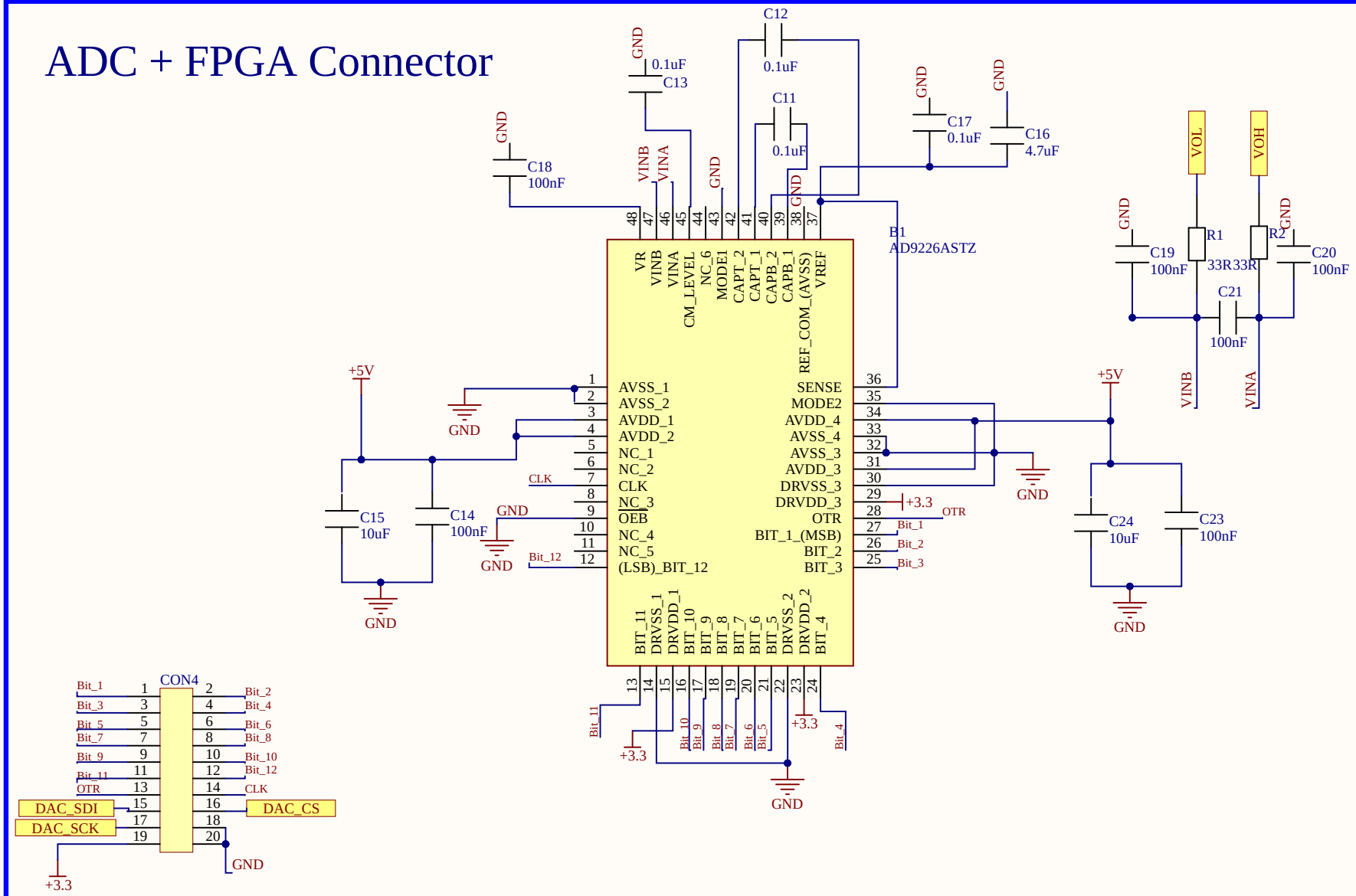

Title		
Size A	Number	Revision
Date: 3/27/2026		Sheet of
File: C:\Projects\..\ADC.SchDoc		Drawn By:

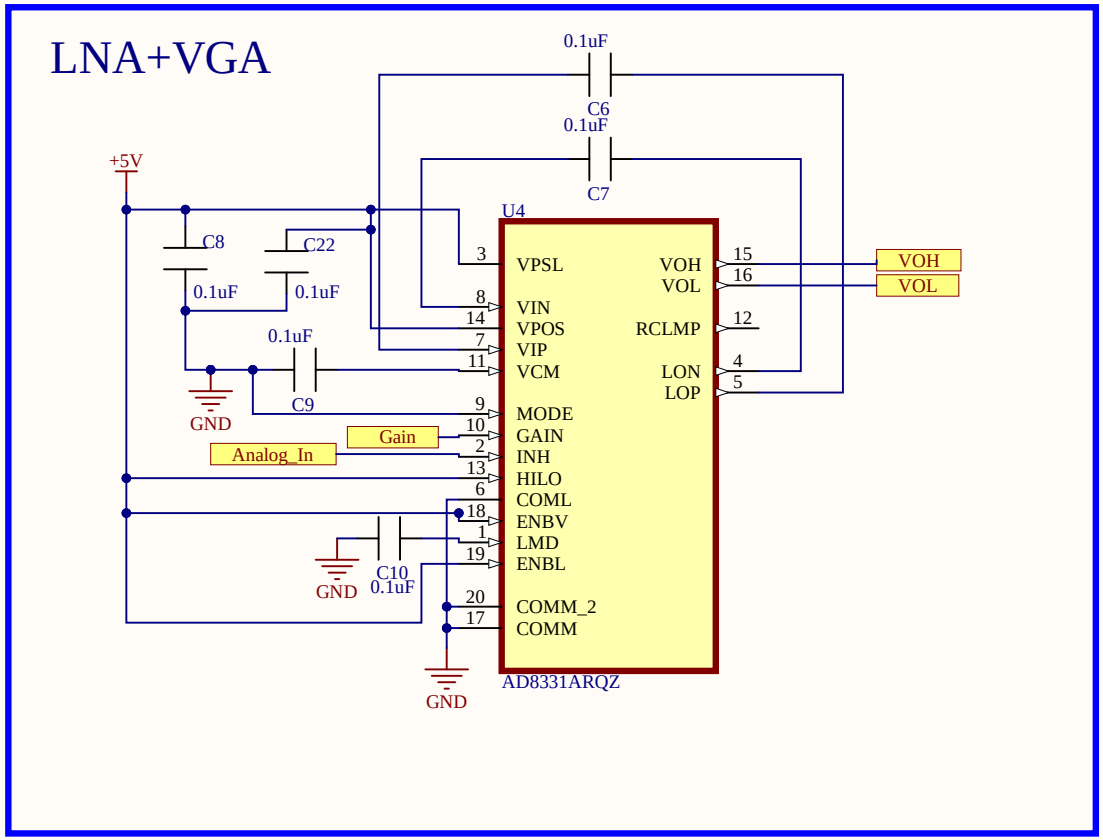

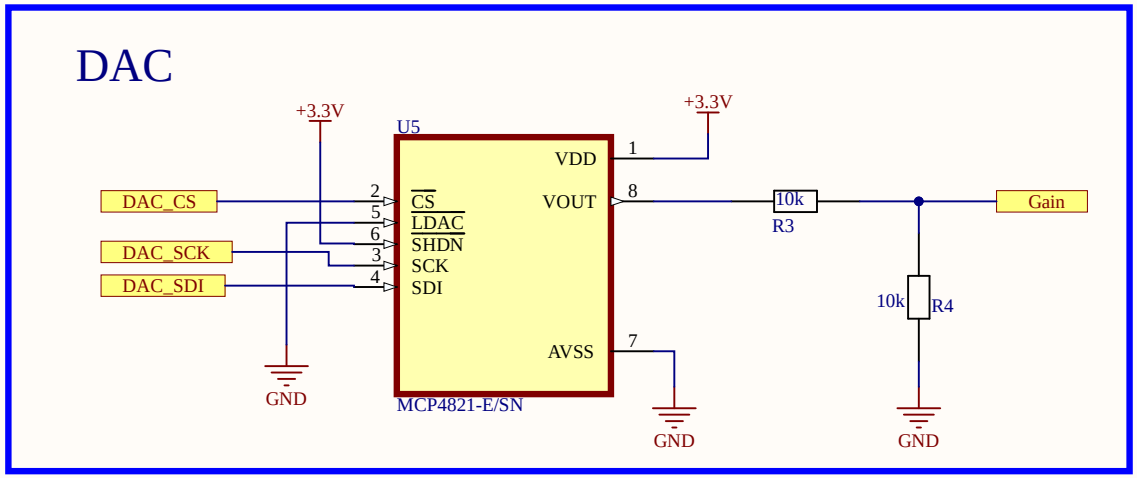

Title		
Size A	Number	Revision
Date: 3/27/2026		Sheet of
File: C:\Projects\..\Analog Front End.SchDoc		Drawn By:

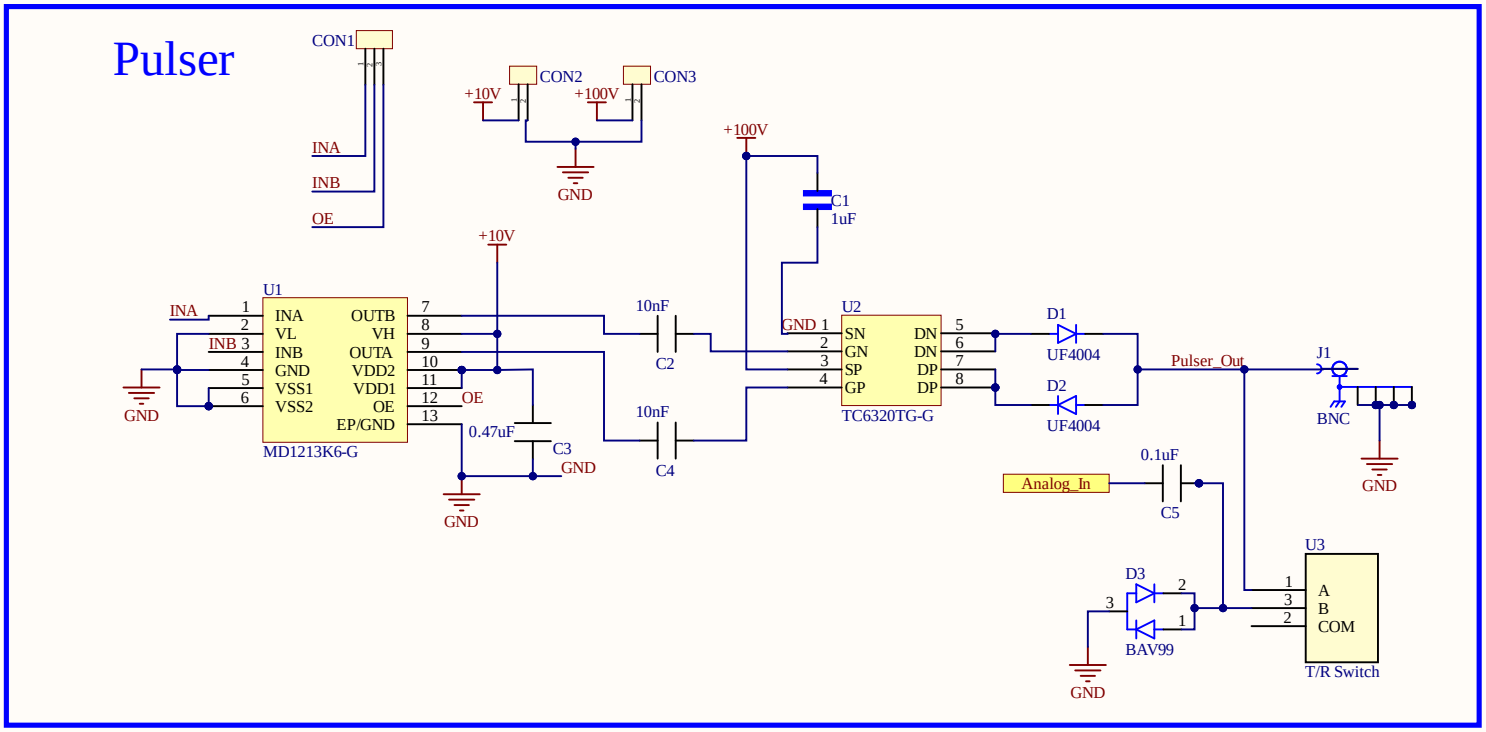

Title		
Size A4	Number	Revision
Date: 3/27/2026		Sheet of
File: C:\Projects\..\Pulser.SchDoc		Drawn By: