Neurocomputing 636 (2025) 129967

Contents lists available at ScienceDirect

Neurocomputing

journal homepage: www.elsevier.com/locate/neucom

# A memory failure computational model in Alzheimer-like disease via continuous delayed Hopfield network with Lurie control system based healing

Rafael Fernandes Pinheiro [a],*, Diego Colón [b], Rui Fonseca-Pinto [a]

[a] Center for Innovative Care and Health Technology (ciTechCare), School of Health Sciences (ESSLei), Polytechnic University of Leiria, R. das Olhalvas, Leiria, 2414-016, Leiria, Portugal

[b] Laboratory of Automation and Control (LAC), Telecommunications and Control Department, Polytechnic School, University of São Paulo, Av. Prof. Luciano Gualberto, Travessa 3, No. 158, São Paulo, 05508-900, Brazil

ARTICLE INFO

Communicated by B. Luo

*Keywords:*
Alzheimer disease
Lurie type systems
Hopfield neural network
Robust control
Neuroscience
DK-iteration

ABSTRACT

Alzheimer's disease (AD) is a degenerative neurological condition that impacts millions of individuals across the globe and remains without a healing. In the search for new possibilities of treatments for this terrible disease, this work presents the improved Alzheimer-like disease (IALD) model for memory failure and connects it to a new control technique that establishes a cure for the memory lost, either in biological or in artificial neural networks. For the IALD model, continuous Hopfield neural networks (HNN) with time delay are used. From the healing side, a robust control technique is used, which is based on new discoveries in Lurie control systems. In addition, this paper reviews the development of Alzheimer-like disease (ALD) model, as well as, the relationship of HNN with Lurie system. Simulations are executed to validate the model and to show the efficacy of applying a new theorem from Lurie problem. With the results presented, this work proposes a new conceptual paradigm that could potentially be applied in memory failure treatments in AD, as well as in hardware implemented HNN under adversarial attacks or adverse environmental conditions.

## 1. Introduction

The human brain, composed of billions of neurons, is the most fascinating and complex human organ, where despite all technological and medical advances, the unknown still prevails. Although identified more than a hundred years ago, Alzheimer's disease (AD) [1] continues to challenge doctors and scientists who are trying to unravel it, seeking to understand its etiology, pathogenesis and how to treat it, in order to prevent it from leading people to the loss of cognitive functions and consequently to death. According to [2] the AD kills more than one million people a year, and the most accepted etiological hypothesis is the deregulated production of $\beta$-amyloid (A$\beta$) protein, which forms assemblies (plaques) in the brain, disrupting neural activity. Synaptic loss is probably the main reason for cognitive decline, which is caused by high levels of A$\beta$ [3]. Besides that, A$\beta$ in normal levels is an essential part of regulatory mechanisms in the synaptic activity, but in pathological concentrations can affect network level activity, leading to instabilities [3]. This suggests that an analysis of the disease at the network level, in particular a mathematical modeling, can be useful in the control or cure of the disease.

Several articles [4–6] model, besides the concentration and diffusion of A$\beta$ protein and its aggregates, other important proteins, like the $\tau$ protein and the intracellular neurofibrillary tangles (NFT), as well as the amyloid precursors protein (APP), which also have roles in the development of the disease. Those models can be used to test new drugs *in silico*, but cannot be used in treatments *in vivo*, as there is no practical way to measure those concentrations, specially of A$\beta$ [3]. Besides that, the synthesis of A$\beta$ protein cannot be silenced, as it depends on gene expressions and it is essential to the neuron functioning. Perhaps a more effective treatment would be directly stimulating the affected biological networks, which are going to be the case in this paper.

Artificial neural networks (ANN) are computational methods inspired in the functioning of biological neurons. Some types of neural networks have the ability to simulate associative memory [7–20] and the search for models that simulate human memory is a hot area of research to support neuroscience, where important recent work has emerged [21–23]. Specifically, the Hopfield neural networks (HNN), which this work addresses, has the capacity to simulate associative memory and can be used in simulations of stages of AD [10–18].

* Corresponding author.
*E-mail addresses:* rafael.f.pinheiro@ipleiria.pt (R.F. Pinheiro), diego@lac.usp.br (D. Colón), rui.pinto@ipleiria.pt (R. Fonseca-Pinto).

https://doi.org/10.1016/j.neucom.2025.129967
Received 1 May 2024; Received in revised form 26 November 2024; Accepted 8 March 2025
Available online 19 March 2025
0925-2312/© 2026 The Authors. Published by Elsevier B.V. This is an open access article under the CC BY license (http://creativecommons.org/licenses/by/4.0/).

In addition, HNN is useful in optimization problems [24] and other applications such as presented in [25], like user authentication system, nonlinear system identification, oil extraction industry and in the financial area. Recently, HNN has been applied in other areas, for example: stochastic process [26]; memristive networks and medical data protection [27]; system for image encryption [28]; and simulation of electromagnetic radiation effects [29]. Many studies have emerged to provide the diagnosis of AD using ANN techniques (for instance [30, 31]), but the ANN in those cases are implemented in conventional computers (von Neumann architecture) as tools for Machine Learning in image data analysis.

The development of mathematical models for AD has been constant in the literature [32], although it does not compare to the large amount of work in the area of diagnosis. The Hopfield neuron, despite of being one of the first neuron models, is not very precise in comparison to more recent models like the Hodgkin–Huxley or the FitzHugh–Nagumo models [33]. On the other hand, as a first approach to simulate associative memory, the Hopfield neuron (and the neural nets formed by them, that is Hopfield neural networks or HNN) captures the essential brain feature that we are interested, without being excessively complex [8,9,20]. Also, the memory loss could occur in ANN, in particular HNN implemented in analog hardware under adverse environmental conditions or under adversarial attacks. Therefore, techniques to control and/or heal AD *in vivo* and memory loss in hardware implemented associative memory (in particular HNN) are welcome, and they are the subject of this work. The level of abstraction developed in this paper allows that the methods developed could be applied either in biological and other physical networks that have memory capacity.

Control theory is a fundamental part of this study to mitigate the effects of AD. Besides the authors works [17,18,34], in the literature search, only one paper was found [35], which uses electromagnetic brain stimulation monitored by EEG (electroencephalogram) and different control techniques from those presented here. In fact, our approach, using Lurie Control Systems for controlling/healing memory loss provides one of the most important properties of feedback, that is the network's robustness of stability. Other applications of HNN different from associative memory, like secret key generation in cryptography, could also benefit of more robustness [36–38]. The control theory applied here arises from the investigations of the well-known Lurie problem (LP) [39], as well as from the area of Robust Control, with considerable developments from Doyle [40], Skogestad [41] and Zhou [42]. LP emerged in 1947 due to a problem of automatic aircraft control, and its study in the aerospace field is still ongoing [43]. Other areas have also been affected by LP research, such as: chaos synchronization [44,45], linear parameter varying (LPV) system [46], neural networks [47], memristive neural networks [48], and $\mu$-analysis [49]. The relationship of LP to HNN is known [44], and it is shown that HNN is a particular case of LP [47]. A recent review of the LP and its applications in the biomedical field can be found in the paper [50].

As a foundation for this paper, one highlights the previous works [17,18,51]. The paper [51] proposes a controller for an HNN with two delay-free neurons. The work [17] improves the technique and applies this controller to a delay-free HNN with twelve neurons simulating associative memory, and finally, [18] presents new conditions for absolute stability of a class of Lurie systems, presents the delay-free Alzheimer-Like disease (ALD) model and the extension of this model by including time-delays, which is here called Improved Alzheimer-Like disease (IALD). New control techniques are then presented.

### 1.1. Contributions

This paper can be considered as a continuation of [17,18,34,51–53], with substantial additional material being inserted, such as: literature review related to AD modeling, neural-electronic interfaces, analog hardware implementation of the controllers, suggestion of models (ALD and IALD, which includes time-delays) that could represent biological or artificial neural networks, application of the new controller conceived in [18], literature review and a proposal to continue this investigation for *in vivo* and hardware implemented HNN experiments in the future. The main scientific contributions and advances that this paper proposes are presented in more detail below, separated into bullets:

- The main contribution of this work is the application of the method developed by the authors, that is, design of robust controllers for time-delayed Lurie type systems, for the time-delayed HNN, in order to provide more robustness of stability and then curing the problem of memory loss in biological neural network. The neural network is modeled by the system of equations in (13), which represents the IALD model, and the application of Theorem 2 and Algorithm 1 for the controller design for the IALD network. To the best of the authors knowledge, this application is new in the literature.
- Proposition of a model for biological neural networks which include time-delay and uncertainties in the parameters. It introduces more realism, as well as maintain low computational burden for a large number of neurons, since any system that evolves over time presents some delay. Also, time-delay neural networks are prone to become unstable, and time-delay, when present, contributes to instabilization. Although the use of HNN in AD modeling is not new [13,15,17,18], here it is done in a different way. First, the model is in continuous time and based on external inputs (following the approach in [54]), which is a different way of interpreting and using the HNN. Other differences are: in the paper [13], discrete HNN is used to train the Venn nets that model the AD; in [15], discrete HNN is used in conjunction with a mean field theory and Statistical Mechanics approach; in [54], the model is based on external inputs but does not use HNN; in [17,18], it was done in HNN without delay.
- Another contribution of this paper is that the same method to design controllers for LP could also be used for providing more robustness in analog hardware implemented HNN, which is used for associative memory or optimization in neural computation framework. In the case of associative memory, the controllers, implemented in the same hardware, would recover the memory loss in adverse operational conditions or under adversarial attacks. Perhaps this contribution is the most important for the majority of the public of this journal.
- In the bibliographic research carried out for the preparation of this paper, with the exception of [17,18] no papers that relate LP, robust control, HNN and AD were found. In this sense, one believes that one of the originalities of this work is to relate those three areas of research, that is, LP, HNN, and AD, and with the inclusion of the delay, this work is world-first.
- Finally, by suggestion of the reviewers, another contribution is the discussion and suggestions of implementations of the controllers either for biological neural network (and cure of memory loss) or for HNN. The bibliographical review covered field programmable analog array (FPAA), circuits with memristors, patch clamp techniques [55] and other microtechnology techniques [56–58].

The rest of this paper is organized as follows: in Section 2, there is the theoretical background; in Section 3, a review of how the ALD model and the controllers obtained are carried out; in Section 4, it is demonstrated how the IALD model is obtained from the ALD model and the control system design from the application of Theorem 2 of [18]; throughout Sections 3 and 4, simulations are performed to validate the model and demonstrate the effectiveness of the application; in Section 5, discussions are made and future research are proposed; finally, in Section 6, the overall results are summarized in the conclusion.

## 2. Theoretical background

This section lays the necessary groundwork on AD, LP, robust control and HNN to proceed with modeling and application in the following sections. The section starts with a presentation of AD and some of its most recent etiologic and pathogenic hypotheses. Then, LP, robust control and HNN are presented, including the relationship between LP and HNN.

### 2.1. Alzheimer's disease

Alois Alzheimer [1] described clinical observations in a woman of 51 years old, whose anatomical features were unusual to any previously known disease. The first symptom, which the woman demonstrated, was the idea of being jealous of her husband, and in a short time, she developed a rapid memory loss. AD leads to death, and one of its main consequences is the loss of memory due to synaptic dysfunction [59]. The causes of AD are uncertain and unreliable, and the method of diagnosis are by clinical examinations, neuropsychological tests, laboratory studies and the patient's medical history. A definitive diagnosis with the patient alive is not possible, because it is necessary to deepen histopathology [60].

There are markers of AD of macroscopic and microscopic dimensions, and these are taken into account for the diagnosis. Macroscopic markers are related to decreased brain weight, that is 15% to 35% in brain weight reduction, cortex atrophy, ventricular expansion, decreased blood flow and hippocampus impairment [61]. The synaptic loss, neuronal death, amyloid plaque findings and neurofibrillar entanglements are related to microscopic indicators [61,62]. As said, the most accepted etiological hypothesis is the deregulated production of $\beta$-amyloid (A$\beta$) protein, which forms assemblies (plaques) in the brain and hyperphosphoric tangles [63], disrupting neural activity. Synaptic loss is probably the main reason for cognitive decline, which is caused by high levels of A$\beta$ [3]. Neurons communicate through synapses, and synaptic loss leads to cognitive decline. Moreover, neuronal death is preceded by synaptic loss, thus it is one of the most important cognitive impairment in AD. In the present paper, the adopted model is the Hopfield neuron, which represents synapse function in an adequate form (which will be shown in the following sections).

It is known that cells in the hippocampus are the first to be damaged by AD leading to memory loss. It is known for a long time that the changes that represent stored memory must be recorded in the synapses and plasticity of neurons [64], and the sensory experiences directly modify neuronal and synaptic morphology. The formation of memories, particularly from complex images and experiences, appears to be a complex process, involving several brain structures [65]. On the other hand, substances related to synapses activity, like acetylcholine (which is a neurotransmitter and is depleted in AD), are essential to the memory process, which corroborates with the hypothesis that synapses are crucial in memory formation [65]. In the present paper, the magnitude of synaptic connections will be the main parameter of the neural networks that store memories. The cholinergic system, composed of the cholinergic neurons, is essential to the memory process, as it participates in the acetylcholine production. Progressive cholinergic deficits are associated to AD, affecting the synapses. Malfunction of this system is always present in AD [66] and promotes formation of A$\beta$ and its accumulation, among other effects of AD. Some drugs can induce AD-like symptoms, like scopolamine, which alters the cholinergic system, and has been used in several studies.

The cure for AD has not yet been found. Meanwhile, there are drugs [67,68] that alleviate the effects of memory loss [59], progressive dementia, agitation, apathy, depression, loss of appetite, muscle contractions, and others, which can improve patients' life quality. The acetylcholinesterase inhibitors (AChEI) can augment acetylcholine levels and reduce symptoms by improving the synapses, but cannot avoid brain damage. Restoration of the cholinergic system is also an alternative drug therapy [66].

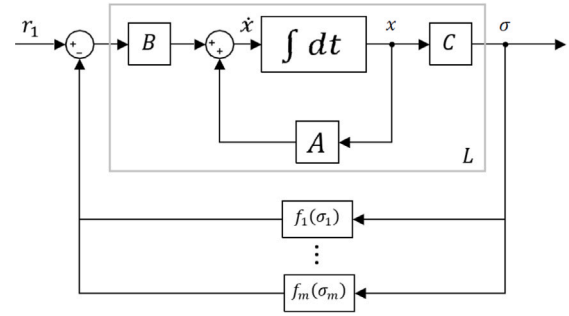


**Fig. 1.** Block diagram of the MIMO Lurie system.

Considering the model adopted in this work, which is the Hopfield neuron, the treatment above are related to the restoration of synapse function which, in our model, is not possible. In fact, it is supposed that those parameters are affected by disturbances, that is, one cannot predict neither influence their values. The approach in the present paper is by direct neural stimulation, that is, electrical signals are used to change the neural potential. There are several interventions of this type, which could be invasive, using for example electrodes, and non-invasive, using for example EEG. Brain computer interfaces (BCI) have been studied in the last decade for neurodegenerative diseases (which include AD) [69,70]. The objective is to collect real time brain signals, that could be used to move cursors in computers, prosthetic limbs, among others. However, this approach only collect signals from the neurons. In order to influence the neuron dynamics, the approach should be the adaptive deep brain stimulation (aDBS) [71], in which signals are delivered to the neurons only when needed. This approach is more like the one proposed in the present paper, which also include feedback control systems and can be applied in cognitive disorders.

### 2.2. Lurie control system

The Lurie problem (LP), also known as the absolute stability problem [39], is a classical nonlinear control problem in which one searches for necessary and sufficient conditions for closed-loop global asymptotic stability (GAS) with a nonlinear function $f$ with the graph belonging to a sector of the first and third quadrants of the plane, that is, $k_1\sigma^2 \leq \sigma f(\sigma) \leq k_2\sigma^2$, where $k_1, k_2 > 0$. A Lurie control system, which can be single-input-single-output (SISO) [52] or multiple-input-multiple-output (MIMO) [51] is represented in Fig. 1, which shows a Lurie MIMO control system with a nonlinear part represented by the vector of functions $f = (f_1, f_2, \ldots, f_m)$ and a linear part (L) in state-space representation. All the functions $f_j$ also belong to a sector.

The system of nonlinear differential equations describing the block diagram in Fig. 1 is [44,51]:

$$\begin{cases} \dot{x} = Ax - Bf(\sigma) + Br_1, \\ \sigma = Cx, \end{cases} \tag{1}$$

where $x \in \mathbb{R}^n$ is the state vector, $A \in \mathbb{R}^{n\times n}$ is Hurwitz (a matrix with all eigenvalues with negative real part), $B \in \mathbb{R}^{n\times m}$, $C \in \mathbb{R}^{m\times n}$ and $f = [f_1, f_2, \ldots, f_m] \in \mathbb{R}^m$ is a vector of unknown but fixed functions and $\sigma \in \mathbb{R}^m$. The nonlinearities $f_j(\sigma_j)$ are continuous and restricted to a sector, like the hyperbolic tangent function or other sigmoidal type functions that appear in an artificial neuron. In order to determine whether a system of this type is stable for all nonlinear functions in a sector (as one assumes that they are unknown), there are some sufficient conditions, like the Popov criteria [44]. Aizermann conjectured that if all the linear functions in the sector stabilize the closed-loop system, it would be stable for all functions in the sector, but this conjecture was proved false. A necessary and sufficient condition on the other hand is yet to be discovered [44].

### 2.3. HNN and its relationship with LP

Hopfield Neural Networks (HNN) are recurrent neural network which are described by a system of nonlinear differential equations. In 1982, Hopfield proposed the first version of the network [72], this being for the discrete case, and in 1984, the continuous model [7] was proposed [73], which is represented by Eq. (2):

$$C_i \frac{du_i}{dt} = -\frac{u_i}{R_i} + \sum_{j=1}^{n} T_{ij} V_j + I_i, \qquad i = 1, 2, \dots, n, \tag{2}$$

where $C \in \mathbb{R}^n$ is the vector of capacitances, $u \in \mathbb{R}^n$ is the state, $R \in \mathbb{R}^n$ is the vector of resistances, $T \in \mathbb{R}^{nxn}$ is the interconnection matrix, $I \in \mathbb{R}^n$ is the vector of external inputs (currents), and $V_j = g_j(u)$ are the neural output voltages. For an artificial neuron, the functions $g_i : \mathbb{R} \to [-1, 1]$ are called activation functions. In discrete HNN, the activation function assumes only $-1$ or 1 values. In the continuous case, it assumes continuous values and typically are Lipschitz continuous, $g_i(u)u > 0$ for all $u \neq 0$, $g_i(0) = 0$ and are strictly monotonically increasing [74]. For HNN, typically are hyperbolic tangent functions, as used is this paper.

In [7], Hopfield studied the network stability of Eq. (2) and defined the computational power function presented in Eq. (3):

$$E(V) = -\frac{1}{2} \sum_{i=1}^{n} \sum_{j=1}^{n} T_{ij} V_i V_j - \sum_{i=1}^{n} V_i I_i + \sum_{i=1}^{n} \frac{1}{R_i} \int_0^{V_i} g_i^{-1}(s) ds. \tag{3}$$

also known as the energy function. As the network state evolves, the energy function along the state trajectory must decrease. In fact, it was shown that $\frac{dE}{dt} < 0$ if the weight matrix $T$ is symmetric and if no neuron feeds itself back. On the other hand, this energy function can have several local minima, which means that $E$ is not always a Lyapunov function. In applications of HNN, generally the local minimum are unknown, and one possible application is to use HNN to find experimentally those minima [44]. The works [44,47] show that HNN is a special case of Lurie system. Briefly, it is observed that Eq. (2), after some changes of variables, can take the following form:

$$\frac{dx_i}{dt} = -d_i x_i + \sum_{j=1}^{n} b_{ij} f_j(x_j). \tag{4}$$

which is a Lurie system. This means that a HNN can be absolutely stable under certain conditions.

One of the main functions of HNN is associative memory, also known as content addressable memory. This means that in order to retrieve information from that, a similar information is presented to the network, which retrieves the most similar. In this way, an associative memory has a natural robustness [54]. Some associative memories are implemented such that the stored pattern are stable states of the network. Other implementations store the patterns in other ways, and only one equilibrium point, which must be GAS is present [54]. In the present paper, it is adopted this last type of associative memory, that is, with only one GAS equilibrium point.

HNN can be implemented in digital computers (von Neumann architecture) as programs, but in many applications, analog electronic implementation is more advantageous [73,75]. One of the simplest analog implementations is by means of FPAA [76], which is a network of field-programmable reconfigurable analog blocks (CABs) containing amplifiers, transistors, current mirrors and configurable resistances and many others. Several Hopfield neurons could be implemented in a single CAB. Communications between neurons, with different weights, could also be implemented. It is common to use those HNN for solving optimization problems [24] and NP-Hard Problems [76] by configuring the network (interconnection matrix) in such a way that the energy function is similar to the cost function of the optimization problem which one wants to solve. The HNN evolves by minimizing energy, which tends to reach the optimal solution. Due to the approximations involved, the reached solution is suboptimal. Those FPAA could also be used to solve optimization problems by means of Ising networks [76], which have similar energy functions, but very different implementations (by means of oscillators).

Several different types of dynamics can be programmed in a HNN. In order to be used in optimization, a single GAS equilibrium point should also be imposed by the choice of parameters, which is also the case for some types of associative memory. In other cases, the presence of bifurcations, strange attractors and chaos are desirable [77]. Those different dynamic behaviors have to do with the type of activation function. Recently, research papers presented HNN implemented using memristor, which is an electronic component first constructed in 2008, though predicted in 1970 by Leon Chua [36]. The memristor dynamics is ideal to simulate synapses, as it is a programmable conductance (memductance) that can be changed by sequence of pulses. The synaptic weights could be on-line programmed in the phase of training the HNN [78]. Another advantage of memristors is the capacity to be miniaturized at the nanoscale size due to its high integration possibility and low power consumption. The chaotic dynamics that could be induced in those memristor based HNN could be used to generate very secure public keys in cryptography. Other advantages of using HNN for computations are the possibility of parallelism, fault tolerance, real time learning and resistance to noise [73]. A more detailed explanation with implementation of this network via an electronic circuit can be found at [78,79]. Other implementations using CMOS technology, which also have high integration capacity and low power consumption are well developed [75].

### 2.4. Time-delayed HNN

Both biological neural networks, notably those affected by some disease (like AD), and analog hardware implemented HNN are affected by time-delays, as well as parameters uncertainties, noise and other disturbances [80]. Then, a more adequate model for HNN operating in adverse conditions would be:

$$\dot{x}_i(t) = -d_i x_i(t) + \sum_{j=1}^{n} a_{ij} f_j(x_j(t)) + \sum_{j=1}^{n} b_{ij} f_j(x_j(t-\tau)). \tag{5}$$

It is well known in the System Theory literature that time-delays degenerates robustness of stability [41]. This particularly hinders the performance of HNN as optimizers and associative memories, as the global stability could be destroyed.

A time-delayed HNN can be studied with the tools of Time-Delayed Lurie Control System [44]. Dynamical systems with time-delays should be described by functional differential equations, which are infinite dimensional dynamical systems similar to partial differential equations [81]. On the other hand, in the majority of applications, well known mathematical methods used for systems of ordinary differential equations (ODE) can be used. In the particular case of linear time-delayed systems, tools like Laplace transform and the formula of variation of constants in the search for solutions are useful, moreover in this case there are infinite characteristic roots. Methods in the frequency domain can also be used in stability analysis [81]. For the case o nonlinear time-delayed systems, tools like Lyapunov function and linear matrix inequalities (LMI) can also be used.

### 2.5. Robust control theory

Robust control theory, as the other control theories, are prescriptive sciences, that is, it aims not only in analyzing natural or man-made system, but also modifying them in order to satisfy specifications. In the course of the development of robust control theory, the works of Doyle [40], Skogestad [41] and Zhou [42] are highlighted. They introduced and improved techniques such as linear fractional transformations (LFT), $\mathcal{H}_\infty$ control, mixed-sensitivity and $\mu$-analysis and synthesis, to name a few. In the present paper, one applies robust control theory in order to mitigate/cure the memory loss in a natural

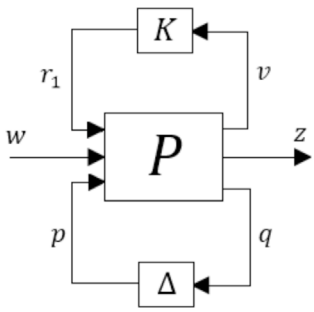


**Fig. 2.** Block diagram of a Robust Control System.

(brain) or man-made associative memory system (hardware implemented HNN) by means of designing controllers acting directly in the neural network, as presented in Fig. 9. Those controllers modify the system dynamics in order to become more robust, without losing the associative memory capacity. The GAS equilibrium point of the HNN would then persists in more adverse conditions.

A linear time-invariant robust control system can be represented by the block diagram in Fig. 2, where $P$ is the extended plant, which also contains robustness and performance specifications, $K$ is the controller to be designed and $\Delta$ represents the uncertainties of the system, which includes nonlinearities and time-delays. The input $w$ represents external references and disturbances and the output $z$ are the signals used to calculate the performance measures. The designer role is to provide robustness of stability and performance by means of an adequate controller $K$. All the three systems $P$, $K$ and $\Delta$ are linear dynamical systems, but the last one is unknown except for upper bounds in the norms. An important robustness measure is the structured singular value (SSV), which the definition is the following:

**Definition 1** (*[42]*). Given the system $M$, which is the closed-loop equivalent of the systems $P$ and $K$, and the structured family of matrices $\Delta$ such that $\|\Delta\|_\infty \leq 1$, the structured singular value SSV, also denoted by $\mu$, is a real non-negative function of the frequency $\omega$ defined by:

$$\mu_\Delta(M) \triangleq \frac{1}{min_\Delta\{\bar{\sigma}(\Delta)|det(I - M\Delta) = 0\}}, \tag{6}$$

Normally, $\Delta = diag\{\Delta_i\}$ is a block diagonal matrix such that $\bar{\sigma}(\Delta_i) \leq 1$, where $\bar{\sigma}$ is the maximum singular value and $\|\cdot\|_\infty$ is the $H_\infty$ norm of the system. Some of the blocks of $\Delta$ may be repeated and some may be restricted to be real. If no such structured $\Delta$ exists, then $\mu(M) = 0$.

The system $K$ is obtained at the outset of the design phase. After calculating $M$, $\mu_\Delta(M)$ is determined for the particular family of uncertainties and if $\mu_\Delta(M) < 1$ for each frequency $\omega$, the robustness of stability is guaranteed. Several methods exist for designing the controller $K$, as for example the Riccati based or the LMI based $H_\infty$ approach [41]. On the other hand, they do not guarantee robustness and if $K$ do not pass the test of $\mu_\Delta(M) < 1$, the design should be repeated. The $\mu$ synthesis, also called DK-iteration, are used if one wants to obtain a controller that guarantee robustness, which is the design method used in the present paper. In [51], a detailed design of robust controllers for a Lurie system with a particular class of nonlinearities is performed. Algorithm 1 and Theorems 1 and 2, which will be presented in Section 3.3, make use of these concepts for the design of the controllers for the ALD and IALD models. In [18,51,53], the authors develop design techniques based in DK-iteration that provide larger robustness margins for Lurie systems (in particular time-delayed HNN) if compared to other methods in the literature. One of the objectives of the present paper is to apply those innovative techniques to guarantee that analog hardware implement HNN under adverse conditions or AD affected biological networks could perform well, healing memory loss.

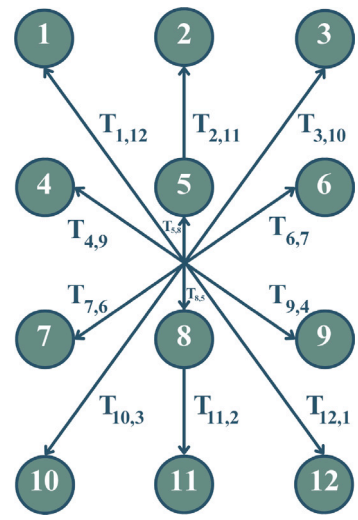


**Fig. 3.** Network architecture to simulate a 3 × 4 digital sign, where each circle in the figure represents a Hopfield neuron.

## 3. Alzheimer-like disease model

The Alzheimer-like disease model (ALD) is a mathematical model of memory loss conceptualized in [17,18] that could be useful for modeling memory loss in biological or artificial HNN. As seen in Section 2.1, the synaptic loss hypothesis for cognitive decline of the network is addressed. In the present paper, as a case study, the ALD can have any number of neurons, which are trained to remember a specific letter, which is represented by a digital signal of 3 × 4, shown in Fig. 3. A system of ordinary differential equations of 12th order shown in Eq. (7) characterizes the mathematical model of ALD:

$$\dot{u}_i = -d_i u_i + \alpha T_{i,n-(i-1)} \tanh(u_{n-(i-1)}) + I_i. \tag{7}$$

### 3.1. The choice of ALD parameters

In bullets, the model's parameters in Eq. (7) are presented, as well as the method of choice and/or justification for the value of each parameter:

- $d$ — The parameter $d$ is the vector formed of fixed positive constants, since it is a condition to be a HNN. We choose $d_i = 1$ for simplicity (see Remark 1).
- $n$ – The parameter $n$ indicates the number of neurons in the network. For example, to have 12 neurons, take $n = 12$ and $i = 1, 2, \ldots, 12$.
- $T$ — The parameter $T$ represents the network's weight matrix. In order to get a stable network (as described in Section 2.3), one chooses the matrix $T$ symmetric and without self-feedback of each neuron, that is, with zeros in the main diagonal. We select $T$ like in Eq. (8) for simplicity. In Fig. 5(a), it is presented the synapses in the biological neuron and the corresponding weights in the HNN. Disturbances in those weights represents the effect of AD (see Fig. 5(b)). In this situation, the values $T_{ij}$ can be assumed to be the strength of the synaptic connection. The smaller the value of $T_{ij}$ (or the multiplicative factor $\alpha$), the greater the strength of the ($S$) connection between the neurons (healthier memory).
- $\alpha$ — The parameter $\alpha$ is like a potentiometer for controlling the weight matrix. Here, the parameter $\alpha$ is included, differing slightly from that presented in [17,18] in order to vary all the weights by the same amount. Once the weight matrix $T$ is determined and fixed, all that needs to be done is to change the values of the coefficient $\alpha$ for the network to go from a healthy condition

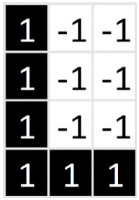


**Fig. 4.** Letter L (3 × 4) digital sign: $I = [1, -1, -1, 1, -1, -1, 1, -1, -1, 1, 1, 1]$.

to a memory failure. It is through this parameter that we identify the maximum range for the network to have a good memory. By experimental exploration, it was found that the lower the value of $\alpha$, the better the memory performance. Thus, $\alpha = 0.005$ was selected for a healthy memory and 0.5 for a sick memory with the possibility of a cure. For values above 0.6 it was noted that MATLAB was unable to synthesize a healer controller.

- $I$ — The component bias, represented in Eq. (7) by $I$, must be treated as the pattern stored in memory to be recalled. A similar approach is taken by [54], where it is suggested how to treat the components $I$ and $u$ of Eq. (7). This type of associative memory has a single GAS equilibrium point, and could be treated as a Lurie system. In this paper, the letter L is used for the simulations. At the end, simulations with several letters are performed. In vector form, one has: $I = [I_1, I_2, I_3, I_4, I_5, I_6, I_7, I_8, I_9, I_{10}, I_{11}, I_{12}]$. Note, in Fig. 4, that 1 represents black and −1 represents white.
- $u^0$ — The initial conditions of the state vector $u$ are the points from which the network initiates recall, provided by the vector $u^0 = [u_1^0, u_2^0, u_3^0, u_4^0, u_5^0, u_6^0, u_7^0, u_8^0, u_9^0, u_{10}^0, u_{11}^0, u_{12}^0]$. Any value can be chosen as the initial condition.

**Remark 1.** In this model, the time constant $RC$ of the Hopfield model in Eq. (2) was normalized to 1 s for simplicity. However, when comparing the results with biological systems, such as neuronal membrane potentials, the relevant timescale is in milliseconds (ms). This is valid because the model can be established by proportional relationships between parameters, making the results directly applicable to systems with typical response times of 10 ms to 100 ms.

The next section shows the performance of the ALD model through computer simulations using Matlab® and Simulink®.

### 3.2. Simulation of the ALD

This simulation aims to show how ALD works as a healthy memory and then as a pathological memory (with AD). The selected input must be the letter L as in Fig. 4 and one uses the initial condition $u^0 = [0, 0.5, 0, -1, 0, 0.5, 0, 1, 1, -1, 1, 1]$.

#### 3.2.1. ALD for healthy memory

In order to have a healthy network, $T$ is adopted as in Eq. (8). Note that the weight matrix $T$ is symmetrical and no neuron feeds itself back. Upon scrutinizing the value of $\alpha = 0.005$, it becomes apparent that this numerical constant induces small weight magnitudes. Consequently, the network has a GAS equilibrium point, a phenomenon meticulously observed in the temporal response illustrated in Fig. 6(a).

$$T = \begin{bmatrix} 0 & 0 & 0 & 0 & 0 & 0 & 0 & 0 & 0 & 0 & 0 & 1.5 \\ 0 & 0 & 0 & 0 & 0 & 0 & 0 & 0 & 0 & 0 & 1.5 & 0 \\ 0 & 0 & 0 & 0 & 0 & 0 & 0 & 0 & 0 & 1.5 & 0 & 0 \\ 0 & 0 & 0 & 0 & 0 & 0 & 0 & 0 & 1.5 & 0 & 0 & 0 \\ 0 & 0 & 0 & 0 & 0 & 0 & 0 & 1.5 & 0 & 0 & 0 & 0 \\ 0 & 0 & 0 & 0 & 0 & 0 & 1.5 & 0 & 0 & 0 & 0 & 0 \\ 0 & 0 & 0 & 0 & 0 & 1.5 & 0 & 0 & 0 & 0 & 0 & 0 \\ 0 & 0 & 0 & 0 & 1.5 & 0 & 0 & 0 & 0 & 0 & 0 & 0 \\ 0 & 0 & 0 & 1.5 & 0 & 0 & 0 & 0 & 0 & 0 & 0 & 0 \\ 0 & 0 & 1.5 & 0 & 0 & 0 & 0 & 0 & 0 & 0 & 0 & 0 \\ 0 & 1.5 & 0 & 0 & 0 & 0 & 0 & 0 & 0 & 0 & 0 & 0 \\ 1.5 & 0 & 0 & 0 & 0 & 0 & 0 & 0 & 0 & 0 & 0 & 0 \end{bmatrix}. \tag{8}$$

Henceforth, a healthy memory endowed with any arbitrary memory inception (initial condition $u^0$), the network exhibits the prowess to recollect the letter L. This attribute finds visual representation in Fig. 6(b), showing the network's state trajectory in the process of remembering the letter L through a digital sign. (see Fig. 6).

#### 3.2.2. ALD with memory failure

The weakening of the synaptic connection is here simulated, that is, AD memory failure. One increases the value of the weights by 100 times, i.e., it is adopted $\alpha = 0.5$. In the network, the equilibrium point changes, as shown in the temporal response of Fig. 7(a), which represents memory loss. It is noteworthy that the network maintains its stability, however, it now exhibits other equilibrium point (bifurcation). The depiction through the digital sign in Fig. 7(b) unveils the network's impossibility to accurately remember the letter L.

Finally, one puts $\alpha = 200$ in order to simulate unrecoverable memory failure. Observe in Fig. 8(a) the network's novel equilibrium points, while the digital sign portrayed in Fig. 8(b) starkly illustrates its complete forfeiture of memory, rendering it incapable of recollecting the letter L.

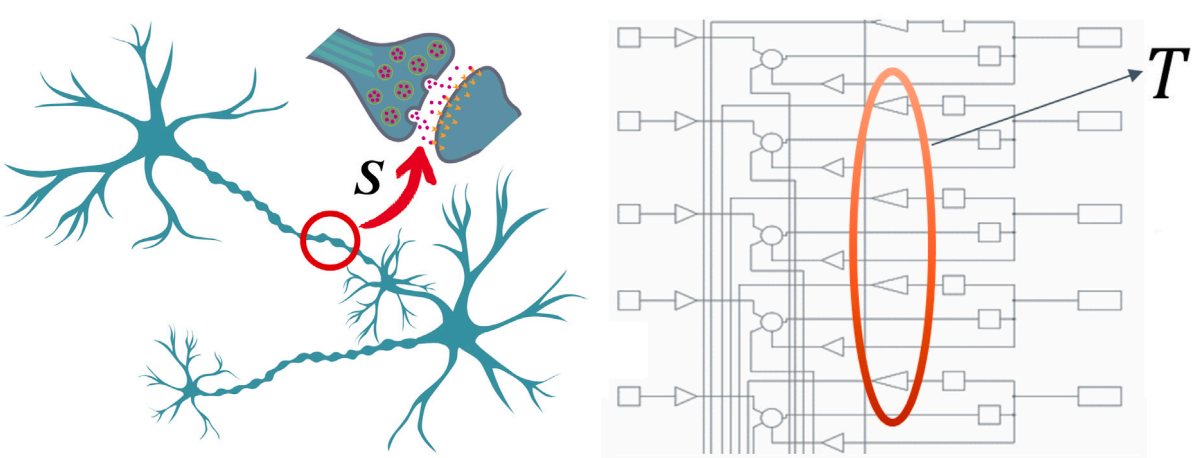


(a) Synapse between neurons. $S$ is strength of the connection.

(b) ALD model via Simulink®.

**Fig. 5.** Relation between synapses (S) and weights of artificial network (T): the lower the weight (T) the higher the synaptic strength (S).

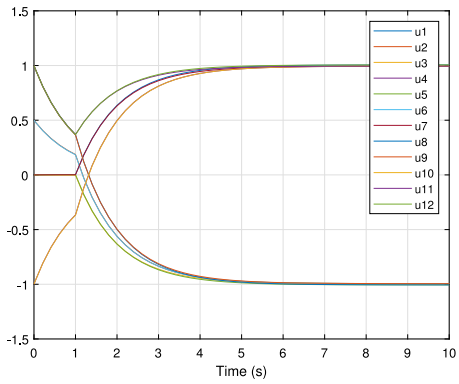


(a) Healthy network temporal response: each curve represents the temporal response of the $u_i - th$ neuron in the Hopfield model, where the vertical axis represents the amplitude of the response, and the horizontal axis represents time (see Remark 1).

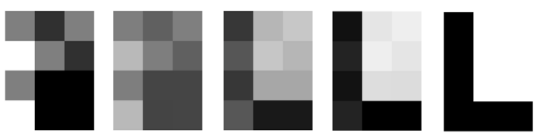

(b) Temporal evolution of the memory of the letter L via digital sign.

**Fig. 6.** ALD healthy.

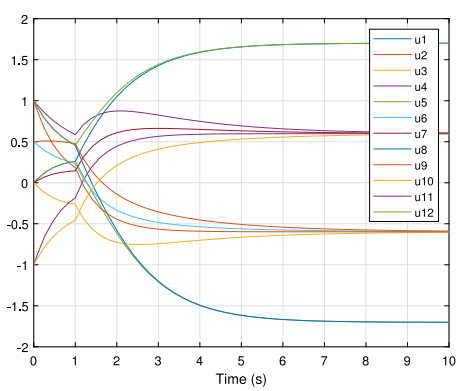


(a) Temporal response for network with partial memory loss.

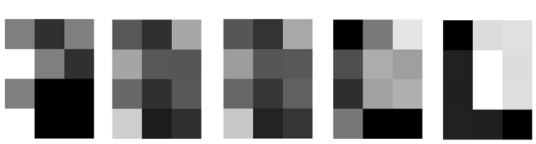

(b) Temporal evolution of the letter L for network with partial loss of memory via digital sign.

**Fig. 7.** ALD with failure memory.

### 3.3. Control/healing of the ALD

In this section, the healing of ALD with memory failure is performed by applying Theorem 1 and Algorithm 1 to design the controller and, after that, performing a simulation. This theorem together with $\mu$-synthesis (via DK-iteration), offers avenues for crafting a controller that secures the robustness of stability and performance for the network in Eq. (7). The objective is to rectify the memory lapse within the network, thereby emulating a form of remedy within the computationally simulated ailment. The symbol $\mu_\Delta$ denotes the singular structured value [40]. The synthesis method of robust controllers, known as DK-iteration, introduced by [82], combines $H_\infty$ design with $\mu$-analysis.

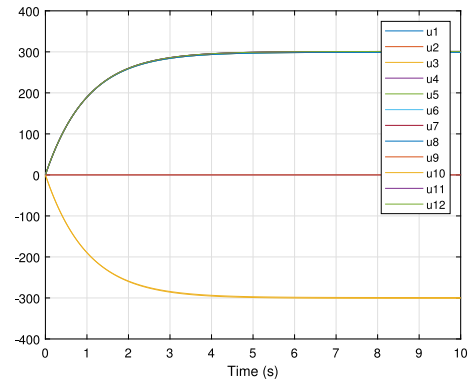


(a) Temporal response of the worst case of memory loss.

(b) Complete loss of memory via digital sign.

**Fig. 8.** ALD with the worst case.

**Theorem 1** ([51]). *Given a controller $K(s)$ and $[0, k_j]$ the sectors that include $f_j \in F_{(0,k_j]}$ for $j = 1, \ldots, m$, then the system in Eq. (1) with the controller $K(s)$ in feedback loop is robustly stable for some class of functions and have robustness of performance, if and only if:*

$$\mu_{\tilde{\Delta}}[F_U(P, K)] < 1, \quad \forall\omega, \tag{9}$$

*where:*

$$P(s) = \begin{bmatrix} -C(sI - A_0)^{-1}B & -I & -C(sI - A_0)^{-1}E \\ C(sI - A_0)^{-1}B & I & C(sI - A_0)^{-1}E \\ C(sI - A_0)^{-1}B & 0 & C(sI - A_0)^{-1}E \end{bmatrix}, \tag{10}$$

$$F_U(P, K) = M(s) = \begin{bmatrix} M_{11}(s) & M_{12}(s) \\ M_{21}(s) & M_{22}(s) \end{bmatrix}, \tag{11}$$

$$M_{11} = I + C(sI - A_0)^{-1}BK(s)(-I)[I + C(sI - A_0)^{-1}BK(s)]^{-1},$$

$$M_{12} = C(sI - A_0)^{-1}E + C(sI - A_0)^{-1}BK(s)(-C)(sI - A_0)^{-1}E[I + C(sI - A_0)^{-1}BK(s)]^{-1},$$

$$M_{21} = C(sI - A_0)^{-1}E + C(sI - A_0)^{-1}BK(s)(-I)[I + C(sI - A_0)^{-1}BK(s)]^{-1},$$

$$M_{22} = C(sI - A_0)^{-1}E + C(sI - A_0)^{-1}BK(s) - C(sI - A_0)^{-1}E[I + C(sI - A_0)^{-1}BK(s)]^{-1},$$

*with:*

$$A_0 = \begin{bmatrix} a_{11} - \sum_{j=1}^{m} b_{1j}\frac{k_j}{2}c_{j1} & \cdots & a_{1n} - \sum_{j=1}^{m} b_{1j}\frac{k_j}{2}c_{jn} \\ \vdots & \ddots & \vdots \\ a_{n1} - \sum_{j=1}^{m} b_{nj}\frac{k_j}{2}c_{j1} & \cdots & a_{nn} - \sum_{j=1}^{m} b_{nj}\frac{k_j}{2}c_{jn} \end{bmatrix},$$

*and:*

$$E = \begin{bmatrix} -\frac{k_1}{2}b_{11} & \cdots & -\frac{k_m}{2}b_{1m} \\ \vdots & \ddots & \vdots \\ -\frac{k_1}{2}b_{n1} & \cdots & -\frac{k_m}{2}b_{nm} \end{bmatrix}.$$

**Proof.** It can be found in [51], Theorem 8.

The Algorithm 1, derived from the work [51], delineates the prescribed methodologies and uses the Matlab® functions for the implementation of the DK-iteration. The conceptual underpinnings of this iterative process is also found in [41]. Note that the algorithm provides a matrix of controllers $K = diag[K_1(s), \dots, K_{12}(s)]$, which must be placed in the network according to Fig. 9. In comparison to the network in Fig. 5(b), a feedback loop (in red) is created.

**Algorithm 1 [17,18]:** DK-iteration

**Result:** A stabilizing controller $K(s)$ that guarantees robustness of performance.

Find the generalized nominal $P(s)$ as in Eq. (10) and the matrix $\tilde{\Delta}$;

Start with an initial guess for $D$, usually set $D = I$.

**While** ($\mu_{max} \geq 1$) or a prespecified maximum iteration number is not reached

**Step K**: Synthesize a $\mathcal{H}_\infty$-controller $K(s)$, that is, solve $min_K ||DF_U(P,K)D^{-1}||_\infty$ with fixed $D(s)$. Use Matlab® function $[K, \gamma, Info] = hinfsyn(DPD^{-1})$

**Calculate** $M(s)$, as in Eq. (11)

**Step D**: Find $D(j\omega)$ that minimizes $\bar{\sigma}(DMD^{-1}(j\omega))$ in each frequency, with fixed $M$. Use Matlab® function $mussvunwrap(Info)$

**Adjust** the magnitude of each element of $D(j\omega)$ to a stable and minimum phase transfer function $D(s)$. Use Matlab® function $fitfrd$

**Calculate** $\mu_{max}$, where $\mu_{max}$ is equal to upper bound of $\mu$. Use Matlab® function $mussv(frdModel, BlockStructure)$

**endWhile**

This simulation shows the controller designed by using Theorem 1 and Algorithm 1 correcting the memory failure presented by Fig. 7. The same input and initial condition of the simulation of Section 3.2 are used now. The nonlinearity components are denoted by $f_i \in F_{(0,2]}$, where $i$ ranges from 1 to 12, with a variation range of (0,2] for the parametric uncertainty in the mapping of the nonlinearity in the LP. It is noteworthy that Theorem 1 refers to the system in Eq. (1). Therefore, it becomes imperative to incorporate the parameters $A$, $B$, and $C$ derived from the HNN within the computational model of the ailment, in accordance with Eq. (7). Under these circumstances, one must make the presumption:

$$A = diag[-1, \dots, -1]_{(12\times12)}, \quad B = T,$$

$$\tilde{\Delta} = \begin{bmatrix} \delta_1 & & & & \\ & \ddots & & 0 & \\ & & \delta_{12} & & \\ & 0 & & \delta_{13} & \delta_{14} \\ & & & \delta_{15} & \delta_{16} \end{bmatrix}, \quad C = \begin{bmatrix} 0 & & 1 \\ & \iddots & \\ 1 & & 0 \end{bmatrix}_{(12\times12)}.$$

**Remark 2.** In the $\tilde{\Delta}$ matrix one has the nonlinearities $f$ of the Lurie type system replaced by the uncertainties $\delta_1, \dots, \delta_{12}$, and the uncertainties $\delta_{13}$, $\delta_{14}$, $\delta_{15}$ and $\delta_{16}$ are used to ensure robustness of performance (see [41] for more information).

**Remark 3.** After the design of the controllers, the simulation is performed in the Simulink® (via ode45 Dormand-Prince method with variable-step) using the nonlinearities of the network in Eq. (7), that is, the hyperbolic tangent. The coefficient $\alpha$ is equal to 0.5.

In the first iteration, $\mu_{max} = 1.000$ was found. Fig. 10 shows the upper bound of $\mu$ reaching 1. This value of $\mu$ does not satisfy the condition (9). In the second iteration, as shown in Eq. Fig. 11, $\mu_{max} = 0.0067$

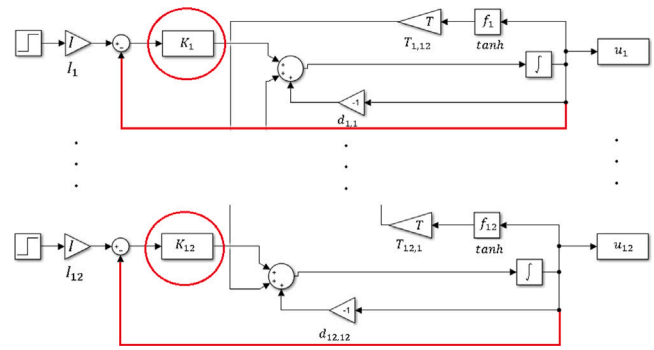


**Fig. 9.** Simulink® simulation of the ALD with controllers inserted in a feedback loop neuron by neuron.

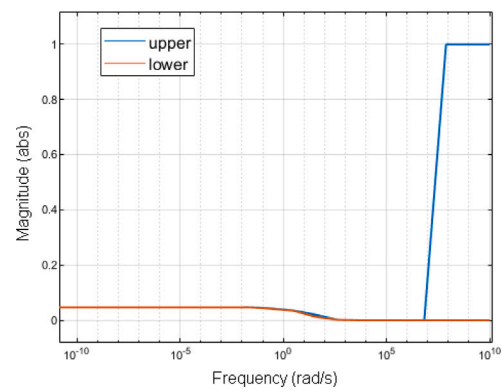


**Fig. 10.** Condition (9) not satisfied:the curve illustrates the values of $\mu$ in the frequency domain, showing that for certain frequencies, $\mu = 1$.

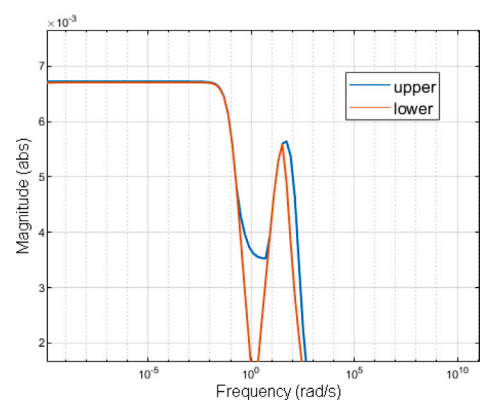


**Fig. 11.** Values of $\mu$ that satisfy the condition (9) of Theorem 1: the values of $\mu$ are less than 1 in the frequency domain.

was obtained. This value satisfies the condition in Eq. (9) of Theorem 1. Therefore, one has a matrix of controllers, $K = diag[K_1(s), \dots, K_{12}(s)]$, that guarantee robustness of stability and performance for the network in Eq. (7).

Utilizing the designed controllers within the network, the temporal reaction subsequent to the input can be observed in Fig. 12(a). It is evident that the response in this instance exhibits rapid behavior, with the transient phase escaping detection. Conclusively, as indicated by Fig. 12(b), the reinstatement of network memory becomes apparent. At instances where networks encounter severe memory impairments, exemplified by the scenario depicted in Fig. 8(b), the synthesis of a controller to rectify the issue of memory deterioration proved unattainable.

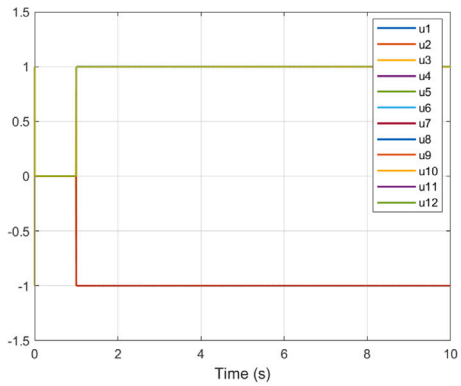


(a) Temporal response of the network with controllers.

(b) Temporal evolution of the letter L in digital sign for network controlled.

**Fig. 12.** Healed ALD.

## 4. The Improved Alzheimer-Like Disease Model

The Improved Alzheimer-Like Disease Model (IALD) is based on the ALD model presented in Section 3 with the inclusion of time-delays. The justification for this inclusion is the following: the presence of AD promotes instabilities [6], and it is well known in the control literature [41] that time-delays in closed-loop systems reduces the robustness of stability. In the case HNN, time-delays could be worsened in adverse environmental conditions. For the construction of this model, one starts from a delayed Lurie control system:

$$\begin{cases} \dot{x} = Ax - Bf(\sigma) + F_\tau x(t-\tau) + Br_1, \\ \sigma = Cx, \end{cases} \tag{12}$$

where $x \in \mathbb{R}^n$ is the state vector, $\tau > 0$ is a real constant delay, $f(\sigma) \in \mathbb{R}^m$ and $\sigma \in \mathbb{R}^m$. One has the fixed matrices $F_\tau \in \mathbb{R}^{n\times n}$, $B \in \mathbb{R}^{n\times m}$, $C \in \mathbb{R}^{m\times n}$ and $A \in \mathbb{R}^{n\times n}$ is Hurwitz and fixed. To illustrate the insertion of the delay in the system Fig. 1, the block diagram should be Fig. 13 with individual neurons being modeled in Eq. (13):

$$\begin{aligned} \dot{u}_i(t) &= -d_i u_i(t) + \alpha T_{i,n-(i-1)} \tanh[u_{n-(i-1)}(t)] + \\ &+ \beta F_{i,i} u_{n-(i-1)}(t-\tau) + I_i. \end{aligned} \tag{13}$$

where $u \in \mathbb{R}^n$, $d = diag[1,\dots,1]_{n\times n}$, $T \in S\mathbb{R}^{n\times n}$, that is, a symmetric matrix as in Eq. (8), $F = diag[1,\dots,1]_{n\times n}$, $\alpha, \beta, \tau \in \mathbb{R}$ and $I \in \mathbb{R}^n$. The objective of this model with delay is to present a biological network with AD or a HNN operating in adverse conditions, where the delay can have the function of modeling a greater or lesser deterioration of memory with greater sensitivity. Returning to the case study presented in this paper, in order to have a model with 12 neurons, one uses $n = 12$ and $i = 1, 2, 3, \dots, 12$. Therefore, in Eq. (14), one has a 12th order system of differential equation that is used for the simulations:

$$\begin{cases} \dot{u}_1(t) = -u_1(t) + 1.5\alpha\tanh(u_{12}) + \beta u_{12}(t-\tau) + I_1 \\ \dot{u}_2(t) = -u_2(t) + 1.5\alpha\tanh(u_{11}) + \beta u_{11}(t-\tau) + I_2 \\ \dot{u}_3(t) = -u_3(t) + 1.5\alpha\tanh(u_{10}) + \beta u_{10}(t-\tau) + I_3 \\ \dot{u}_4(t) = -u_4(t) + 1.5\alpha\tanh(u_9) + \beta u_9(t-\tau) + I_4 \\ \dot{u}_5(t) = -u_5(t) + 1.5\alpha\tanh(u_8) + \beta u_8(t-\tau) + I_5 \\ \dot{u}_6(t) = -u_6(t) + 1.5\alpha\tanh(u_7) + \beta u_7(t-\tau) + I_6 \\ \dot{u}_7(t) = -u_7(t) + 1.5\alpha\tanh(u_6) + \beta u_6(t-\tau) + I_7 \\ \dot{u}_8(t) = -u_8(t) + 1.5\alpha\tanh(u_5) + \beta u_5(t-\tau) + I_8 \\ \dot{u}_9(t) = -u_9(t) + 1.5\alpha\tanh(u_4) + \beta u_4(t-\tau) + I_9 \\ \dot{u}_{10}(t) = -u_{10}(t) + 1.5\alpha\tanh(u_3) + \beta u_3(t-\tau) + I_{10} \\ \dot{u}_{11}(t) = -u_{11}(t) + 1.5\alpha\tanh(u_2) + \beta u_2(t-\tau) + I_{11} \\ \dot{u}_{12}(t) = -u_{12}(t) + 1.5\alpha\tanh(u_1) + \beta u_1(t-\tau) + I_{12}. \end{cases} \tag{14}$$

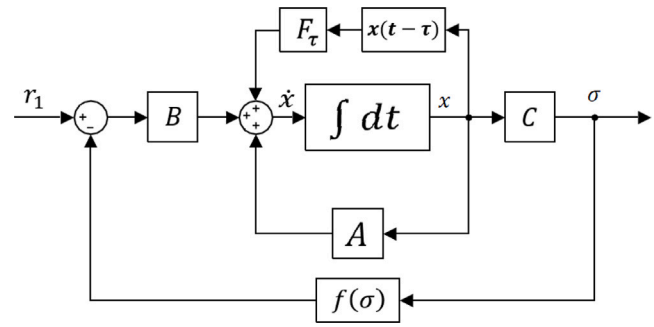


**Fig. 13.** Block diagram of the Lurie type system with delay.

### 4.1. The choice of IALD parameters

The parameters $d$, $n$, $T$, $\alpha$ and $I$ are as in Section 3.1. The new parameters for the network with delay (IALD) are described below:

- $F$ – The parameter $F$ is the delay weights matrix. For simplicity we chose $F = diag[1,\dots,1]_{n\times n}$. The values of $F$ can represent specific characteristics of a particular neuron, not having a connection between other neurons (see Fig. 13). If we choose values for the $F$ matrix other than 1, one can understand the matrix $F$ as a fine tuning.
- $\beta$ – The parameter $\beta$ is like a potentiometer for controlling the matrix of delay weights. The $\beta$ in (13) is as a coarse adjustment of the neuron.
- $\tau$ – The parameter $\tau$ is the value of the delay inserted in the internal processing of each neuron (see Fig. 13).

In the experimental explorations, we noticed the need to balance the values of $F$, $\beta$ and $\tau$ in order to insert some variation in the temporal response and keep the system stable. The idea is to use these parameters in order to be able to adjust the model to get responses that are closer to the real one (if one has real data to compare and adjust the model with). It is important to bear in mind that the variation limits of these parameters are set when the model becomes unstable or uncontrollable (MATLAB cannot synthesize a controller). In this paper, the set $F = diag[1,\dots,1]_{n\times n}$, $\beta = 0.24$ and $\tau = 4.5$ were used to demonstrate the functionality of the model and control.

### 4.2. Simulation of the IALD

First, the simulation and parameters for a IALD network are presented, which simulates a human memory with time-delay originated from AD. In the simulations, it is used the letter L for the memory to be remembered ($I = [1,-1,-1,1,-1,-1,1,-1,-1,1,1,1]$).

#### 4.2.1. IALD with time delay

To simulate a memory with only time delay, it was adopted in the IALD model $\alpha = 0.005$, $\beta = 0.24$, $\tau = 4.5$ e $T$ as the matrix in Eq. (8). The Fig. 14 shows the results of the simulations with these parameters. Even with delays, it is observed that the network can still remember the letter L. This situation represents AD in initial stage.

#### 4.2.2. IALD with memory failure

To simulate a memory failure, $\alpha = 0.5$, $\beta = 0.24$, $\tau = 4.5$ and $T$ as the matrix in Eq. (8) were adopted in the IALD model. Fig. 15 shows the performance of the model in Eq. (13), which simulates memory failure to remember the letter L. In this figure, in comparison with Fig. 7 the differences are noticeable. In Fig. 15(a), there is a greater imbalance of the curves compared to Fig. 7(a), as well as differences in the display of the signs.

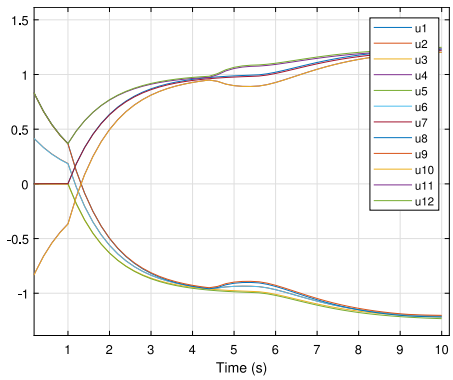


(a) Healthy IALD network response.

(b) Healthy IALD network sign.

**Fig. 14.** IALD healthy.

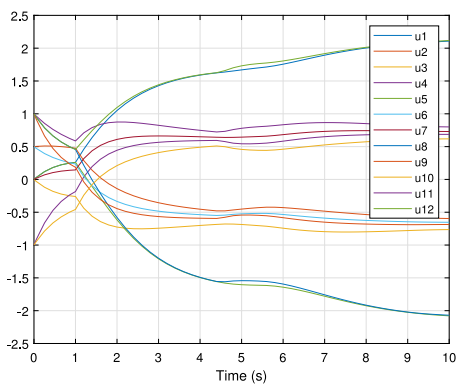


(a) Temporal response of the IALD network with memory failure.

(b) IALD sign with memory failure.

**Fig. 15.** IALD with memory failure.

### 4.3. Control/healing of the IALD

In the design of the controllers for the IALD, Theorems 1 and 2, and Algorithm 1, are used, in a similar way as done for the ALD model. The following theorem (presented as a conjecture in [51] and proved in [18]), provides a sufficient condition for the absolute stability of the system in Eq. (12), which is less conservative than the other theorems for the delay found in the literature.

**Theorem 2** ([18]). *Suppose that $f_j \in F_{[\underline{k}_j,\bar{k}_j]}$ for $j = 1, \dots, m$, and assume that $\bar{A}_{22,delay}$ with the delay term replaced by the Padé approximations of all order are stable. Then the system (12) is absolutely stable for some class of functions in the sector, if:*

$$\mu(\bar{A}_{22,k}(j\omega)) < 1, \quad \forall\omega, \forall k \in \mathbb{Z}^+, \tag{15}$$

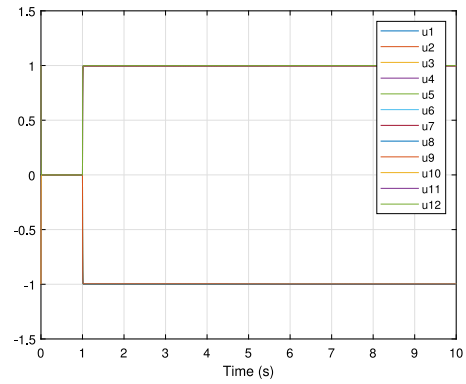


(a) Time response of the network with delay and with control.

(b) Network sign with delay and with control.

**Fig. 16.** IALD healed.

*where:*

$$\bar{A}_{22,delay} = C(sI - \bar{A}_0 - F_\tau e^{-\tau s})^{-1}\bar{E},$$

$$\bar{A}_{22,k}(j\omega) = C(j\omega I - \bar{A}_0 - F_\tau[k/k])^{-1}\bar{E},$$

*with:*

$$\bar{A}_0 = \begin{bmatrix} a_{11} - \sum_{j=1}^{m} b_{1j}(\frac{\bar{k}_j+\underline{k}_j}{2})c_{j1} & \dots & a_{1n} - \sum_{j=1}^{m} b_{1j}(\frac{\bar{k}_j+\underline{k}_j}{2})c_{jn} \\ \vdots & \ddots & \vdots \\ a_{n1} - \sum_{j=1}^{m} b_{nj}(\frac{\bar{k}_j+\underline{k}_j}{2})c_{j1} & \dots & a_{nn} - \sum_{j=1}^{m} b_{nj}(\frac{\bar{k}_j+\underline{k}_j}{2})c_{jn} \end{bmatrix},$$

*and:*

$$\bar{E} = \begin{bmatrix} -(\frac{\bar{k}_1-\underline{k}_1}{2})b_{11} & \dots & -(\frac{\bar{k}_m-\underline{k}_m}{2})b_{1m} \\ \vdots & \ddots & \vdots \\ -(\frac{\bar{k}_1-\underline{k}_1}{2})b_{n1} & \dots & -(\frac{\bar{k}_m-\underline{k}_m}{2})b_{nm} \end{bmatrix}.$$

*Where $a_{ij}$, $b_{ij}$ and $c_{ij}$ are coefficients of the matrices $A$, $B$ and $C$, respectively, and $[k/k]$ represents the Padé approximations of $k$th order.*

**Proof.** As the proof is large, see Theorem 21 in [18].

The controller designed for the IALD model corrects the memory failure presented in Figs. 15(a) and 15(b). In order to obtain the controller, one constructs matrices $P(s)$ and $M(s)$, using the term $(sI - \bar{A}_0 - Fe^{-\tau s})^{-1}$ from Theorem 2 with Padé approximation of order 3. To use this theorem, the IALD model must be treated as a Lurie control system, i.e., one adopts $A = -d$, $B = -\alpha T$, $F_\tau = \beta F$, $B_{r_1} = I$ and $f(\sigma) = tanh(u)$. In addition, $\underline{k}_j = 0$ and $\bar{k}_j = 2$ should be adopted, i.e., the nonlinearity is placed within the Lurie sector:

$$F_{[\underline{k}_j,\bar{k}_j]} := \{f_j | f_j(0) = 0, 0 < \sigma_j f_j(\sigma_j) \le 2\sigma_j^2, \sigma_j \ne 0\}. \tag{16}$$

Then, applying the conditions of Theorems 1 and 2 and running Algorithm 1 with 3 DK interactions, a controller satisfying the condition of Theorem 1 is obtained, correcting the memory failure of the IALD network. The obtained controller is inserted into a network in a similar way as shown in Fig. 9, which results in the memory performing well as presented in Fig. 16. Fig. 17 shows various simulations using different letters for network with 12 neurons. It can be seen that for the letters $I$ and $O$ it was not necessary to use the controller, as they did not have a memory fault. In addition, a different initial condition was applied to

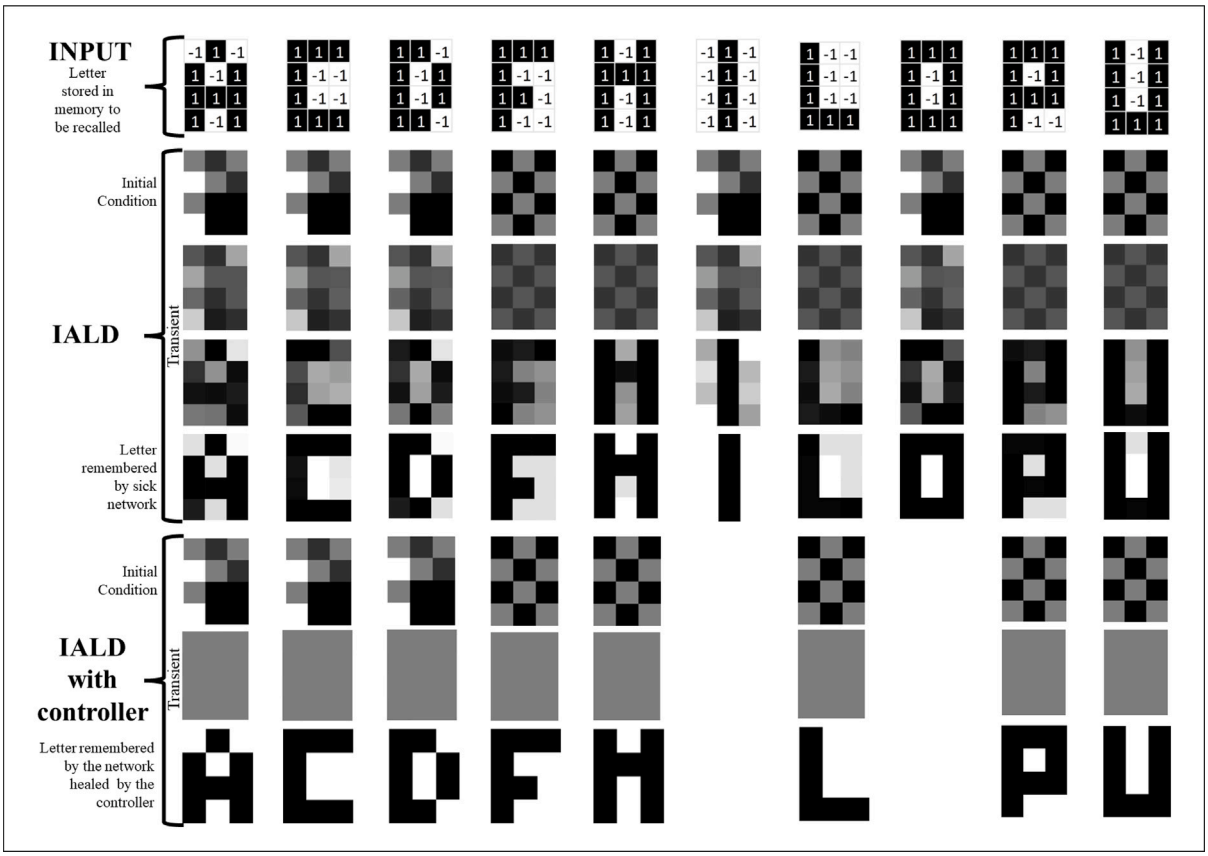


**Fig. 17.** Several simulations of the IALD model (13) with 12 neurons ($n = 12$).

the letters $F$, $H$, $L$, $P$ and $U$, also demonstrating the effectiveness of the IALD model and the controller. Finally, Fig. 18 shows simulations with the network using 30 neurons. The main purpose of this simulation is to show the scalability of the model for networks with larger numbers of neurons. When analyzing the simulation in detail, initial conditions for the letters G and Q were inserted with the letters themselves. Initially, after the transient, the memory does not return perfectly for the respective letters G and Q. Then, with the insertion of the controller, the memory is restored. In the case of the letter M, another initial condition has been inserted, which also fails to correctly reach the correct form of the letter M. However, after inserting the controller, the letter M is remembered correctly.

## 5. Discussion and future work

The results presented show that robust controllers are effective to cure memory loss, at least in simple models of biological neural networks affected by AD and represented by associative memories modeled in HNN and in Artificial HNN operating with delay and parameter variations. Evidently, in order to propose therapies for AD based in our approach, more precise neuron models should be used, such as the Hodgkin–Huxley or FitzHugh–Nagumo, before using in animal models. Nevertheless, the computational burden of a network formed by those neurons would be high, and perhaps analog hardware implementation would be useful, especially for a large number of neurons. The designed controllers could be implemented in digital or analog electronics, for example using FPAA or memristor based circuits [28], like described in Section 2.3. Regarding the interfaces between biological neurons and microelectronic devices, one can find in the literature an investigative trend in this direction [16,83,84], in which microelectrodes are developed which stimulate individual neurons in minibrains (organoids). Registration of individual neuronal signals dates to at least 1995 [58]. Microelectrode arrays (MEAs) with electrodes of dimensions of the order of tens of micrometers have been used to record and stimulate neural activity *in vitro* [37] and *in vivo* [85]. The concept of lab-on-CMOS (lab-on-a-chip) [86] was recently developed and allows fabrication of advanced VLSI (very large scale integration) circuits of the size of cells (sub 180 nm CMOS technology) that could interact with individual neurons. In a laboratory context, the patch clamp technique, using micropipette, that can access individual neurons, could also be used for first experiments [87,88].

Regarding the approach of how the model could be integrated with clinical data, future research aims to further improve this model using real data. This will allow for a deeper exploration of the model, aiming to refine the modeling of complex human organs and seek solutions that improve the quality of life and longevity of individuals. Additionally, inspired by this work, the research will continue its efforts, adapting its models and controllers to patch clamp techniques in collaboration with the team of [87,88], with a collaboration protocol already established between the involved institutions. The goal is to develop a control system capable of acting, through the injection of electrical signals, in the intracellular domain (AICD), to modify the integration of synaptic signals in the biological neural network. According to [87], increased hippocampal levels of AICD weaken the gamma oscillations underlying spatial memory. In other words, modulating AICD alters neuronal activity by affecting $Ca^{+}$ and $K^{+}$ conductance channels. The controller's role will be to stabilize the biological neural circuit in order to reduce synaptic deficiencies, attenuating the effects of AD and brain aging on memory processes.

As the IALD computational model is highly adaptable, this research seeks joint action with the developers of [63,87,88] in order to obtain a more realistic model. In the adaptations, it is intended to insert in the IALD model different time delays, new nonlinearities, new connections among neurons, and insertion of more layers and cognitive architecture

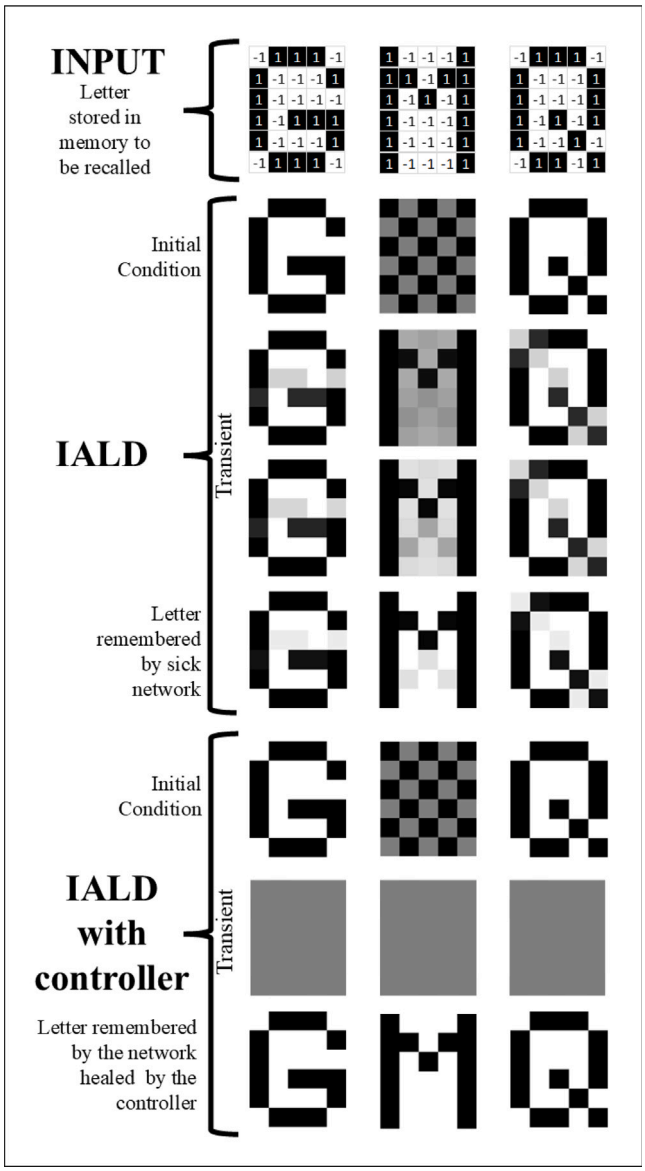


**Fig. 18.** Simulations with 30 neurons ($n = 30$) of the IALD model (13) for the letters G, M and Q of the alphabet, which cannot be built using 12 neurons.

(CA1 and CA3), similarly to what was done by [11,89]. Through this pathway, it is hoped to achieve a model with refined efficacy from real brain data. In addition, one can seek the application of the control technique developed in this work in other types of networks that simulate human memory, for example, those presented in [8,9,20].

The reader should argue how the specific part of the brain where the memory is stored could be accessed. It is well known that some activities are related to specific brain sectors. Also, in simpler organisms, like *Drosophila*, there are sufficiently detailed maps locating the positions of individual neurons [90], despite the fact that the memory networks in the brains remain unknown. Nevertheless, in the near future, the identification of neural sub-circuits related to memory of images, as used in this paper, will be a reality. Regarding the deployment of the brain-electronic interface, and the electronic system where the controller will be implemented, microsurgery equipment should be applied. In fact, our research group has equipment and expertise in micromanipulation of microelements using microrobots [56]. Those microrobots could manipulate cells with dimensions of tens of micrometers, and due to their plasticity, it would be possible for the robot to navigate is such environment.

If one is interested in implementing the controllers designed with our methods to heal memory loss in associative memory in HNN, the situation would be more favorable. Evidently, those methods would be useful only in analog hardware implemented HNN, which found many applications, as described in Section 2.3. Several factors affect the performance of the analog implementation of HNN, such as temperature and electronic noise, among others [76]. If an adversarial attack, in which the training is hindered, manages to alter the network weights such that the GAS equilibrium point become less robust and the memory starts to fail, other analog components in the integrated circuit (IC), not yet configured, could be used to implement those controllers in order to repair the memory loss. This could be done if the analog IC possess memristors, which could be programmed online by an adequate sequence of voltage pulses [78]. In fact, a linear controller $K(s)$ could be implemented using operational amplifiers, memristances, and capacitances which could be programmed online. The uncertainties in the very circuit implementation of $K(s)$, which obviously exists, could be compensated for in the design phase by transfer them to the plant $P(s)$, which is mathematically possible. Another suggestion for future research is to modify the design method presented here in order to synthesize low order controllers [91,92] and, consequently, using less analog blocks. The DK-iteration should be maintained in order to guarantee robustness by design, but the controller synthesis phase could use non-convex optimization methods that are the case for fixed-structure controllers.

The first simulations of the HNN, as well as their controllers, were preliminary done in MATLAB/Simulink, as it is an adequate platform simulation for control system validation. In future research, where analog hardware implementation of the HNN and the controllers would be realized, electronic circuit simulators like PSPICE, would be useful. Those simulators have more precise models of electronic devices producing a better prediction of the implementation's dynamics. Therefore, in the sequence of this work, as suggestions for future research, it is intended to fill this scientific gap to find advances in the treatment of AD and other neurodegenerative diseases with the development of analog microelectronic devices based on the theory presented here. An individual neuron can be implemented, with high level of details, using analog electronic circuits [93].

It should be noted that this methodology was adopted in order to simplify as much as possible the presentation of a subject already complex by nature, which involves several areas of knowledge. It is hoped that the references presented will contribute to a better understanding of all the knowledge behind the application presented in this work. For example, Theorems 1 and 2 come from complex and advanced theories in the field of robust control. An important question that can be raised about the control system in the study presented here, and taking into account real human memory, is the following: how would a feedback control system be able to know what a patient is trying to remember? In response, it can be said that this study seeks to show the effectiveness of controlling a small neuronal network, with the aim of maintaining a certain dynamic that can lead to correct neuronal functioning. This means that this work is not intended to represent control so that a person remembers a specific thought, but rather to show the ability of the control system to make the neurons in the network work as the designer wishes.

Both the ALD and IALD models are not intended to be a complete model of AD, but rather to simulate a consequence of AD, i.e., memory failures. This is the reason for inserting the letter L (of like) in the name of the model. Thus, this model is specifically designed to develop controllers aimed at correcting memory failures in artificial networks. In the future, this concept could be explored to seek alternatives for constructing controllers capable of restoring human neurons to their expected functionality, drawing from studies utilizing electrophysiological techniques.

## 6. Conclusion

This paper presents neural computational models (associative memory) that simulate memory failures analogous to human memory failures caused by AD. They were called ALD (Alzheimer Like Disease) and IALD (Improved Alzheimer Like Disease) such that the last one includes time-delays. Those models are based in Hopfield Neurons, that capture the essential feature of AD, which is memory fail. Those models can also represent analog hardware implemented HNN, which find many applications today, such as optimization, associative memory, public key generation (cryptography), among others. It was also presented that HNN are particular types of Lurie control problems, and methods for designing robust controllers for HNN in order to cure memory loss were also presented. Simulations were performed in order to validate the method.

Several suggestions for implementations either to heal memory loss in biological brains or for artificial HNN were presented, regarding brain-electronic interface, implementation using FPAA and memristors integrated circuits. Improvements in the design of the controllers by using reduced order controllers were also suggested for future research.

This is a multidisciplinary work which aims to combine several fields of knowledge, like neural networks, control theory and medicine. In these areas, an unprecedented approach was presented, establishing a relationship among Lurie control systems, robust control, time-delayed HNN and AD. The authors hope that the results presented inspire further research with the possibility of developing new techniques to alleviate the effects of AD in the future, as well as improving the performance of artificial HNN in several applications.

## CRediT authorship contribution statement

**Rafael Fernandes Pinheiro:** Writing – review & editing, Writing – original draft, Visualization, Validation, Methodology, Investigation, Formal analysis, Conceptualization. **Diego Colón:** Writing – review & editing, Supervision, Investigation. **Rui Fonseca-Pinto:** Writing – review & editing, Supervision, Investigation, Funding acquisition.

## Declaration of competing interest

The authors declare the following financial interests/personal relationships which may be considered as potential competing interests: Rafael Fernandes Pinheiro reports financial support was provided by Foundation for Science and Technology. Rafael Fernandes Pinheiro reports a relationship with Polytechnic Institute of Leiria that includes:. If there are other authors, they declare that they have no known competing financial interests or personal relationships that could have appeared to influence the work reported in this paper.

## Acknowledgments

This work was funded by Portuguese national funds provided by the Portuguese Foundation for Science and Technology (FCT) (FCT-UIDB/05704/2020) and in the scope of the research project 2 ARTs (PTDC/EMD-EMD/6588/2020). R. F. Pinheiro acknowledge FCT for the financial support through the Institutional Scientific Employment Stimulus CEECINST/00060/2021.

## Data availability

No data was used for the research described in the article.

## References

[1] A. Alzheimer, Uber eine eigenartige erkrankung der hirnrinde (in german), Allg. Z. Psychiatr. Und Phychish- Gerichtl. Med. 64 (1907) 146–148.
[2] R. Mehra, K.P. Kepp, Understanding familial Alzheimer's disease: The fit-stay-trim mechanism of y-secretase, Wiley Interdiscip. Rev. Comput. Mol. Sci. 12 (1) (2022) 1–16.
[3] J. Palop, L. Mucke, Amyloid-$\beta$–induced neuronal dysfunction in Alzheimer's disease: from synapses toward neural networks, Nature Neurosci. 13 (2010) 812–818.
[4] S. Moravveji, N. Doyon, J. Mashreghi, S. Duchesne, A scoping review of mathematical models covering Alzheimer's disease progression, Front. Neuroinformatics 18 (2024) 1281656.
[5] D.L. Craft, L.M. Wein, D.J. Selkoe, A mathematical model of the impact of novel treatments on the a$\beta$burden in the Alzheimer's brain, CSF and plasma, Bull. Math. Biol. 64 (5) (2002) 1011–1031.
[6] W. Hao, A. Friedman, Mathematical model on Alzheimer's disease, BMC Syst Biol 10 (2016) 108.
[7] J.J. Hopfield, Neurons with graded response have collective computational properties like those of two-state neurons, Proc. Natl. Acad. Sci. the USA 81 (10) (1984) 3088–3092.
[8] B. Kosto, Bidirectional associative memories, IEEE Trans. Syst. Man Cybern. 18 (1) (1988) 49–60.
[9] M. Hagiwara, Multidirectional associative memory, in: Proc. IEEE INNS Int. Joint Conf. Neural Netw., 1990, pp. 1506–1511.
[10] B. Cartling, Control of the complexity of associative memory dynamics by neuronal adaptation, Int. J. Neural Syst. 4 (02) (1993) 129–141.
[11] W. Zhao, Q. Qiao, D. Wang, A hippocampus CA3 model with autoassociative and heteroassociative memory functions, in: 2009 2nd International Conference on Biomedical Engineering and Informatics, Tianjin, China, 2009, pp. 1–4.
[12] W.X. Zhao, Q.L. Qiao, D. Wang, Hippocampus function modeling with neural network, in: 2009 IEEE International Symposium on IT in Medicine and Education, 1, 2009, pp. 1128–1131.
[13] A.T. Sergio, D.S. Braga, L.N.F. Buarque, Computational modeling of Alzheimer's disease symptoms using venn's network, in: Anais do IX Congresso Brasileiro de Redes Neurais, 2009, p. 8, ABRICOM/SBIC, Ouro Preto.
[14] R.A. Menezes, L.H. Monteiro, Synaptic compensation on hopfield network: implications for memory rehabilitation, Neural Comput. Appl. 20 (2011) 753–757.
[15] R.A. Thuraisingham, Dementia and hopfield model, J. Neural Transm. 122 (2015) 773–777.
[16] M. Morrison, P.D. Maia, J.N. Kutz, Preventing neurodegenerative memory loss in hopfield neuronal networks using cerebral organoids or external microelectronics, in: Computational and Mathematical Methods in Medicine, 2017, p. 13, 6102494.
[17] R.F. Pinheiro, D. Colón, L.L.R. Reinoso, Relating lurie's problem, hopfield's network and Alzheimer's disease, Braz. Congr. Autom. 2 (1) (2020).
[18] R.F. Pinheiro, The Lurie problem and its relationships with artificial neural networks and Alzheimer-like disease, (Ph.D. thesis), University of São Paulo, 2021.
[19] L.-L. Huang, Y. Zhang, J.-H. Xiang, J. Liu, Extreme multistability in a hopfield neural network based on two biological neuronal systems, IEEE Trans. Circuits Syst. II Express Briefs 69 (11) (2022) 4568–4572.
[20] S. Du, Z. Zhang, J. Li, C. Sun, J. Sun, Q. Hong, Multidirectional associative memory neural network circuit based on memristor, in: IEEE Transactions on Biomedical Circuits and Systems, 2023.
[21] G. Ma, R. Jiang, L. Wang, H. Tang, Dual memory model for experience-once task-incremental lifelong learning, Neural Netw. 166 (2023) 174–187.
[22] Z. Chen, X. Wang, C. Yang, Z. Wang, Z. Zeng, Memristive circuit design for personalized emotion generation with memory and retrieval functions, in: IEEE Transactions on Cognitive and Developmental Systems, 2023.
[23] J. Liu, F. Xiong, Y. Zhou, S. Duan, X. Hu, Bioinspired memristive neural network circuit design of cross-modal associative memory, in: IEEE Transactions on Cognitive and Developmental Systems, 2023.
[24] G. Joya, M.A. Atencia, F. Sandoval, Hopfield neural networks for optimization: study of the different dynamics, Neurocomputing 43 (1–4) (2002) 219–237.
[25] A.P. Braga, A.C.P.L. Carvalho, T.B. Ludemir, Artificial Neural Networks: Theory and Applications (in Portuguese), LTC, RJ, 2005.
[26] X. Lv, A new approach to stability analysis for stochastic hopfield neural networks with time delays, IEEE Trans. Autom. Control 67 (10) (2022) 5278–5288.
[27] F. Yu, H. Shen, Q. Yu, X. Kong, P.K. Sharma, S. Cai, Privacy protection of medical data based on multi-scroll memristive hopfield neural network, IEEE Trans. Netw. Sci. Eng. 10 (2) (2023) 845–858.
[28] W. Yao, J. Liu, Y. Sun, et al., Dynamics analysis and image encryption application of hopfield neural network with a novel multistable and highly tunable memristor, Nonlinear Dynam. 112 (2024) 693–708.
[29] W. Yao, J. Fang, Yu, F. Xiong, L. Tang, J. Zhang, Y. Sun, Electromagnetic radiation control for nonlinear dynamics of hopfield neural networks, Chaos An Interdiscip. J. Nonlinear Sci. 34 (7) (2024).

[30] R. Sharma, T. Goel, M. Tanveer, C.T. Lin, R. Murugan, Deep-learning-based diagnosis and prognosis of Alzheimer's disease: A comprehensive review, IEEE Trans. Cogn. Dev. Syst. 15 (3) (2023) 1123–1138.

[31] E.Q. Wu, X.-Y. Peng, S.-D. Chen, X.-Y. Zhao, Z.-R. Tang, Detecting Alzheimer's dementia degree, IEEE Trans. Cogn. Dev. Syst. 14 (1) (2022) 116–125.

[32] H. Li, H. Zhao, Mathematical model of Alzheimer's disease with prion proteins interactions and treatment, Appl. Math. Comput 433 (2022) 127377.

[33] J. Feng, Computational Neuroscience: A Comprehensive Approach, Chapman & Hall/CRC Computational Biology Series, 2003.

[34] R.F. Pinheiro, Colón. D., An application of the lurie problem in hopfield neural networks, in: Proceedings of DINAME 2017, 2019, pp. 371–382.

[35] L.M. Sanchez-Rodriguez, Y. Iturria-Medina, E.A. Baines, S.C. Mallo, M. Dousty, R.C. Sotero, Design of optimal nonlinear network controllers for Alzheimer's disease, PLoS Comput. Biol. 14 (5) (2018) 1–24.

[36] H. Lin, X. Deng, F. Yu, Y. Sun, Grid multibutterfly memristive neural network with three memristive systems: Modeling, Dyn. Anal. Appl. Police IoT, IEEE Internet Things J. 11 (18) (2024) 29878–29889.

[37] J.R. Buitenweg, W.L.C. Rutten, E. Marani, Geometry-based finite-element modeling of the electrical contact between a cultured neuron and a microelectrode, IEEE Trans. Biomed. Eng. 50 (4) (2003) 501–509.

[38] H. Lin, X. Deng, F. Yu, Y. Sun, Diversified butterfly attractors of memristive HNN with two memristive systems and application in IoMT for privacy protection, in: IEEE Transactions on Computer-Aided Design of Integrated Circuits and Systems, 2024, early access.

[39] A.I. Lurie, V.N. Postnikov, On the theory of stability of control systems (in Russian), Prikl. Mat. I Mekh. 8 (3) (1944) 246–248.

[40] J. Doyle, Analysis of feedback systems with structured uncertainty, IEE Proc. D - Control. Theory Appl. 129 (6) (1982) 242–250.

[41] S. Skogestad, I. Postlethwaite, Multivariable Feedback Control: Analysis and Design, second ed., John Wiley and Sons, New York, 2007.

[42] K. Zhou, J.C. Doyle, K. Glover, Optimal Control Prentice Hall, New Jersey, 1995.

[43] A. Imani M. Montazeri-Gh, A multi-loop switching controller for aircraft gas turbine engine with stability proof, Int. J. Control. Autom. Syst. 17 (2019) 1359–1368.

[44] X. Liao, P. Yu, Absolute Stability of Nonlinear Control Systems, second ed., Springer, Netherlands, 2008.

[45] Y. Ni, Z. Wang, Y. Fan, X. Huang, H. Shen, Memory-based event-triggered control for global synchronization of chaotic lur'e systems and its application, IEEE Trans. Syst. Man, Cybernetics: Syst. 53 (3) (2022) 1920–1931.

[46] X. Yu, F. Liao, Preview tracking control for discrete-time nonlinear lur'e systems with sector-bounded nonlinearities, Trans. Inst. Meas. Control 41 (10) (2019) 2726–2737.

[47] R.F. Pinheiro, D. Colón, An application of the lurie problem in hopfield neural networks, in: Lecture Notes in Mechanical Engineering, Springer, Cham, 2019, pp. 371–382.

[48] Q. Xiao, Z. Zeng, Lagrange stability for T-S fuzzy memristive neural networks with time-varying delays on time scales, IEEE Trans. Fuzzy Syst. 26 (3) (2018) 1091–1103.

[49] S.F. Abtahi, A. Yazdi, Robust control synthesis using coefficient diagram method and $\mu$-analysis: an aerospace example, Int. J. Dynam. Control. 7 (2019) 595–606.

[50] R.F. Pinheiro, R. Fonseca-Pinto, D. Colón, A review of the lurie problem and its applications in the medical and biological fields, AIMS Math. 9 (11) (2024) 32962–32999.

[51] R.F. Pinheiro, D. Colón, On the $mu$-analysis and synthesis of MIMO lurie-type systems with application in complex networks, Circuits Systems Signal Process. 40 (1) (2021) 193–232.

[52] R.F. Pinheiro, D. Colón, Analysis and synthesis of single-input-single-output lurie type systems via $H_\infty$ mixed-sensitivity, Trans. Inst. Meas. Control 44 (1) (2022) 133–143.

[53] R.F. Pinheiro, D. Colón, On the $\mu$-analysis and synthesis for uncertain time-delay systems with padé approximations, J. Franklin Inst. 361 (4) (2024).

[54] C. Zhou, X. Zeng, X. Yu, et al., A unified associative memory model based on external inputs of continuous recurrent neural networks, Neurocomputing 186 (2016) 44–53.

[55] F.J. Hamill, et al., Improved patch-clamp techniques for high-resolution current recording from cells and cell-free membrane patches, Pflügers Arch. 391 (1981) 85–100.

[56] A.A. Felix, D. Colón, B.M. Verona, L.W.S.L. Ramos, H. Cobas-Gomez, M.R. Gongora-Rubio, Identification and robust controllers for an electrostatic microgripper, J. Vib. Eng. Technol. 9 (3) (2021) 389–397.

[57] M.T. Barros, S. Dey, Feed-forward and feedback control in astrocytes for $Ca^{2+}$2+-based molecular communications nanonetworks, IEEE/ ACM Trans. Comput. Biology Bioinform. 17 (4) (2020) 1174–1186.

[58] M.A.L. Nicolelis, et al., Sensorimotor encoding by synchronous neural ensemble activity at multiple levels of the somatosensory system, Science 268 (1995) 1353–1358.

[59] R.D. Terry, Cell death or synaptic loss in alzheimer disease, J. Neuropathol. Exp. Neurol. 59 (12) (2000) 1118–1119.

[60] G. Mckhann, D. Drachman, M. Folstein, et al., Clinical diagnosis of Alzheimer's disease: report of the NINCDS-ADRDA work group under the auspices of department of health and human services task force on Alzheimer's disease, Neurology 34 (7) (1984) 939–944.

[61] E.V. Freitas, Treatise on Geriatrics and Gerontology (in Portuguese), second ed., Guanabara Koogan, Rio de Janeiro, 2006.

[62] D.F. Selkoe, Alzheimer's disease: Genes, proteins, and therapy, Physiol. Rev. 81 (2) (2001) 741–766.

[63] H.C. Brigas, et al., IL-17 triggers the onset of cognitive and synaptic deficits in early stages of Alzheimer's disease, Cell Rep. 36 (9) (2021).

[64] L.R. Squire, Mechanisms of memory, Science 232 (4758) (1986) 1612–1619.

[65] M. Mishkin, T. Appenzeller, The anatomy of memory, Sci. Am. 256 (6) (1987) 80–89.

[66] Z.R. Chen, J.B. Huang, S.L. Yang, F.F. Hong, Role of cholinergic signaling in Alzheimer's disease, Molecules 27 (1816) (2022).

[67] H. Fillit, J. Cummings, Practice guidelines for the diagnosis and treatment of Alzheimer's disease in a managed care setting: Part II–pharmacologic therapy, Manag. Care Interface (2000) 51–56.

[68] A.M. Hake, The treatment of Alzheimer's disease: The approach from a clinical specialist in the trenches, Semin. Neurol. 22 (1) (2002) 071–074.

[69] P.K. Mandal, G. G. Liberati, J.L.D. da Rocha, et al., Toward a brain-computer interface for Alzheimer's disease patients by combining classical conditioning and brain state classification, J. Alzheimer' s Dis. 31 (s3) (2012) 211–220.

[70] H. Tayebi, S. Azadnajafabad, S.F. Maroufi, et al., Applications of brain-computer interfaces in neurodegenerative diseases, Neurosurg Rev 46 (131) (2023).

[71] M. Guidetti, S. Marceglia, A. Loh, et al., Clinical perspectives of adaptive deep brain stimulation, Brain Stimul. 14 (5) (2021) 1238–1247.

[72] J.J. Hopfield, Neural networks and physical systems with emergent collective computational abilities, Proc. Natl. Acad. Sci. 79 (8) (1982) 2554–2558.

[73] Z. Yu, A.M. Abdulghani, A. Zahid, H. Heidari, M.A. Imran, Q.H. Abbasi, An overview of neuromorphic computing for artificial intelligence enabled hardware-based hopfield neural network, IEEE Access 8 (2020) 67085–67099.

[74] E. Kaszkurewicz, A. Bhaya, On a class of globally stable neural circuits, IEEE Trans. Circuits Syst. I 41 (2) (1994) 171–174.

[75] C. Mead, Neuromorphic electronic systems, Proc. IEEE 78 (10) (1990) 1629–1636.

[76] P.O. Mathews, J.O. Hasler, Hopfield vs ising: A comparison on the SoC FPAA, IEEE Trans. Circuits Syst. I. Regul. Pap. 71 (9) (2024) 3999–4008.

[77] C. Chen, F. Min, Y. Zhang, H. Bao, Relu-type hopfield neural network with analog hardware implementation, Chaos Solitons Fractals 167 (2023).

[78] S.H. Jo, T. Chang, I. Ebong, B.B. Bhadviya, P. Mazunder, E. Lu, Nanoscale memristor device as synapse in neuromorphic systems, Nano Lett. 10 (4) (2010) 1297–1301.

[79] S.H. Zak, Systems and Control, Oxford University Press, New York, 2003.

[80] J. Cao, K. Yuan, H. Li, Global asymptotical stability of recurrent neural networks with multiple discrete delays and distributed delays, IEEE Trans. Neural Netw. 17 (6) (2006) 1646–1651.

[81] E. Fridman, Introduction To Time-Delay Systems: Analysis and Control, Systems & Control: Foundations & Applications, Springer International Publishing, 2014.

[82] J. Doyle, Structured uncertainty in control system design, in: 24th IEEE CDC, 1985, pp. 260–265.

[83] Y. Cho, et al., Emerging materials and technologies with applications in flexible neural implants: A comprehensive review of current issues with neural devices, Adv. Mater. 33 (47) (2021) 2005786.

[84] L. Iannucci, G.L. Barbruni, D. Ghezzi, M. Parvis, S. Grassini, S. Carrara, Changes over time in the electrode/brain interface impedance: An ex-vivo study, IEEE Trans. Biomed. Circuits Syst. 17 (3) (2023) 495–506.

[85] J. Wessberg, C. Stambaugh, J. Kralik, et al., Real-time prediction of hand trajectory by ensembles of cortical neurons in primates, Nature 408 (2000) 361–365.

[86] X. Wang, et al., A 1024-Channel Simultaneous Electrophysiological and Electrochemical Neural Recording System with In-Pixel Digitization and Crosstalk Compensation.

[87] P.A. Pousinha and, et al., The amyloid precursor protein C-terminal domain alters CA1 neuron firing, modifying hippocampus oscillations and impairing spatial memory encoding, Cell Rep. 29 (2) (2019) 317–331.

[88] P.A. Pousinha and, et al., Physiological and pathophysiological control of synaptic GluN2B-NMDA receptors by the C-terminal domain of amyloid precursor protein, Elife 6 (2017).

[89] T.C. Rodríguez-Flores, G.A. Palomo-Briones, F. Robles, F. Ramos, Proposal for a computational model of incentive memory, Cogn. Syst. Res. 77 (2023) 153–173.

[90] S. Dorkenwald, A. Matsliah, A.R. Sterling, et al., Neuronal wiring diagram of an adult brain, Nature 634 (2024) 124–138.

[91] P. Apkarian, D. Noll, Nonsmooth $H_\infty$ synthesis, IEEE Trans. Autom. Control 51 (1) (2006) 71–86.

[92] F.H. Clarke, Optimization and nonsmooth analysis, Soc. Ind. Appl. Math. (1990).

[93] K. Abu-Hassan, J.D. Taylor, P.G. Morris, et al., Optimal solid state neurons, Nat. Commun. 10 (2019) 5309.

**Rafael Fernandes Pinheiro** received the B.S. degree in Applied and Computational Mathematics (2010) and M.S. degree in Applied Mathematics (2015) from the Institute of Mathematics and Statistics, University of São Paulo, Brazil. In 2021, he received the Ph.D. degree in Systems Engineering from the Polytechnic School of the University of São Paulo. He is currently a post-doctoral researcher with the ciTechCare, Polytechnic of Leiria, Portugal. His research interests are: analysis of biosignals, development of algorithms of artificial intelligence for the medical field, mathematical modeling and control of biological systems.

**Diego Colón** received the B.S. degree in Electrical Engineering (1997), M.S. in Systems Engineering (1999) and Ph.D. in Systems Engineering (2003) from the Polytechnic School of the University of São Paulo, Brazil. He is currently consultant with the National Council for Scientific and Technological Development, consultant with the Foundation for Research Support of the State of São Paulo (FAPESP) and associate professor with the Polytechnic School of the University of São Paulo. He has experience in Electrical Engineering, acting on the following subjects: control systems, industrial automation, adaptive control, discrete control and nonlinear control.

**Rui Fonseca-Pinto** (MD, Ph.D.) Medical Doctor, received the B.S. (2001) and M.S. (2004) degree in Mathematics from the University of Évora, Portugal. Received the M.S. degree in Medical Physics (2005), and Ph.D. in Biomedical Engineering and Biophysics (2010) from the University of Lisbon, Portugal, where also received the B.S. (2014) and M.S. (2017) degree in medicine. He is currently director and professor with the School of Health Sciences, and researcher with the ciTechCare, Polytechnic of Leiria, Portugal. His research interests are focused on the application of decision support techniques in Medicine (using Machine Learning/Artificial Intelligence methodologies applied to biomedical data).