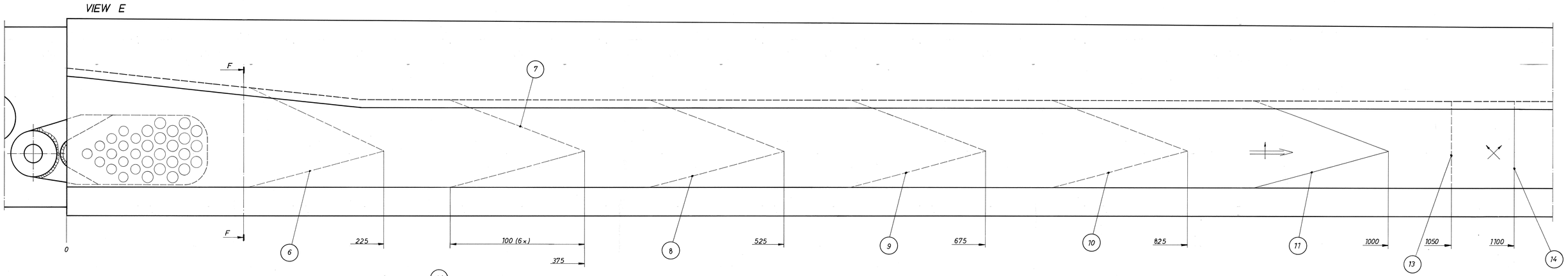

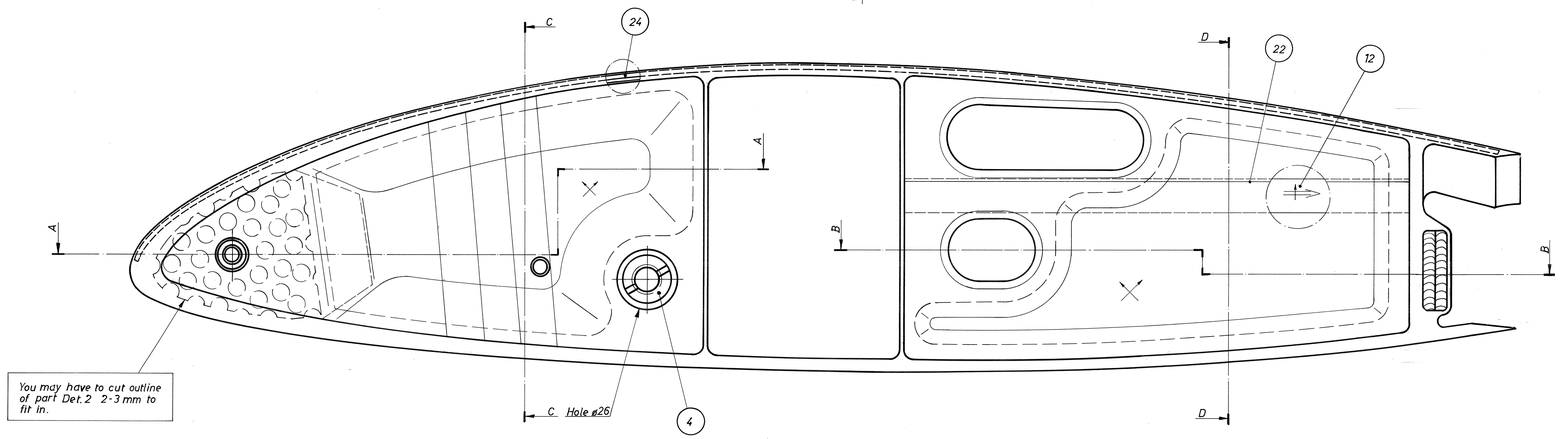

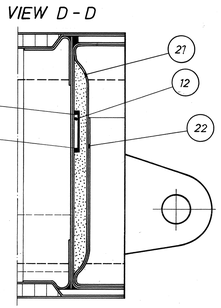

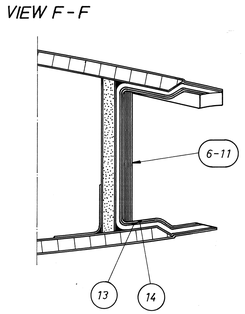

Drawing not to scale

Starboard wing only drawn, port side wing reversed.

Example of port side root rib. (rear part)

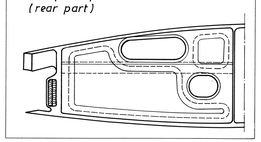

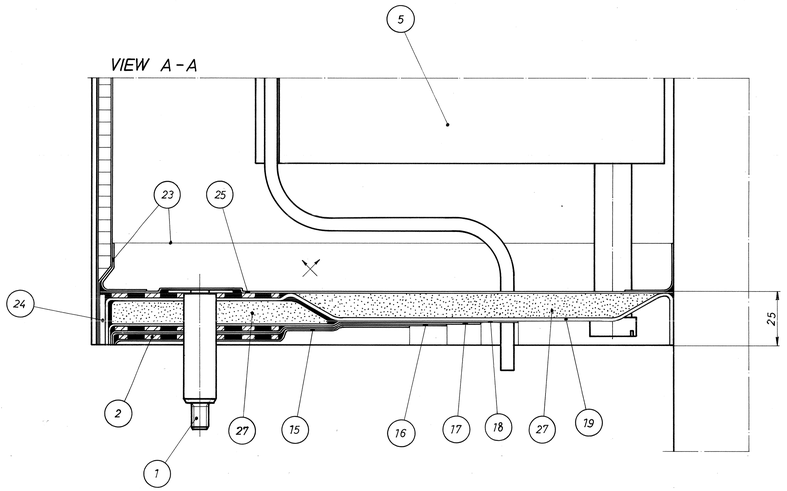

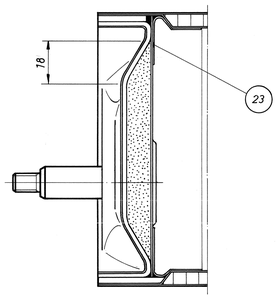

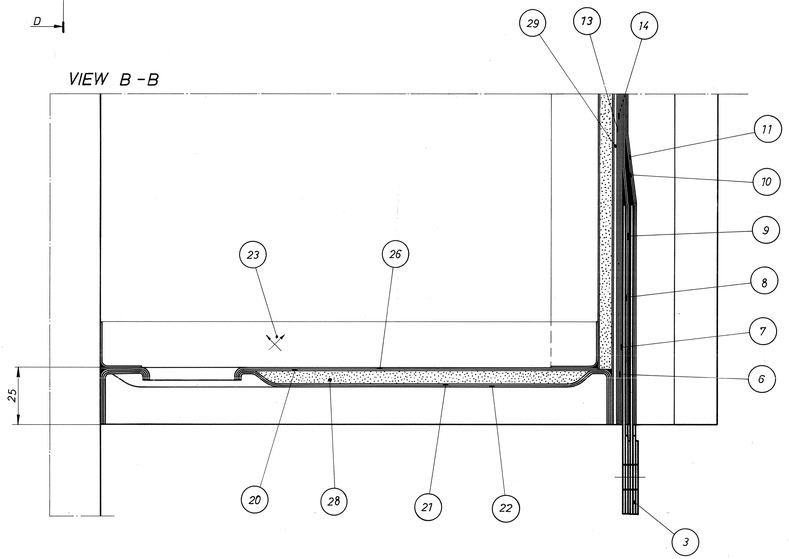

Det.-nr Pos. no	Ant. Qty.	Benämning Denomination	Material	Mod. no. Ämne /Matt. Dimension	Anmärkning Remarks
30					
29		12 W 1101-57			
28		Divinycell 60		5 mm	
27		"		10 mm	
26	1	12 W LAM 038-R/L			
25	1	12 W LAM 039-R/L			
24	1	12 W LAM 040			
23		Attachment laminate	2x92 125		
22	1	Reinforcement laminate	"		
21	1	" "	"		
20	1	" "	"		
19	1	" "	4x92 125		
18	1	" "	2x92 125		
17	1	" "	"		
16	1	" "	"		
15	1	" "	"		
14	1	" "	1x92 125		
13	1	" "	"		
12	1	" "	4x92 146		
11	1	" "	1x92 146		
10	1	" "	"		
9	1	" "	"		
8	1	" "	"		
7	1	" "	"		
6	1	" "	"		
5					
4	1	Page 4			
3	1	Page 2			
2	3	Same as 12 FUS 1412-35			
1	1	Page 3			

Konstr. /Constr. | Ritad /Drawn: BAT | Kontr. /Contr. | Godk. /Approved | Skala /Scale | Ersätter /Replaces | Ersatt av /Replaced by | Dat. /Date: 971118

WINDEX 1200
RADAB AB
STOCKHOLM, SWEDEN

ROOT RIB/
WING ATTACHMENT

Ritn. -nr /Drawing No: 12 W 1103
1 of 4

Sv Pat 462744 Rettinskumpanier TERRAB AB, YSTAD