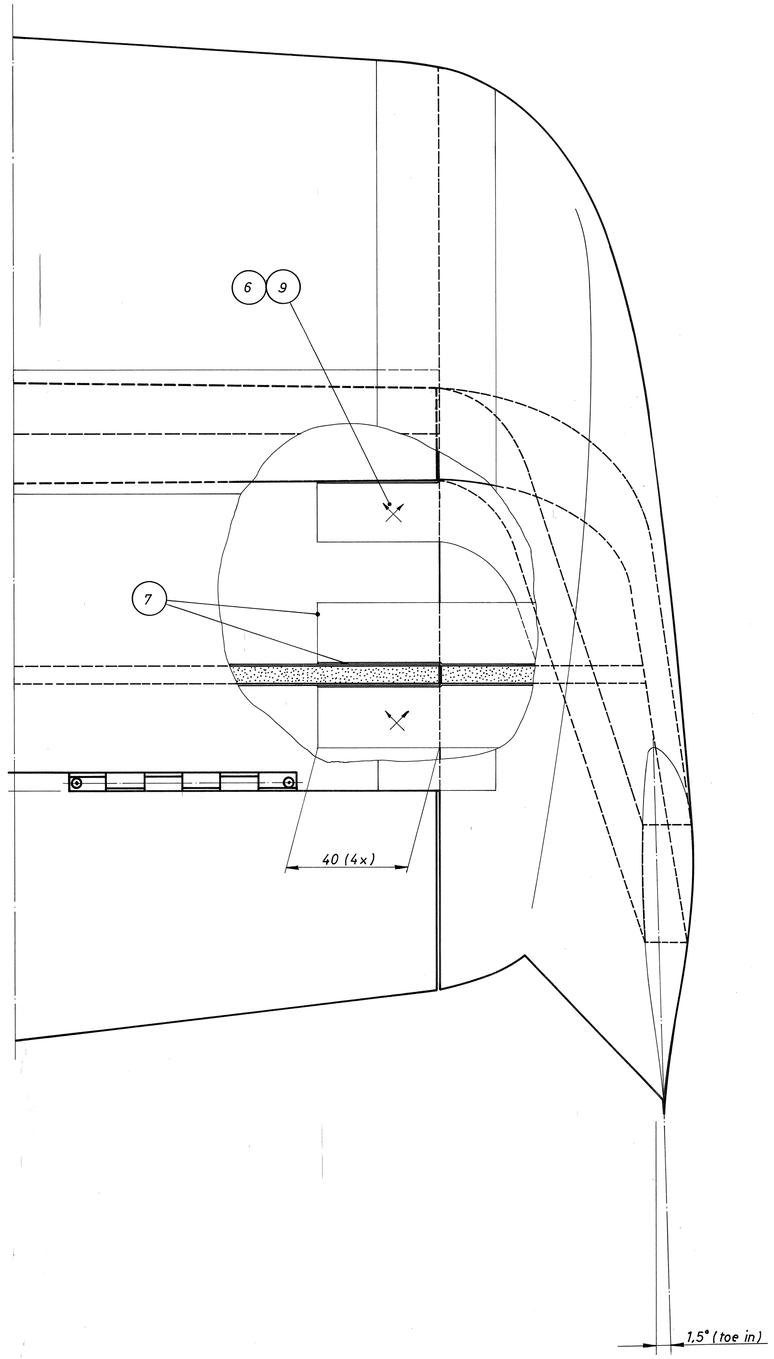

VIEW C-C

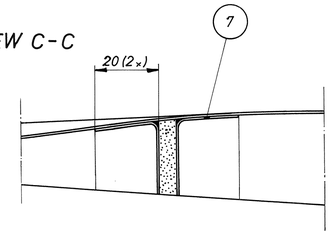

VIEW B-B

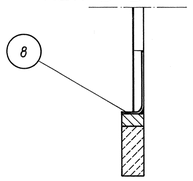

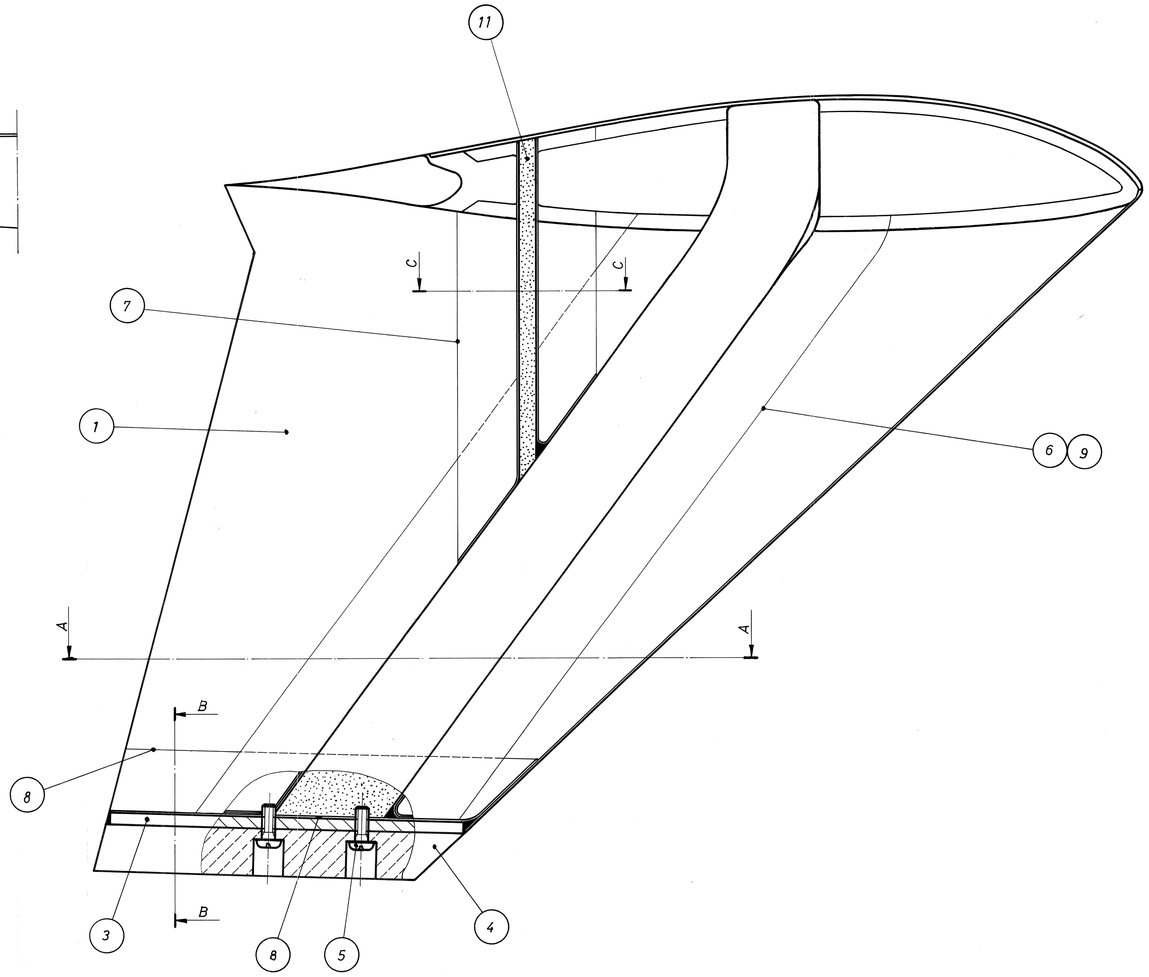

All 92 125 glass tapes must be cut with the fiber orientarion 45° to the longitudinal.

Starboard winglet only drawn, port side winglet reversed.

Drawing not to scale

VIEW A-A

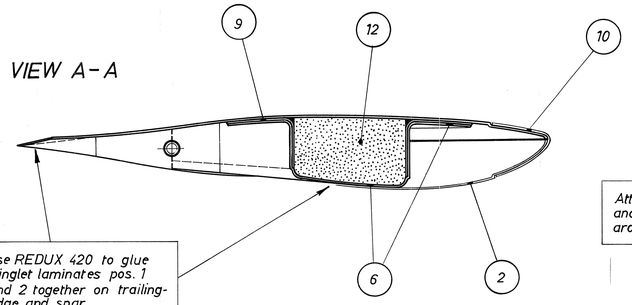

Use REDUX 420 to glue winglet laminates pos. 1 and 2 together on trailing-edge and spar.

Attach winglet laminates pos. 1 and 2 with laminate pos. 10 around leading edge.

Det.-nr Pos. no	Ant. Qty.	Benämning Denomination	Material	Mod. no. Ämne /Matr. Dimension	Anmärkning Remarks
12	1	White foam 30			
11	1	Divinycell 60			
10	1	Attachment laminate	2x92 125		
9	2	" "	1x92 125		
8	1	" "	"		
7	2	" "	"		
6	2	" "	"		
5	4	Machine screw MS 27039-1-06			
4	2	Delrin skid			
3	2	Page 2			
2	1	12 W LAM 020-U			
1	1	12 W LAM 020-L			

Konstr. /Constr.	Ritad /Drawn	Kontr. /Contr.	Godk. /Approved	Skala /Scale	Ersätter /Replaces	Ersatt av /Replaced by
	BAY					Dat. /Date 97 12 09

WINDEX 1200
RADAB AB
STOCKHOLM, SWEDEN

WINGLET

Ritn. -nr /Drawing No
12 W 1105
1 of 2

Copyright 465744 Rättsinskompanniet TERRAB AB, YSTAD

ARKITEX RITFILM