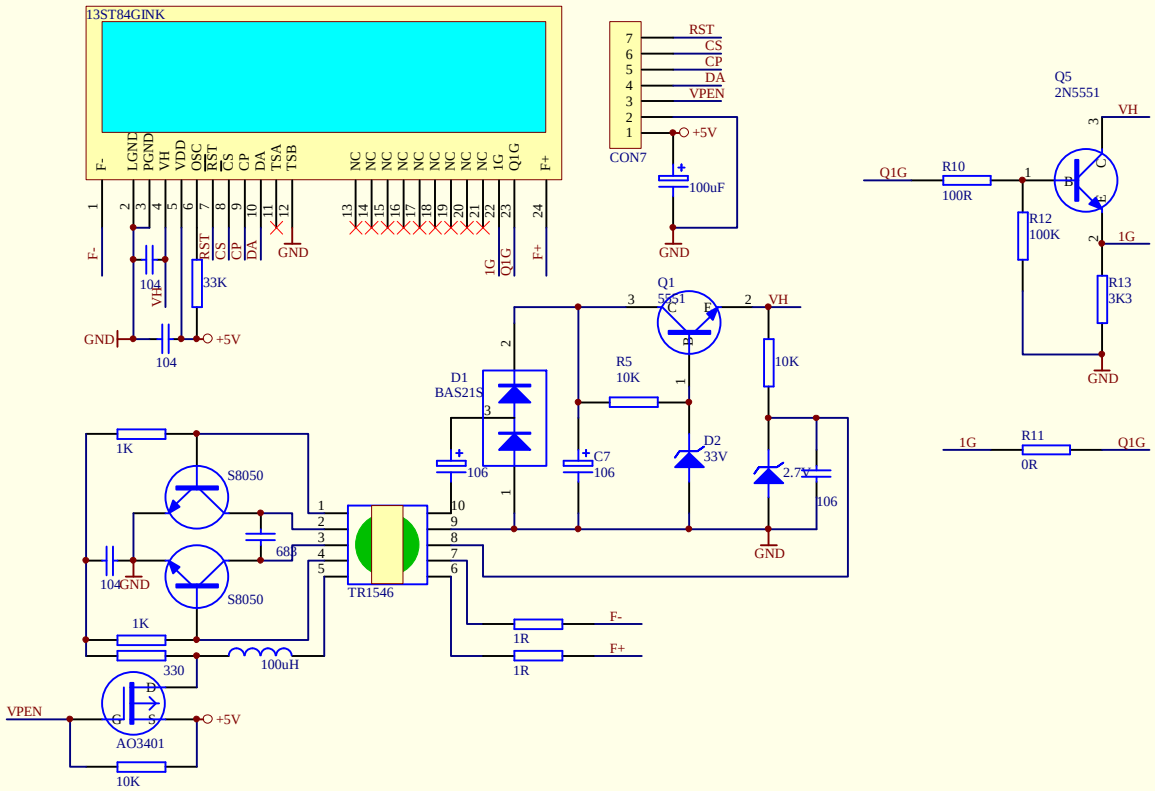

Title		
Size A4	Number	Revision
Date: 10-Jan-2019	Sheet of	
File: E:\DF_ELC_STUDIO\DF_ELC_STUDIO\DRAWING.Ddb		