Internet-based Japanese Language Learning System for Handwriting Kanji Characters Beautifully

Kazuaki Ando, Toshinori Yamasaki
Faculty of Engineering, Kagawa University
2217-20 Hayashi, Takamatsu 761-0396, JAPAN
{ando, yamasaki}@eng.kagawa-u.ac.jp

Naoko Yamashita
Faculty of Education, Kagawa University
1-1 Saiwai, Takamatsu 760-8522 JAPAN
nyamash@ed.kagawa-u.ac.jp

Abstract

Japanese character consists of several kinds of characters such as Hiragana, Katakana, and Kanji. It is difficult to read and write Japanese characters for foreigners from the alphabetical culture area because the structure of them is more complicated than that of alphabetic character. This paper describes a training system for handwriting Japanese characters beautifully in the Internet environment. The learner can acquire the stroke order that is the fundamental handwriting skills of Japanese character. Everybody practices how to write beautiful Kanji repeatedly according to the suitable guidance from a Web server, and always uses this system from anywhere, since our system uses the information communication technology.

1. Introduction

The several interesting education systems which use Internet technology are proposed with the spread of the network society. In the geography learning through web reference, we can compare the world wide geography and meteorology with the local one where we live in, and can learn the characteristic of the weather. The real time observation science learning is interesting in the advanced science subject, where the remote control of the expensive equipment and the star observation by telephoto lens located the remote place. The new style social subject learning is reported using the electronic distinct contents including the historical and cultural resources. As the learning by internet tools enables us to learn always, anyone, anywhere, the learning person can grapple more actively with the problem which it should solve. In the learning by the internet tools, we can interchange easily with the students who have the similar learning subjects. Also, in the internet learning, we can do empirical learning compared with the old style learning which was limited only to the classroom because of spreading the unknown experienced field. Consequently, these new learning systems promote learning opportunity and the life long learning oriented society.

The foreigners who stay in Japan and who want to learn Japanese have been steadily increasing according to remarkable internationalization of Japan. However, the aliens using alphabet languages, such as English, French and so on, are difficult to master how to write Japanese characters correctly, since the structure of them is more complicated than that of alphabetic letter. For example, in order to write beautiful Japanese characters correctly by hand, it is important to write characters according to the suitable writing stroke order. The stroke order is one of the fundamental skills to write a beautiful and suitable character. The correct stroke order is useful for memorizing kanji. However, there is no default rule for the stroke order. The stroke order originated from the empirical writing skill which is devised by a forefather for handwriting beautifully. Therefore, it is hard to master the stroke order for the alien who learns Japanese for the first time. Moreover, the kanji shows the meaning in one character, we raise and create the handwriting to the brush handwriting calligraphy art. Also from this point, we can say that it is important to write kanji beautifully. To acquire the reading and writing of such Japanese characters, it is effective to practice through handwriting Japanese character actually.

From the above described, we are developing internet-based Japanese learning system on using an on-line character recognition technique[3]. We can learn how to write Japanese Kanji characters correctly through handwriting. The learner inputs the practice character by hand. After sending the input data to the Web server, the system compares an input character with a model character in a reference database. Finally, the system gives the learner the suitable guidance how to write characters correctly via Internet. The system has another function. The learner can ask the system about how to write Japanese character suitably, the meaning of Japanese characters, and so on. It is called Question-Answering(QA) module. The learner can practice

Proceedings of the International Conference on Computers in Education (ICCE'02)
0-7695-1509-6/02 $17.00 © 2002 IEEE

IEEE COMPUTER SOCIETY

Authorized licensed use limited to: Universite de Geneve. Downloaded on October 09,2025 at 08:12:05 UTC from IEEE Xplore. Restrictions apply.

the way of beautiful handwriting Japanese Kanji characters repeatedly according to the instruction by the system, and get useful information about Japanese characters from anywhere.

2. Internet-based Language Learning System

2.1. The outline of the system

We use the character recognition technique for the language learning system. The purpose, however, is different. The purpose of the character recognition system is to recognize unknown input character. On the other hand, the language learning system knows a kind of the input character beforehand. The language learning system estimates the way of writing Japanese Kanji characters and gives how to write the Kanji characters beautifully.

The figure 1 shows the outline of online character recognition system and our system. In the character recognition, the system does pre-processing such as the noise removal, the normalization of the size and position to the inputted unknown character. Next, the system classifies the input character by feature extractions such as the stroke shape, the cross and contact point of the stroke through comparing the input character with the reference character in the dictionary. On the other hand, the language learning system also does pre-processing and a feature extraction for the inputted known character same as the character recognition system. After that, the system compares an input character and the model character in the reference database. Finally, the system estimates an improper handwriting way and gives the learner the suitable guidance how to write Japanese characters correctly.

Figure 2 shows the outline of our system. The learner inputs a practice character using the tablet or mouse from the Web client. The data of the input character is sent to the Web server through the input/output interface after preprocessing. The system generates the guidance for writing beautiful Kanji character after evaluating a stroke order by comparing the input character and the model one in the reference database. The learner can learn how to write characters correctly according to the guidance from the server. The learner can also ask the system about how to write Japanese character, the meaning of Japanese characters, and so on. It is called Question-Answering(QA) module. The module analyzes the query written by natural language from the user and generates appropriate answers based on the template and query analysis. This paper reports the stroke evaluation module only, because the QA module is not yet completed.

We develop the stroke evaluation part by dividing into 4 modules from the input of the practice character to the stroke order evaluation and the guidance shown in figure 3. The procedure of the processing outline is described below:

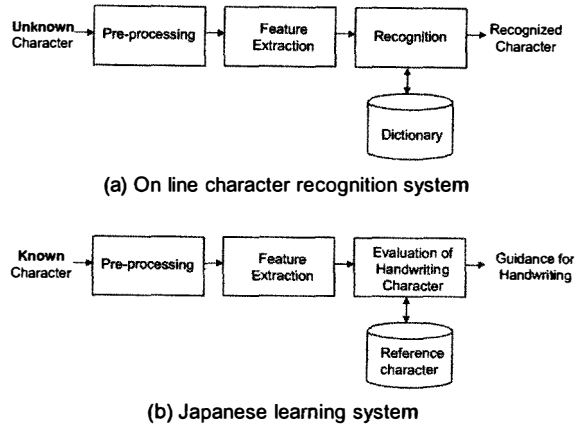

Figure 1. Online character recognition system and our system

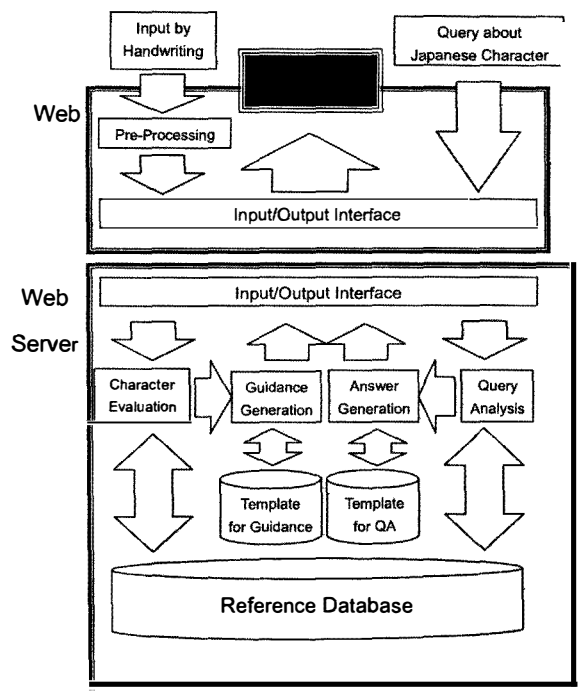

Figure 2. The outline of internet-based language learning system

Proceedings of the International Conference on Computers in Education (ICCE'02)
0-7695-1509-6/02 $17.00 © 2002 IEEE

Authorized licensed use limited to: Universite de Geneve. Downloaded on October 09,2025 at 08:12:05 UTC from IEEE Xplore. Restrictions apply.

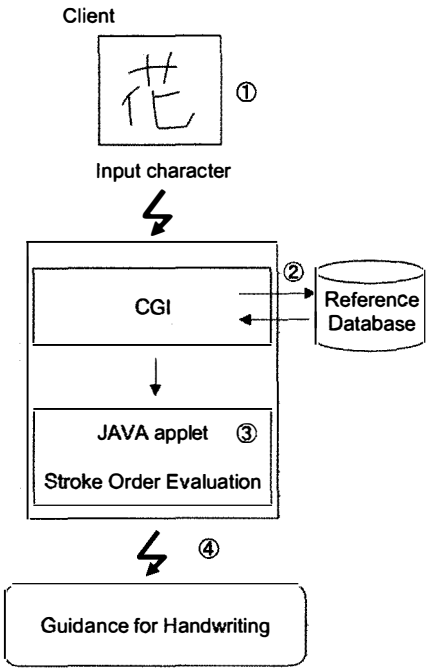

Figure 3. The outline of evaluation process

1) The learner inputs a practice Kanji character using the mouse and sends it to the Web server.

2) In the server, the system prepares a model character from the reference database by the CGI program.

3) The system evaluates the stroke order of the input character according to matching the input character and the model one with Java applet.

4) The system gives writing guidance to the client based on the evaluation result for the stroke order.

2.2. On-line input of the practice character and the pre-processing

The learner inputs the handwriting character in the frame by the mouse. The input practice character is a time serious data which consist of the position coordinates ranging written sequence of the character, the system can evaluate the dynamic features such as the stroke order and the writing pen speed, too. Figure 5 shows the Input frame. The size of frame is 30 × 30[mm]. In the input process, the system displays a sequence of stroke coordinate dynamically. The system normalizes the input character and the reference one to adjust the size and the stroke shape distortion. The system normalizes the characters to 256 × 256[Dot]. After that, the overlap of the pen point coordinate is excluded(4).

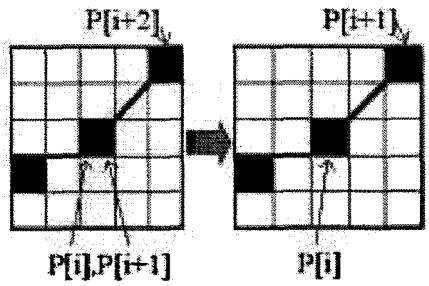

Figure 4. Excluding the overlap of the pen point coordinate

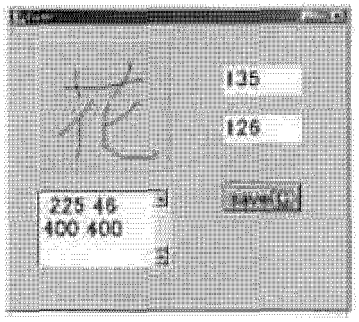

Figure 5. input frame

In this system, we adopt the letter size normalization and the position normalization according to the gravity center of the letter for matching processing of the stroke order evaluation, which is described later. Finally, the data of an input character includes stroke features, such as a termination code of the stroke and an end code of the input character in addition to the position coordinate of the handwriting.

2.3. Reference database

In order to evaluate the stroke order of the practice character, the system refers to a reference database consisting of model characters in the Web server. The reference character database is formed by on-line input of the block style character of the Japanese textbook according to the suitable stroke order. The reference database in this system includes 2000 typical characters of the daily-use Kanji. It contains the stroke order which is based on literature[2] about 2000 daily-use standard character species in Japan. An input character data has 120 bytes, the total size of the reference database is 240KB. Figure 6 shows some Kanji in

Proceedings of the International Conference on Computers in Education (ICCE'02)
0-7695-1509-6/02 $17.00 © 2002 IEEE

IEEE COMPUTER SOCIETY

Authorized licensed use limited to: Universite de Geneve. Downloaded on October 09,2025 at 08:12:05 UTC from IEEE Xplore. Restrictions apply.

Figure 6. Example of Kanji character in the reference database

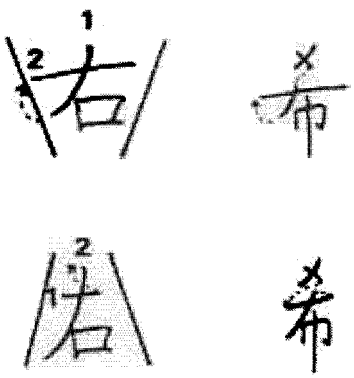

Figure 7. Character shape

the database.

2.4. Stroke order evaluation

In Japanese language, the stroke order is essential because the number of strokes of a Kanji is greater than that of alphabet. For writing beautiful characters, we must write characters in the proper stroke order. The stroke order can easily be extracted, because the input practice character in this system is a time serious data which consist of the position coordinates ranging written sequence of the character. A proper stroke order is not decided in the rule. The stroke order is taught from the forefather as a traditional writing rule for writing a beautiful handwriting at the moderate speed. For example, the character shape of the handwriting depends on the each stroke order as shown Figure 7.

The stroke order is evaluated in comparison with that of the model character in the database. That is, the input

Model Character j

Input character i

	1	2	3	4
1	d_{11}	d_{12}	d_{13}	d_{14}
2	d_{21}	d_{22}	d_{23}	d_{24}
3	d_{31}	d_{32}	d_{33}	d_{34}
4	d_{41}	d_{42}	d_{43}	d_{44}

Figure 8. Interstroke distance matrix D

character is matched to the model character by using the interstroke distance matrix D. A stroke is represented by three points: start, middle and end points of the stroke data. This method is called the three point stroke approximation. It is effective in case Kanji that has a lot of straight line elements[1].

Suppose that i and j denotes a stroke number of input and reference character, respectively. The element d_{ij} of the interstroke distance matrix D is calculated as follows:

where p_1 and p_2 are the position coordinates of the input and the model character respectively.

Figure 8 shows the example of the interstroke distance matrix D. The i-th stroke of the input character correspond to j-th stroke of the model in which interstroke distance d_{ij} is minimum. In case the proper stroke order, the diagonal elements d_{11}, d_{22}, $\cdots d_{44}$ have the minimum values in each stroke number. For example, the element d_{22} is the minimum among the stroke distance d_{2j} (j=1$\cdots$4) for the 2nd stroke. From the above results, the 2nd stroke of the input character is the proper order. The element d_{34} is the minimum among d_{3j} (j=1$\cdots$4) for the 3rd stroke. In this case, it becomes evident that the 3rd stroke of the input character was improper sequence in writing. This means that the 3rd stroke of the input character must be written at 4th.

3. Experimental Results

The learner inputs a practice character into the frame(figure 5) from the mouse by hand. After inputting a character, the system sends the character data to the Web server (figure 2). The 2000 daily-use kanji are stored in the reference database. The system extracts the model character from the database by CGI, and it compares the stroke order of the input character with that of the model character. The guidance is generated based on the template and the result.

Proceedings of the International Conference on Computers in Education (ICCE'02)
0-7695-1509-6/02 $17.00 © 2002 IEEE

IEEE COMPUTER SOCIETY

Authorized licensed use limited to: Universite de Geneve. Downloaded on October 09,2025 at 08:12:05 UTC from IEEE Xplore. Restrictions apply.