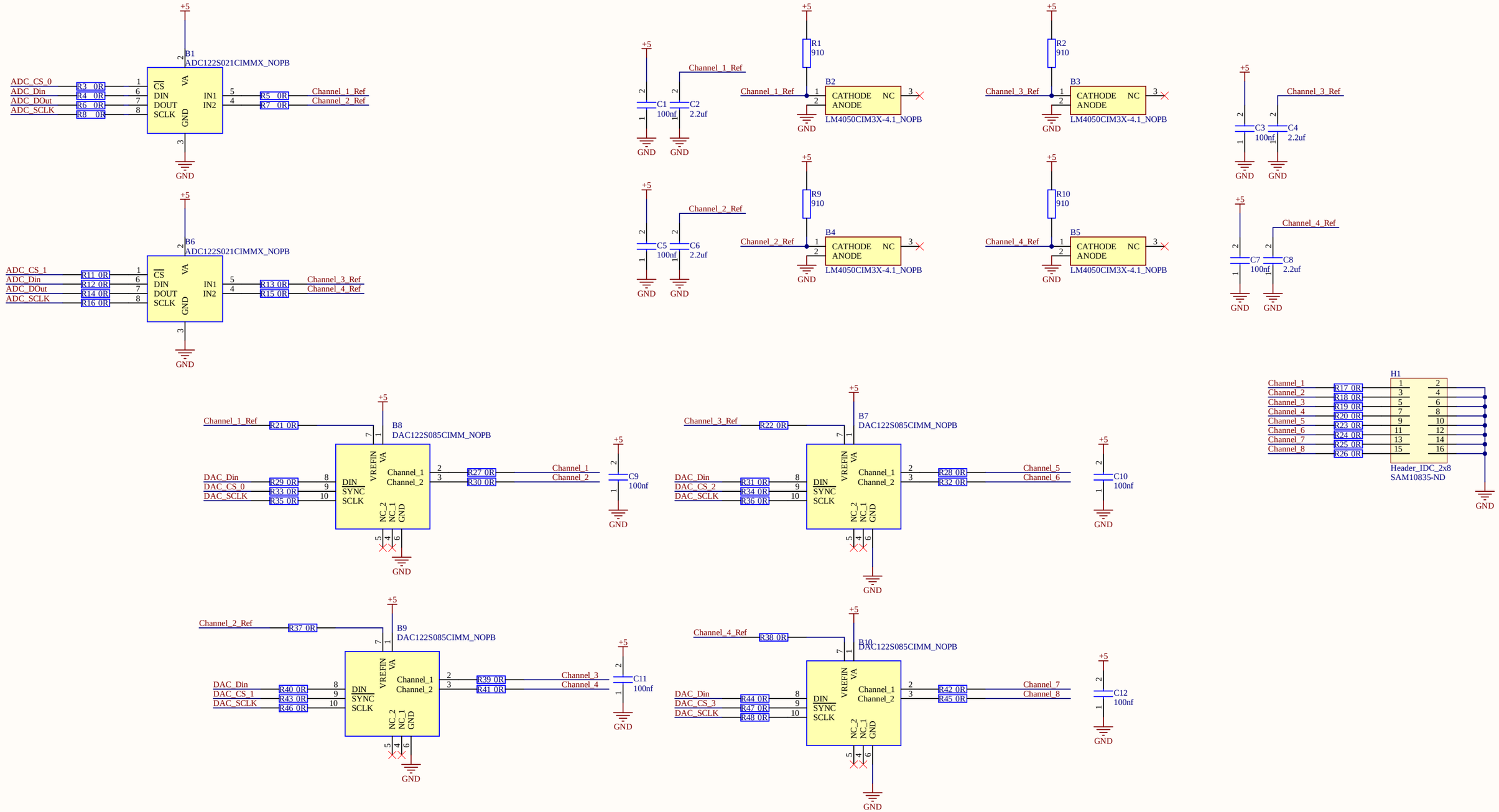

Title: DAC IO Board	
Project: DAC_IO.PrjPcb	
ABS Data Systems, Inc. 317 Sebastian Crossings Blvd Sebastian, FL 32958 (858) 254-7776 www.absdatasystems.com	Engineer: Terry D. Schevler
	Date: 05/10/2023 Revision 1.0
	Sheet 1 of 3

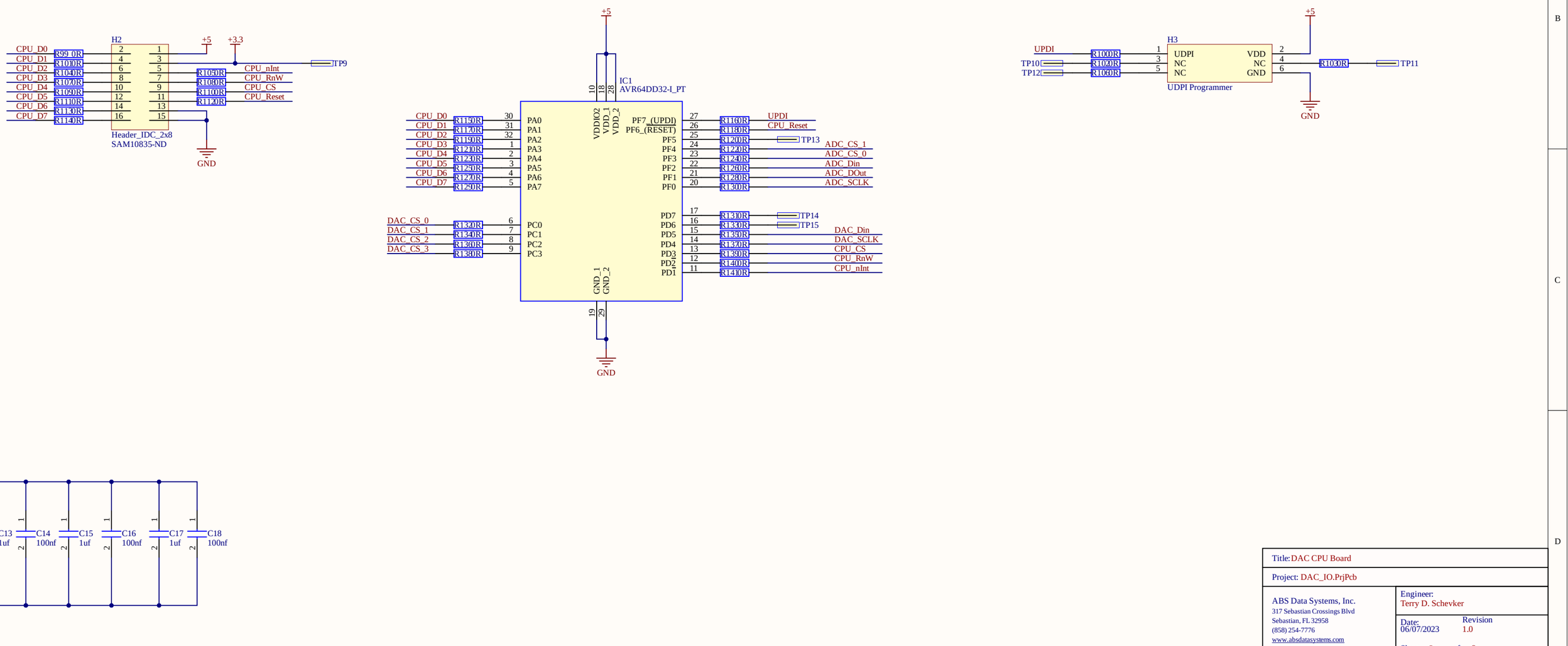

Title: DAC CPU Board

Project: DAC_IO.PrjPcb

ABS Data Systems, Inc.
317 Sebastian Crossings Blvd
Sebastian, FL 32958
(858) 254-7776
www.absdatasystems.com

Engineer:
Terry D. Schevker

Date: 06/07/2023

Revision 1.0

Sheet 2 of 3

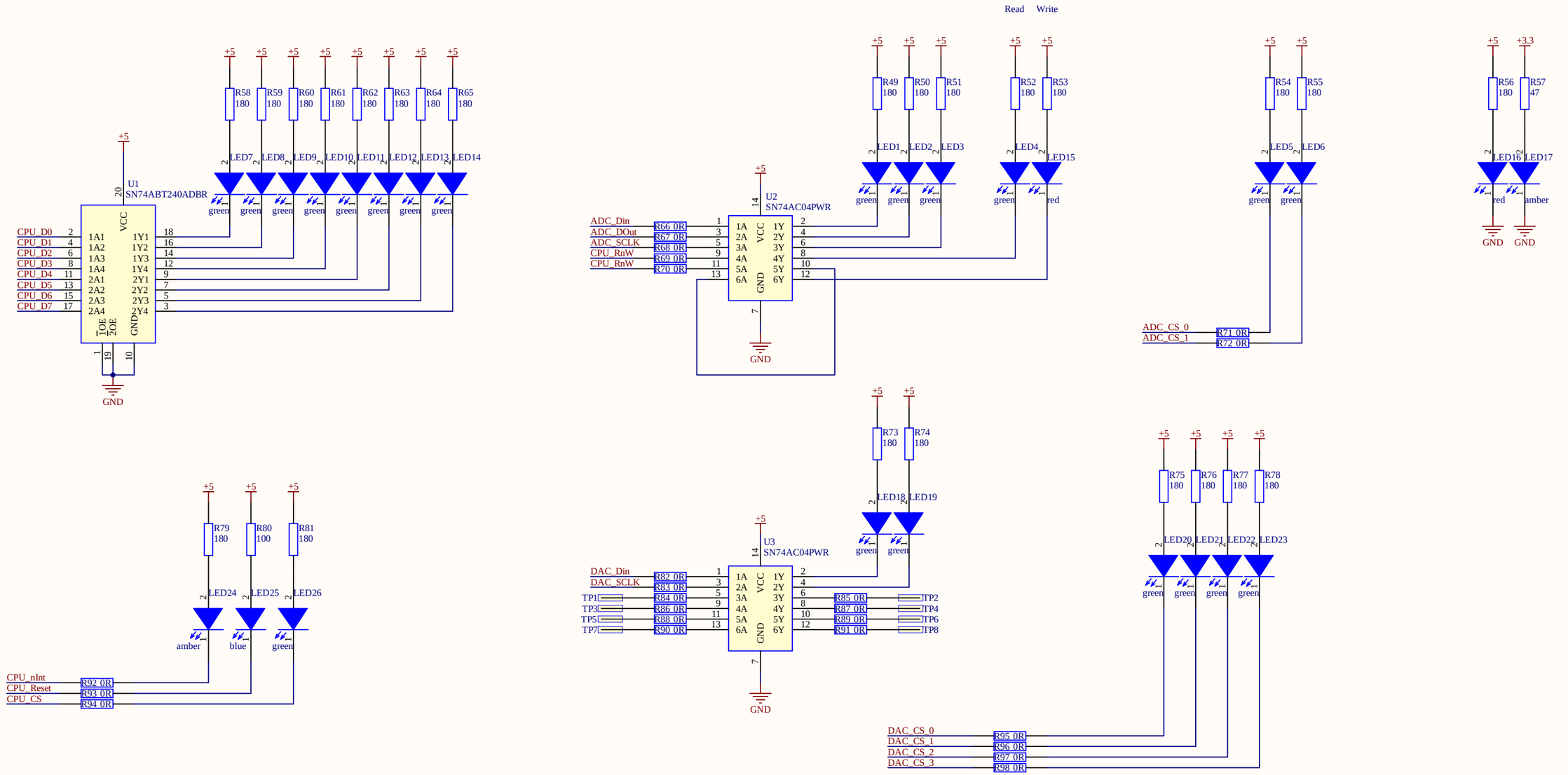

Title: DAC LED Monitor

Project: DAC_IO.PrjPcb

ABS Data Systems, Inc.
317 Sebastian Crossings Blvd
Sebastian, FL 32958
(858) 254-7776
www.absdatasystems.com

Engineer:
Terry D. Schevker

Date: 05/10/2023
Revision 1.0

Sheet 3 of 3