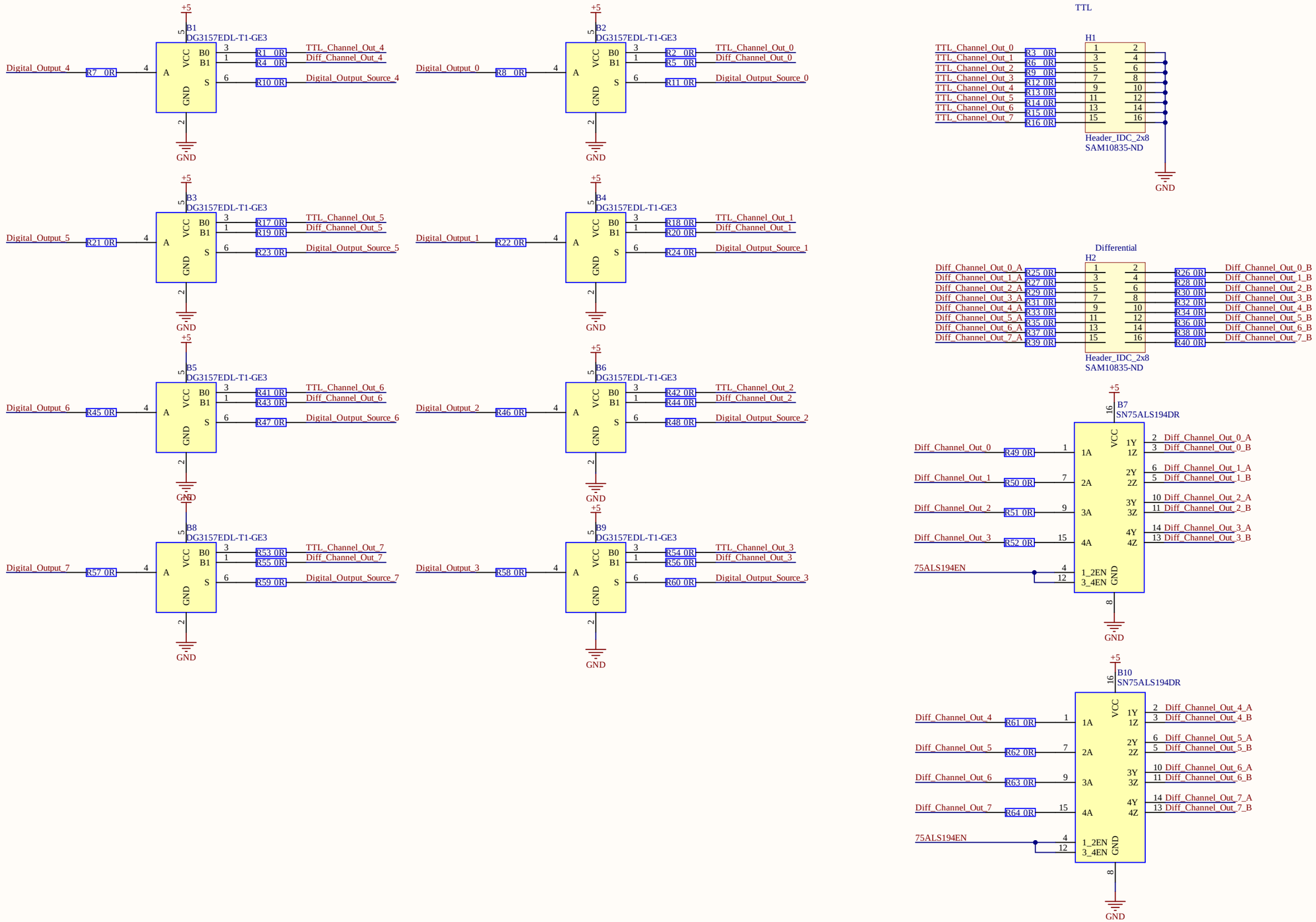

Title: TTL Output Card

Project: Digital_Output_Card_V1_1.PrjPcb

ABS Data Systems, Inc.
317 Sebastian Crossings Blvd
Sebastian, FL 32958
(858) 254-7776
www.absdatasystems.com

Engineer:
Terry D. Schevker

Date: 05/10/2023

Revision 1.0

Sheet 1 of 3

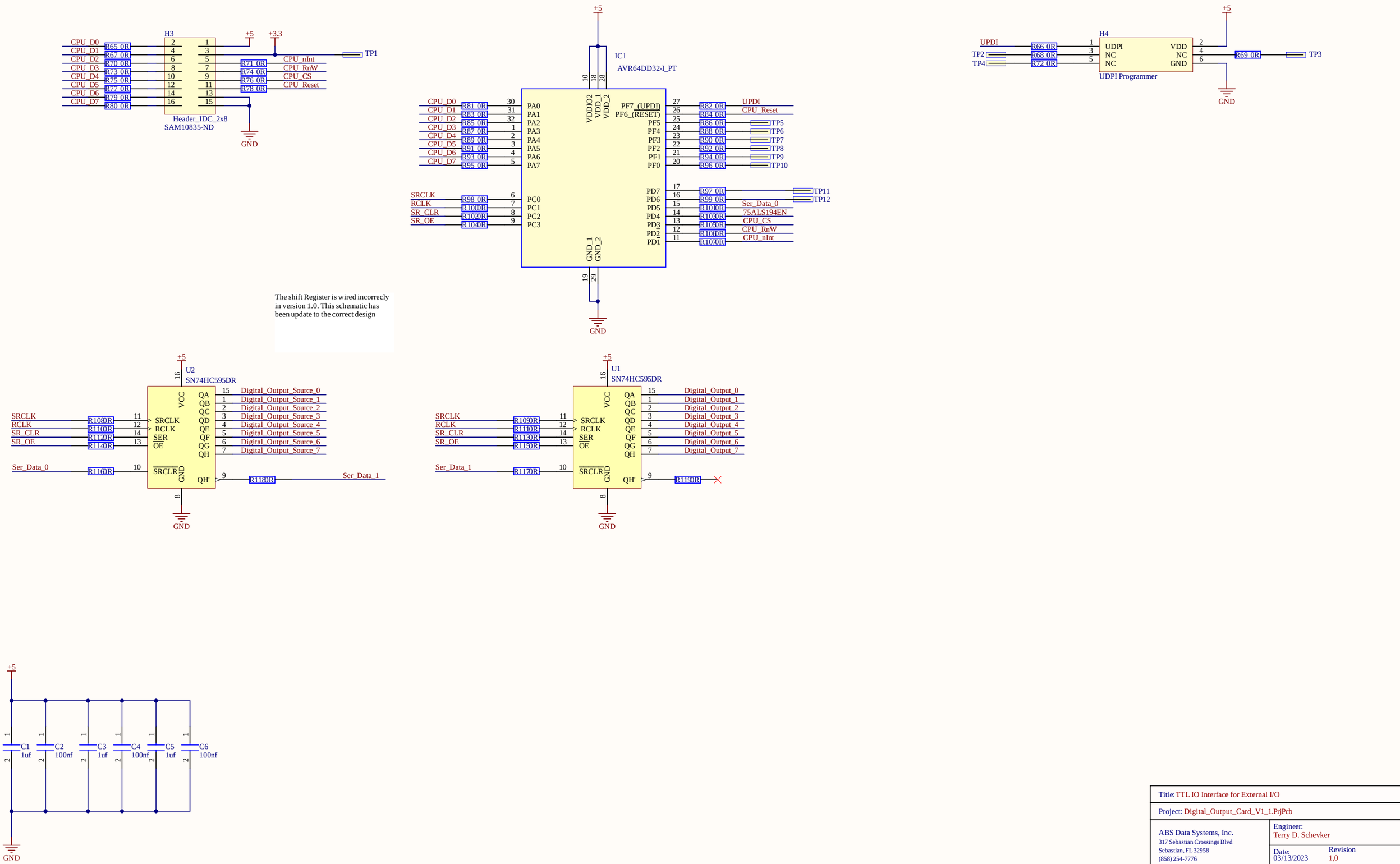

Title: TTL IO Interface for External I/O

Project: Digital_Output_Card_V1_1.PrjPcb

ABS Data Systems, Inc.
317 Sebastian Crossings Blvd
Sebastian, FL 32958
(858) 254-7776
www.absdatasystems.com

Engineer:
Terry D. Schevker

Date: 03/13/2023

Revision 1,0

Sheet 2 of 3

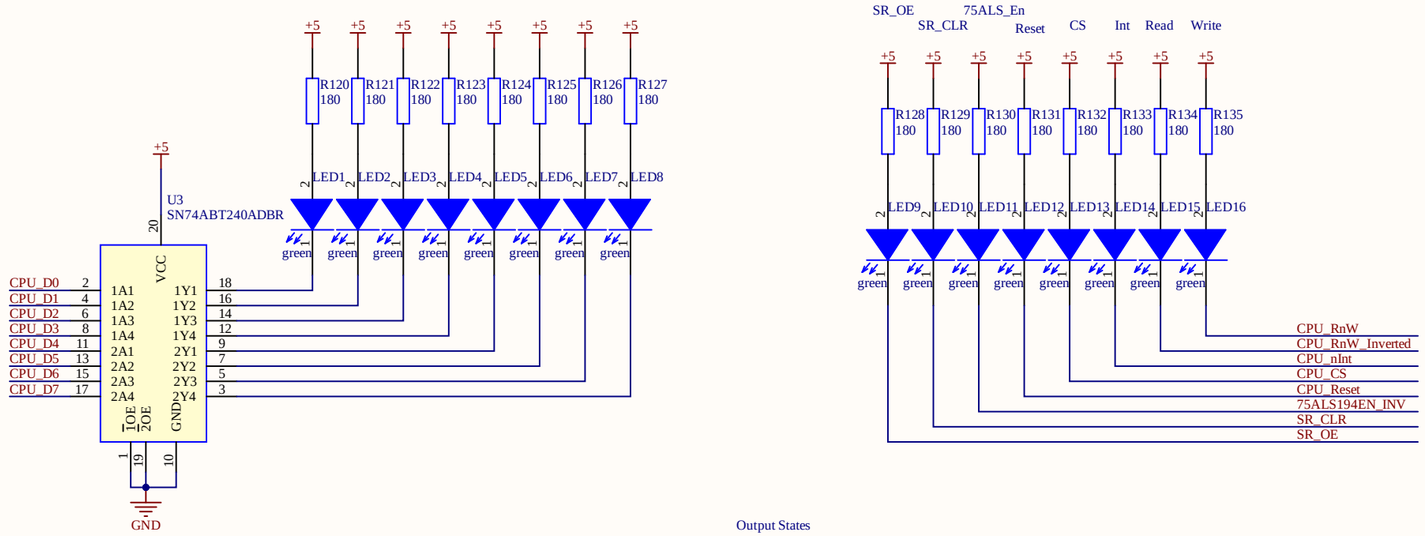

Output States

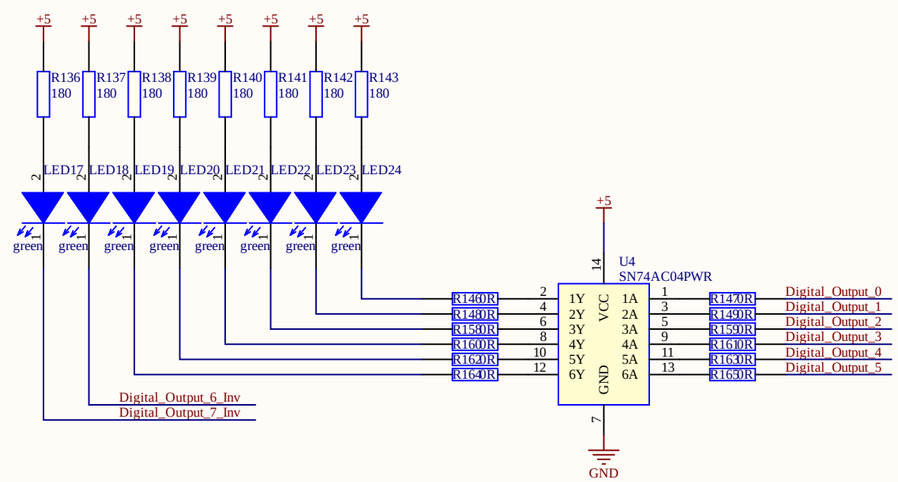

75ALS194EN term is inverted. I have corrected the schematic. and hand corrected the board

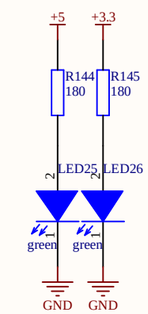

Output Source States

TTL = L (Light On)

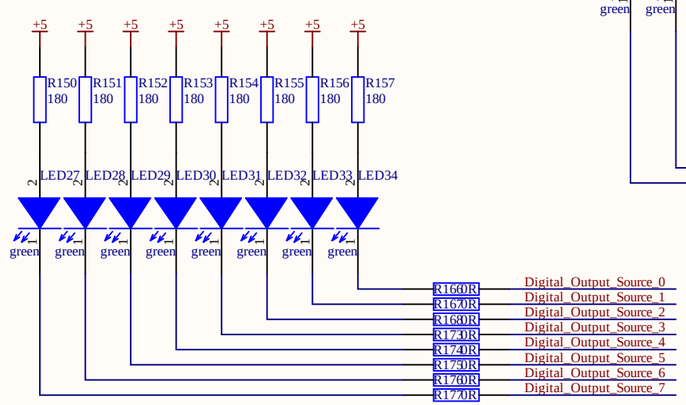

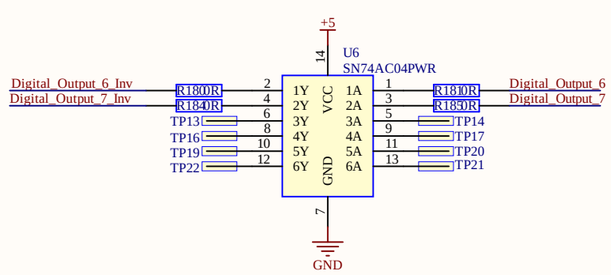

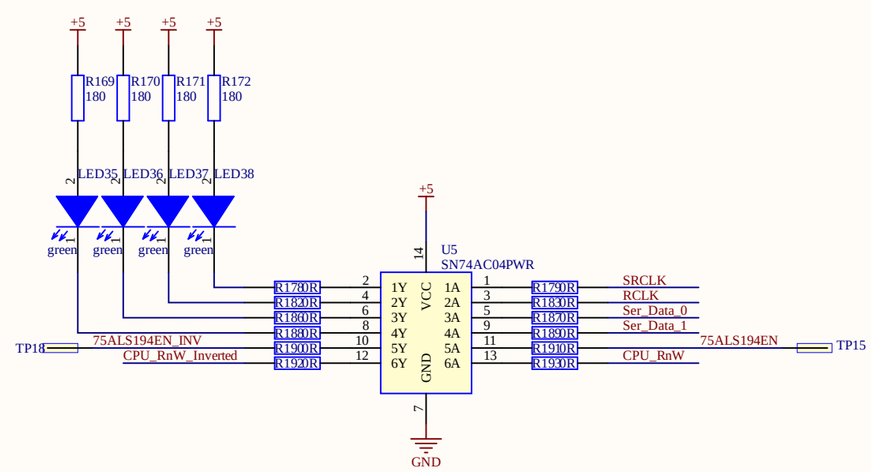

Title: TTL IO LED Monitor	
Project: Digital_Output_Card_V1_1.PrjPcb	
ABS Data Systems, Inc. 317 Sebastian Crossings Blvd Sebastian, FL 32958 (858) 254-7776 www.absdatasystems.com	Engineer: Terry D. Schevker Date: 05/10/2023 Revision 1.0 Sheet 3 of 3