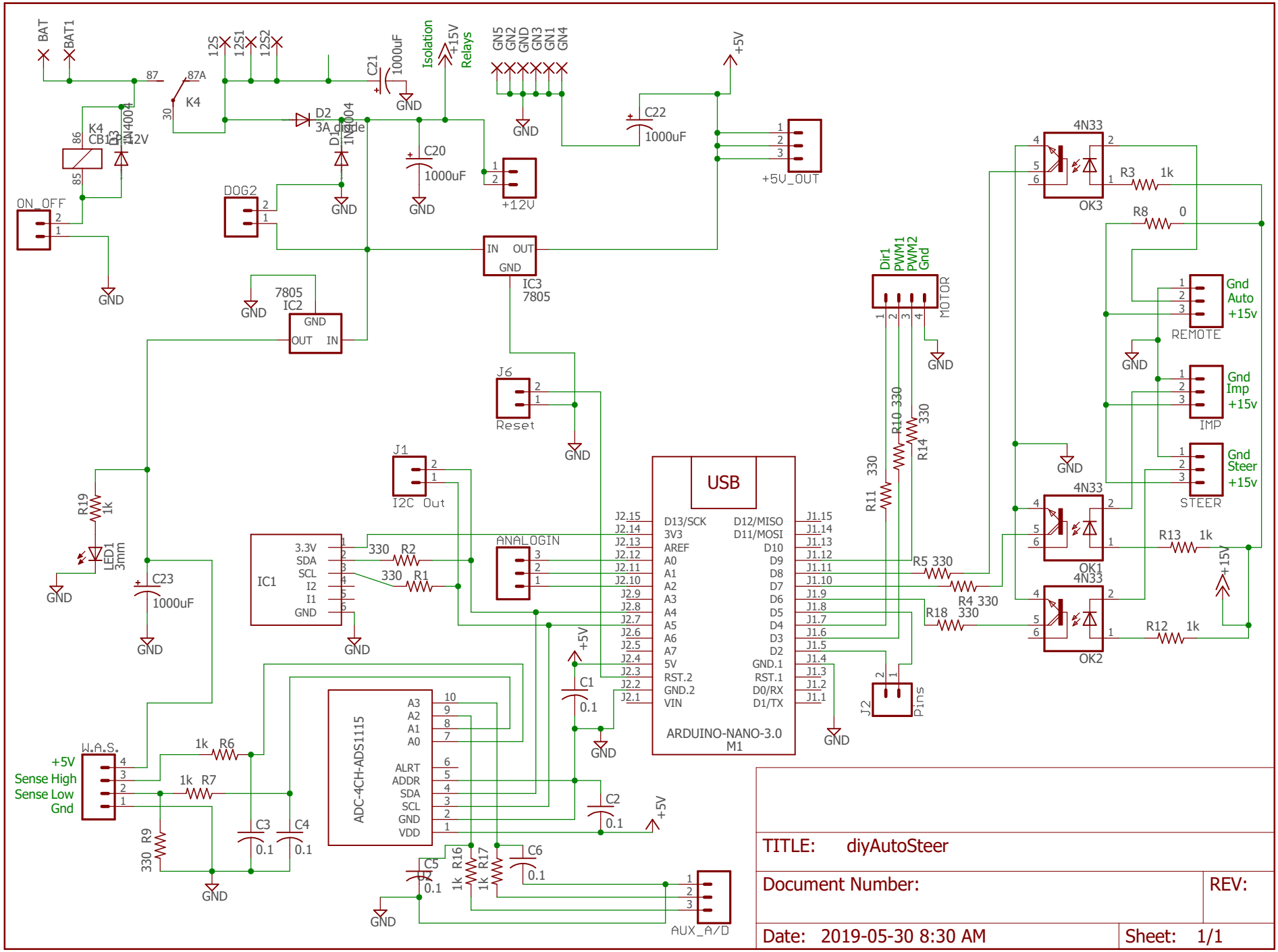
BAT
BAT1
87
87A
K4
30
86
85
K4
CB12V
D3
1N4004
ON_OFF
GND
12S
12S1
12S2
C21
1000uF
Isolation
+15V
Relays
GN5
GN2
GND
GN3
GN1
GN4
D2
3A_diode
D1
1N4004
C20
1000uF
+12V
C22
1000uF
+5V
+5V_OUT
DOG2
IN
OUT
GND
IC3
7805
7805
IC2
GND
OUT
IN
J6
Reset
J1
I2C Out
R19
1k
LED1
3mm
C23
1000uF
IC1
3.3V
SDA
SCL
I2
I1
GND
330
R2
330
R1
ANALOGIN
USB
D13/SCK
3V3
AREF
A0
A1
A2
A3
A4
A5
A6
A7
5V
RST.2
GND.2
VIN
D12/MISO
D11/MOSI
D10
D9
D8
D7
D6
D5
D4
D3
D2
GND.1
RST.1
D0/RX
D1/TX
ARDUINO-NANO-3.0
M1
J2.15
J2.14
J2.13
J2.12
J2.11
J2.10
J2.9
J2.8
J2.7
J2.6
J2.5
J2.4
J2.3
J2.2
J2.1
J1.15
J1.14
J1.13
J1.12
J1.11
J1.10
J1.9
J1.8
J1.7
J1.6
J1.5
J1.4
J1.3
J1.2
J1.1
Dir1
PWM1
PWM2
Gnd
MOTOR
R10 330
R14 330
R11 330
R5 330
R4 330
R18 330
J2
Pins
4N33
OK3
R3
1k
R8
0
Gnd
Auto
+15v
REMOTE
Gnd
Imp
+15v
IMP
Gnd
Steer
+15v
STEER
OK1
R13
1k
OK2
R12
1k
+15V
W.A.S.
+5V
Sense High
Sense Low
Gnd
1k
R6
1k
R7
330
R9
C3
0.1
C4
0.1
ADC-4CH-ADS1115
A3
A2
A1
A0
ALRT
ADDR
SDA
SCL
GND
VDD
C1
0.1
C2
0.1
C5
0.1
R16
1k
R17
1k
C6
0.1
AUX_A/D
TITLE: diyAutoSteer
Document Number:
REV:
Date: 2019-05-30 8:30 AM
Sheet: 1/1