Linearization of LSTM Networks and MIMO State-Space Modeling

Jesús María Juárez Ferreras*
University of Oviedo
uo25805@uniovi.es

Iván José Machón González†
University of Oviedo
machonivan@uniovi.es

April 27, 2026

Abstract— The increasing complexity of modern MIMO dynamic systems has motivated the use of Long Short-Term Memory (LSTM) networks for modeling nonlinear temporal behavior. Despite their predictive capabilities, LSTM networks pose challenges for classical control design due to their high dimensionality and nonlinearity. This work presents a systematic methodology to transform a trained LSTM network into a reduced-order, discrete-time linear state-space model that preserves its dominant dynamics. The approach integrates piecewise linearization around multiple operating points, recalibration of Batch Normalization, and fully connected layers, followed by model reduction and optimization. Stability, controllability, and observability of the linearized model are verified, and the resulting eight-state optimized system achieves high fidelity in reproducing the original 300-state LSTM outputs, with RMSE ≈ 7.91 and $R^2 \approx 0.798$. The framework enables classical control analysis, transfer function derivation, and real-time implementation, bridging the gap between nonlinear data-driven modeling and control-oriented representations. Future extensions include advanced control design, state estimation, hybrid physics-informed architectures, and adaptive online modeling.

Keywords: Long Short Term Memory . Dynamics identification . Nonlinear . Transfer function . State feedback control

1 Introduction

The increasing complexity of modern dynamic systems in engineering and process control has driven the adoption of advanced machine learning techniques, particularly recurrent neural networks (RNNs), for modeling and prediction [**?** **?**]. Among RNN architectures, Long Short-Term Memory (LSTM) networks have demonstrated remarkable capability in capturing long-term temporal dependencies and nonlinear dynamics [1, 2], making them highly suitable for multi-input multi-output (MIMO) systems with intricate temporal behavior. Despite their predictive power, the inherent nonlinearity and high dimensionality of LSTM networks pose significant challenges for classical control design, stability assessment, and interpretability [3, 4]. Consequently, there is a growing interest in developing methodologies that bridge the gap between the nonlinear neural network representation and linear system theory, enabling the application of well-established control and optimization tools [5, 6].

This work presents a systematic approach for transforming a trained LSTM network into a computationally efficient and interpretable linear state-space model while preserving its essential dynamic characteristics. The methodology is founded on piecewise linearization [7], in which the nonlinear LSTM dynamics are approximated locally around multiple operating points using Jacobian matrices with respect to the hidden states and inputs. These local linearizations are then aggregated into a globally representative model through state-dependent weighting, emphasizing regions of the state space that are dynamically dominant. This approach allows for a linear approximation that captures the average behavior of the LSTM network across its operational envelope, enabling stability analysis, controllability and observability assessment, and subsequent model reduction [4].

Integration of the Batch Normalization and fully connected layers into the linearized framework is achieved through a recalibration of layer parameters based on activation statistics [8]. This ensures that the combined linear mapping accurately reflects the original network's input–output relationship. By projecting the full LSTM state vector onto the hidden-state subspace, the model maintains a compact representation of the system dynamics relevant for output prediction, facilitating numerical efficiency and interpretability. Furthermore, the linearized model is subjected to balanced truncation and extended optimization procedures, reducing its dimensionality while refining the state-space matrices

*PhD Programme in Energy and Process Control
†Dept. of Electrical, Electronic, Communications, and Systems Engineering

to minimize discrepancies between the model outputs and actual system measurements.

The resulting framework provides a discrete-time state-space representation that not only approximates the nonlinear behavior of the original LSTM network but also enables classical control-oriented analysis. Eigenvalue inspection confirms the stability of the linearized system, while evaluation of controllability and observability ensures that the essential dynamics remain accessible for control design. Time-domain simulations and error analyses demonstrate that the reduced-order optimized model accurately reproduces the dominant behavior of the original system, even under aggressive order reduction. Moreover, the derivation of discrete-time transfer functions allows for further analysis in the frequency domain, facilitating the application of traditional control and optimization strategies to a system originally modeled through complex neural computations.

In summary, this methodology establishes a rigorous pathway for converting highly nonlinear LSTM networks into tractable linear models that retain their predictive fidelity and dynamic characteristics. By combining piecewise linearization, recalibrated layer integration, and model reduction with optimization, the proposed approach delivers a compact, numerically robust, and interpretable state-space representation suitable for control design, real-time implementation, and further analytical investigation. This framework bridges the gap between advanced data-driven modeling and classical control theory, providing a versatile tool for the study and management of complex dynamic systems.

2 Theoretical Framework

2.1 LSTM Cell and Layer Operations

Each LSTM cell receives the input vector $\mathbf{u}_t \in \mathbb{R}^{n_u}$, the previous hidden state $\mathbf{h}_{t-1}$, and the previous cell state $\mathbf{c}_{t-1}$, and produces new states $(\mathbf{h}_t, \mathbf{c}_t)$. The internal operations are given by [1]:

$$
\begin{aligned}
f_t &= \sigma(W_f u_t + U_f h_{t-1} + b_f), \\
i_t &= \sigma(W_i u_t + U_i h_{t-1} + b_i), \\
\tilde{c}_t &= \tanh(W_c u_t + U_c h_{t-1} + b_c), \\
c_t &= f_t \odot c_{t-1} + i_t \odot \tilde{c}_t, \\
o_t &= \sigma(W_o u_t + U_o h_{t-1} + b_o), \\
h_t &= o_t \odot \tanh(c_t),
\end{aligned}
\tag{1}
$$

where $\sigma(\cdot)$ denotes the sigmoid activation and $\odot$ is the Hadamard product. The gating mechanism allows the network to store or discard information over long temporal horizons, mitigating the vanishing gradient problem originally identified in [?].

Internally, the weight matrices are stored in concatenated blocks for efficient computation:

$$
W = \begin{bmatrix} W_i \\ W_f \\ W_c \\ W_o \end{bmatrix}, \quad U = \begin{bmatrix} U_i \\ U_f \\ U_c \\ U_o \end{bmatrix}, \quad b = \begin{bmatrix} b_i \\ b_f \\ b_c \\ b_o \end{bmatrix}. \tag{2}
$$

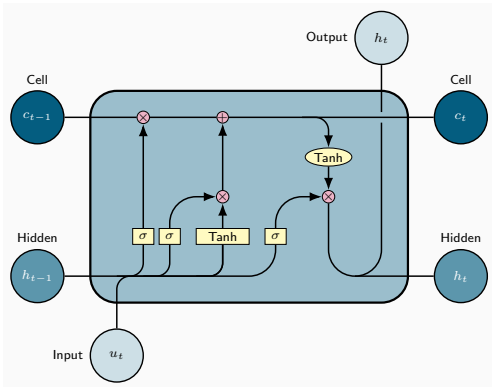

Figure 1: Structure of the recurrent LSTM cell.

A comprehensive review of LSTM variants and architectures is provided in [2].

2.1.1 State-Space Representation of an LSTM Layer

Consider a single-layer LSTM with cell states c_t and hidden states h_t. Defining the complete state vector as

$$
\chi_t = \begin{bmatrix} c_t \\ h_t \end{bmatrix}, \qquad n_x = n_c + n_h,
$$

the LSTM can be interpreted as a discrete-time nonlinear state-space system [?]:

$$
\chi_{t+1} = f_{\text{LSTM}}(\chi_t, u_t, b), \qquad y_t = g_{\text{LSTM}}(\chi_t) = C\chi_t + b_y,
$$

where matrix C selects the hidden state as output, following standard RNN practice [?].

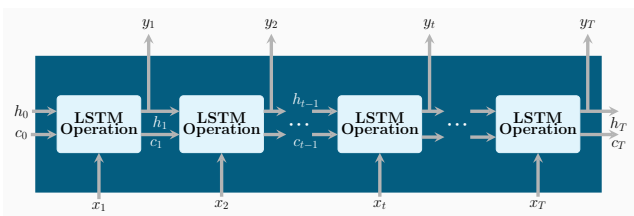

Figure 2: State-space interpretation of an LSTM layer: $s_t = f(s_{t-1}, x_t)$, $y_t = g(s_t)$.

Explicit LSTM updates can be rewritten as:

$$
\begin{aligned}
c_{t+1} &= f_t \odot c_t + i_t \odot \tilde{c}_t, \\
h_{t+1} &= o_t \odot \sigma_c(c_{t+1}), \\
y_t &= Ch_t + b_y,
\end{aligned}
$$

where the nonlinear activations σ_c and σ_g create a highly nonlinear system, suitable for complex dynamic modeling [?].

This representation links deep learning with classical control theory, enabling stability, observability and controllability analyses, as shown in Table 1.

Table 1: LSTM network model vs. state-space model.

	LSTM Network	State Space
Memory	Gated cell and hidden state	State and output equations
Temporal evolution	Recurrent unfolding	Difference equations
Structure	Recurrent neural network	Dynamic system model
Interpretability	Limited	High (explicit equations)

2.1.2 Equivalent Linear Model

To theoretically obtain a transfer function, the nonlinear LSTM equations can be linearized around an equilibrium point using a first-order Taylor expansion, following classical nonlinear systems analysis [?]. The sigmoid and hyperbolic tangent activations can be approximated as

$$\sigma_g(x) \approx 0.5 + 0.25x, \qquad \tanh(x) \approx x,$$

assuming small perturbations around the operating point.

Organizing the LSTM in state-space form gives

$$\begin{bmatrix} c^+ \\ h^+ \end{bmatrix} \approx A \begin{bmatrix} c \\ h \end{bmatrix} + Bu + b,$$

where matrices A and B correspond to Jacobians:

$$A = \frac{\partial(c^+, h^+)}{\partial(c, h)}, \qquad B = \frac{\partial(c^+, h^+)}{\partial u}.$$

The output is written as

$$y = Ch^+ + b_y.$$

This linearization yields a compact LTI representation valid near the operating point, from which transfer functions can be obtained—useful for control design and theoretical analysis [5].

To extend the validity of the linear approximation beyond a single operating point, **piecewise linearization** can be applied. The standard linearization is computed at points (c_0, h_0, u_0) visited by the network, yielding local matrices (A_i, B_i), which can be combined, e.g., via a weighted average, to form a global LTV model. Both single-point and piecewise linearization rely on the first-order Taylor expansion principle, but piecewise linearization captures dynamics over a wider range. Linearizing a nonlinear system at multiple points uses local Jacobians, following classical control theory [7].

3 Methodology of the mathematical model

3.1 Piecewise Linearization

To obtain a linear approximation of the nonlinear recurrent neural network (RNN) dynamics, a piecewise linearization approach with state-dependent weighting was applied. The internal LSTM cell states (c_t, h_t) were iteratively propagated using the trained network parameters for each input sample, while the Jacobian matrices with respect to both the hidden state and the input were computed at every time step.

At each iteration, the local state-space representation of the LSTM was described by

$$\begin{bmatrix} \Delta c_{t+1} \\ \Delta h_{t+1} \end{bmatrix} = A_t \begin{bmatrix} \Delta c_t \\ \Delta h_t \end{bmatrix} + B_t \, \Delta u_t,$$

where A_t and B_t are the Jacobians of the nonlinear update equations with respect to the state and the input, respectively. To mitigate the influence of outlier dynamics and emphasize dominant operating regions, a weighting factor proportional to the norm of the instantaneous state vector was introduced. The globally linearized model was then obtained by computing the weighted average of all local linearizations:

$$A_{\text{avg}} = \frac{\sum_t w_t A_t}{\sum_t w_t}, \qquad B_{\text{avg}} = \frac{\sum_t w_t B_t}{\sum_t w_t}.$$

Finally, the averaged matrices were used to construct a discrete-time state-space model of the form

$$x_{k+1} = A_{\text{avg}} x_k + B_{\text{avg}} u_k, \qquad y_k = Cx_k + Du_k,$$

which represents the linearized approximation of the nonlinear LSTM-based system around its mean operating point. The controllability of the resulting model was subsequently verified to ensure that the identified linear system preserves the essential dynamic behavior of the original nonlinear plant.

3.1.1 Linearized Model Analysis

The stability and structural properties of the linearized LSTM model were evaluated around the average operating point. The system was described by the set of matrices $\{A_{\text{avg}}, B_{\text{avg}}, C_{\text{total}}\}$, obtained after linearizing the discrete-time model.

First, the eigenvalues of A_{avg} were computed to assess system stability. A discrete-time system is considered stable if all eigenvalues of A_{avg} lie within the unit circle of the complex plane, that is, if $\rho(A_{\text{avg}}) < 1$.

Next, the controllability and observability properties were evaluated using the standard matrices:

$$\mathcal{C} = \text{ctrb}(A_{\text{avg}}, B_{\text{avg}}), \quad \mathcal{O} = \text{obsv}(A_{\text{avg}}, C_{\text{total}}).$$

The rank of both matrices was compared with the state-space dimension n_x. The system was considered fully controllable and observable if $\text{rank}(\mathcal{C}) = \text{rank}(\mathcal{O}) = n_x$.

Finally, the numerical condition of these matrices was analyzed as an indicator of numerical robustness. Condition numbers higher than 10^6 suggest potential ill-conditioning in the linearized representation.

Overall, the results showed that the linearized model exhibited eigenvalues within the unit circle, was fully controllable and observable, and its associated matrices had a suitable numerical condition for subsequent optimization and control stages.

3.1.2 Recalibrated Batch Normalization and Fully-Connected Layer Integration

The Batch Normalization (BatchNorm) layer was recalibrated using the activation statistics obtained from the predicted hidden states h_{pred}. The scale and offset parameters γ and β were extracted from the third layer of the trained network, and the normalization was applied according to the standard formulation:

$$X_{\text{BN}} = \frac{h_{\text{pred}} - \mu_{\text{BN}}}{\sqrt{\sigma_{\text{BN}}^2 + \epsilon}}, \quad h_{\text{BN}} = \gamma \odot X_{\text{BN}} + \beta,$$

where μ_{BN} and σ_{BN}^2 denote the batch mean and variance, respectively, and ϵ is a small constant added for numerical stability.

Following the recalibration, the fully connected (FC) layer parameters were manually reconstructed from the fourth network layer, with weight matrix W_{FC} and bias vector b_{FC}. The output of the affine transformation was computed as:

$$y_{\text{FC}} = h_{\text{BN}} W_{\text{FC}}^\top + b_{\text{FC}}^\top$$

To integrate BatchNorm and the fully connected layer into a single equivalent affine mapping, the transformation was expressed as:

$$W_{\text{total}} = W_{\text{FC}} \, \text{diag}\left(\frac{\gamma}{\sqrt{\sigma_{\text{BN}}^2 + \epsilon}} \right),$$

$$b_{\text{total}} = W_{\text{FC}} \left(\beta - \frac{\gamma \odot \mu_{\text{BN}}}{\sqrt{\sigma_{\text{BN}}^2 + \epsilon}} \right) + b_{\text{FC}}$$

This formulation allows the BatchNorm and FC operations to be merged into a single linear transformation, facilitating model simplification and subsequent analysis. The combined output matrices for the linearized state-space representation were defined as:

$$C_{\text{total}} = W_{\text{total}} S_h, \quad D_{\text{total}} = \mathbf{0},$$

where $S_h = [\mathbf{0}_{n_h \times (n_x - n_h)} \; I_{n_h}]$ selects the hidden-state components relevant to the output layer.

This recalibration ensures numerical consistency between the trained neural network and its equivalent linearized state-space representation.

3.1.3 Complete LSTM–BatchNorm–Fully Connected State-Space Model

The complete discrete-time state-space model was constructed by integrating the linearized LSTM dynamics with the recalibrated Batch Normalization and Fully Connected (FC) layers. The model parameters were defined as follows: n_h denotes the number of hidden units, $n_x = 2n_h$ the total number of states, n_y the number of outputs, and n_u the number of inputs.

To ensure correct mapping between the composite state vector $x(k) = [c(k); h(k)]$ and the hidden-state component $h(k)$, a selection matrix was defined as:

$$S_h = \begin{bmatrix} \mathbf{0}_{n_h \times (n_x - n_h)} & I_{n_h} \end{bmatrix},$$

which extracts $h(k)$ from the full state vector.

The BatchNorm affine parameters were then computed as:

$$\text{BN}_{\text{scale}} = \text{diag}\left(\frac{\gamma}{\sqrt{\sigma_{\text{BN}}^2 + \epsilon}} \right), \quad \text{BN}_{\text{bias}} = \beta - \frac{\gamma \odot \mu_{\text{BN}}}{\sqrt{\sigma_{\text{BN}}^2 + \epsilon}}.$$

Combining the BatchNorm and FC layers into a single equivalent affine transformation yields:

$$W_{\text{total}} = W_{\text{FC}} \, \text{BN}_{\text{scale}}, \quad b_{\text{total}} = W_{\text{FC}} \, \text{BN}_{\text{bias}} + b_{\text{FC}}.$$

Using these parameters, the output matrices for the overall state-space model were defined as:

$$C_{\text{total}} = W_{\text{total}} S_h, \quad D_{\text{total}} = \mathbf{0}_{n_y \times n_u}.$$

The complete discrete-time system was thus expressed as:

$$\text{sys}_{\text{LSTM+BN+FC}} = \text{ss}(A_{\text{avg}}, B_{\text{avg}}, C_{\text{total}}, D_{\text{total}}, T_s),$$

where A_{avg} and B_{avg} represent the linearized state and input matrices, and T_s is the sampling time.

System stability was verified by inspecting the eigenvalues of A_{avg}. The model was considered stable if all eigenvalues satisfied $|\lambda_i| < 1$, indicating that the system's poles lie within the unit circle of the complex plane. Finally, the complete model's performance was evaluated through time-domain simulation via the `lsim` function, and its accuracy was quantified using the Root Mean Square Error (RMSE) between the simulated output y_{full} and the real measurements:

$$\text{RMSE}_{\text{full}} = \sqrt{\frac{1}{N} \sum_{k=1}^{N} \|y_{\text{full}}(k) - y_{\text{real}}(k)\|^2}.$$

The resulting system was stable, and the obtained RMSE confirmed that the integrated linearized model (LSTM + BatchNorm + FC) preserved the dynamic behavior of the original neural network with high fidelity.

3.1.4 Selection of Hidden States and the Effective State Space

In the proposed state-space formulation of the LSTM, the complete state vector at discrete time step k is defined as

$$x(k) = \begin{bmatrix} c(k) \\ h(k) \end{bmatrix}, \tag{3}$$

where $c(k) \in \mathbb{R}^{n_h}$ denotes the *cell state* (long-term memory) and $h(k) \in \mathbb{R}^{n_h}$ represents the *hidden state* (short-term output) of the LSTM layer. Hence, the total state dimension is $n_{\text{states}} = 2n_h$, and the full state space can be written as $\mathcal{X} = \mathbb{R}^{2n_h}$.

Since the subsequent layers—namely Batch Normalization and the Fully Connected (FC) layer—operate exclusively on the hidden state $h(k)$, it is necessary to extract this component from the full state vector $x(k)$. To achieve this, a *selection matrix* $S_h \in \mathbb{R}^{n_h \times n_{\text{states}}}$ is defined as

$$S_h = \begin{bmatrix} 0_{n_h \times (n_{\text{states}} - n_h)} & I_{n_h} \end{bmatrix}, \tag{4}$$

where I_{n_h} is the identity matrix of dimension n_h. This matrix isolates the hidden-state subspace according to

$$h(k) = S_h \, x(k). \tag{5}$$

Through this operation, the system effectively projects the full LSTM state vector $x(k) \in \mathcal{X}$ onto a lower-dimensional subspace

$$\mathcal{H} = \{ \, h \in \mathbb{R}^{n_h} \mid h = S_h x, \; x \in \mathcal{X} \, \}, \tag{6}$$

which contains all the dynamically relevant components for the network output. This projected space $\mathcal{H}$ constitutes the *effective state space* of the model, in which the observable dynamics are governed by the hidden-state evolution. Consequently, the output equation of the full system can be reformulated as

$$\begin{aligned} y(k) &= C_{\text{total}} \, x(k) + D_{\text{total}} \, u(k) \\ &= W_{\text{total}} \, S_h \, x(k) + D_{\text{total}} \, u(k), \end{aligned}$$

showing that the mapping from internal states to outputs is defined entirely over the hidden-state subspace. This reduction provides a compact and interpretable representation that facilitates the integration of Batch Normalization and Fully Connected layers within a unified state-space framework. It is worth noting that the state-transition matrices A_{avg} and B_{avg} remain unchanged, since the selection process only redefines the output mapping without altering the internal LSTM dynamics.

3.1.5 Model Reduction and Extended Optimization

To obtain a more compact and numerically efficient representation of the complete LSTM-based state-space model, a balanced truncation procedure was applied. Starting from the full discrete-time realization

$$\Sigma_{\text{full}} = (A_{\text{avg}}, B_{\text{avg}}, C_{\text{total}}, D_{\text{total}}, T_s), \tag{7}$$

the system was balanced using the controllability and observability Gramians, and the corresponding singular values of energy were computed:

$$\text{balreal}(\Sigma_{\text{full}}) \;\rightarrow\; g_i, \quad i = 1, \ldots, n_{\text{states}}. \tag{8}$$

The singular values g_i quantify the contribution of each state to the overall input–output energy of the system. States associated with very small g_i values were considered dynamically negligible and were truncated according to a predefined energy threshold ϵ_{th}, leading to a reduced-order model

$$\Sigma_{\text{red}} = (A_{\text{red}}, B_{\text{red}}, C_{\text{red}}, D_{\text{red}}, T_s), \tag{9}$$

where the order $n_{\text{red}} = \sum_i (g_i \geq \epsilon_{\text{th}})$ is selected automatically and optionally limited by a maximum allowed value $n_{\max}$ to ensure numerical stability. This reduction preserves the dominant dynamical modes of the original system while significantly lowering the computational cost.

Following the reduction, an extended optimization step was performed to fine-tune the system matrices of Σ_{red}. The goal is to minimize the root-mean-square error (RMSE) between the model output and the real measured data:

$$J(A, B) = \sqrt{\tfrac{1}{N} \textstyle\sum_{k=1}^{N} \| y_{\text{model}}(k; A, B) - y_{\text{real}}(k) \|_2^2}. \tag{10}$$

Let A_{red} and B_{red} denote the reduced matrices. A subset (or all) of their elements is selected for optimization:

$$\theta_A = \text{vec}(A_{\text{red}}(i, j)), \quad \theta_B = \text{vec}(B_{\text{red}}(i, j)), \tag{11}$$

which are concatenated into a single parameter vector

$$\boldsymbol{\theta} = \begin{bmatrix} \theta_A \\ \theta_B \end{bmatrix} \tag{12}$$

The cost function $J(\boldsymbol{\theta})$ is minimized using a numerical optimization algorithm, such as the quasi-Newton method (`fminunc`) or sequential quadratic programming (SQP, via `fmincon`). At convergence, the optimized parameters yield the updated matrices

$$A_{\text{opt}}, \; B_{\text{opt}} = \text{reshape}(\boldsymbol{\theta}_{\text{opt}}), \tag{13}$$

which define the final, reduced, and optimized state-space model:

$$\Sigma_{\text{opt}} = (A_{\text{opt}}, B_{\text{opt}}, C_{\text{red}}, D_{\text{red}}, T_s). \tag{14}$$

This procedure preserves the essential dynamics of the original system while improving its data-fitting performance and reducing computational complexity, making it suitable for real-time or embedded implementations.

4 Results

4.1 Mathematical model

This section describes the trained LSTM network as a sequential composition of functions corresponding to its layers, and presents an evaluation of its performance.

Sequence Input Layer: The input layer receives the external excitation vector:

$$X_t = \begin{bmatrix} u_1(t) \\ u_2(t) \end{bmatrix}, \qquad u_1(t),\, u_2(t) \in \mathbb{R}^{20001\times 1}.$$

Since this layer applies no transformation, the input is passed directly to the next stage.

LSTM Hidden Layer: The LSTM layer learns the temporal dynamics and produces the hidden state:

$$h_t = \mathrm{LSTM}(X_t).$$

This block is nonlinear due to the internal gating mechanisms and activation functions.

where $\cdot$ denotes matrix multiplication and $\odot$ element-wise multiplication.

Batch Normalization Layer: The Batch Normalization (BN) layer normalizes the LSTM output:

$$\hat{h}_t = \left(\frac{h_t - \mu}{\sqrt{\sigma^2+\varepsilon}}\right) \odot \gamma + \beta,$$

where μ and σ^2 are the batch mean and variance, γ and β are trainable scale and offset parameters, and ε is a small constant for numerical stability.

Fully Connected Output Layer: The normalized features are passed through a fully connected linear mapping:

$$z_t = W_{\mathrm{FC}} \cdot \hat{h}_t + b_{\mathrm{FC}}.$$

Output Layer: The final network prediction is obtained through another affine transformation:

$$y_t = W_{\mathrm{out}} \cdot z_t + b_{\mathrm{out}}.$$

Overall Functional Composition: The complete input–output relation of the trained LSTM network is therefore:

$$y_t = W_{\mathrm{out}} \cdot (W_{\mathrm{FC}} \cdot \mathrm{BN}(\mathrm{LSTM}(X_t)) + b_{\mathrm{FC}}) + b_{\mathrm{out}}.$$

Although the LSTM architecture is inherently nonlinear, its dynamics were reformulated through a piecewise linearization approach to enable the use of transfer functions for stability assessment and classical controller design. In this framework, the Batch Normalization and Fully Connected layers were recalibrated and integrated into a unified linear transformation. This resulting state-space representation preserves the functional cascade of the trained network while providing a computationally efficient surrogate for linear system analysis. Consequently, the dominant dynamics of the original MIMO process are maintained within a structurally interpretable model.

Table 2: Operations between layers in an LSTM network

Connections	Operation type
Input → LSTM	Internal operations of the LSTM: $(\cdot)$ and $(\odot)$ for gates and internal states
LSTM → BN	Output from LSTM to BN, $(\odot)$ is applied element by element if there are skips or internal combinations.
BN → FC	$(\cdot)$ of the normalized output to Fully Connected.
FC → Output	$(\cdot)$ + element-by-element activation.
$(\cdot)$ = matrix multiplication, $(\odot)$ = element-wise multiplication	

As shown in Figure Figure 3, the network structure reflects the linear and nonlinear behavior of each layer.

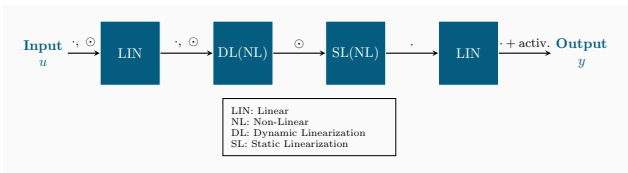

Figure 3: Functional blocks of the LSTM network

4.2 Time-domain analysis of model outputs and errors

Figure 4 shows the time-domain comparison between the actual system outputs and the outputs of the optimized reduced-order model for both y_1 and y_2. The model accurately follows the measured responses, capturing the main dynamic features of the system. Small deviations are observed mainly during fast transient changes, which are expected due to the strong nonlinearities of the original system and the order reduction applied. Overall, the comparison demonstrates that the reduced-order model preserves the essential behavior of the system.

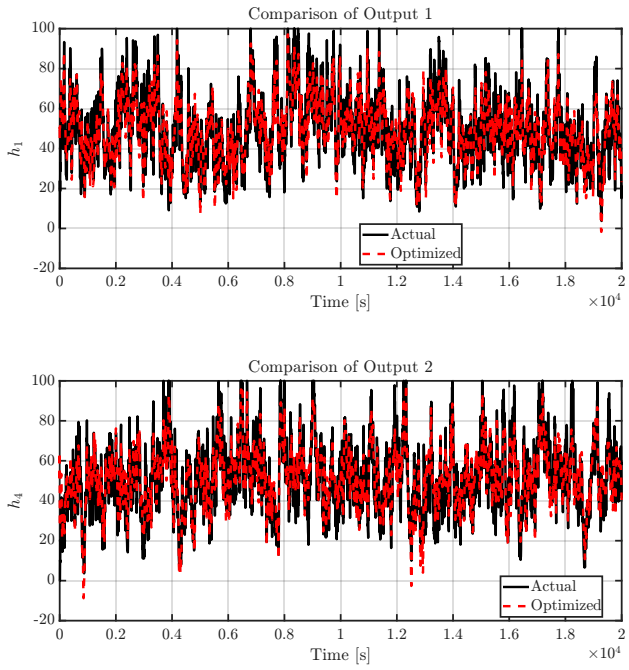

Figure 4: Time-domain comparison of the actual outputs and the outputs of the optimized reduced-order model for y_1 and y_2.

Figure 5 shows the time histories of output errors for both outputs of the optimized reduced-order model, defined as the difference between the reference system outputs and model outputs. The error signals remain bounded and oscillate around zero, indicating that the reduced-order linear model does not exhibit drift or instability. Peak deviations occur mainly during transient regimes, but the model captures dominant system dynamics. Such deviations are expected due to strong nonlinear nature of the original LSTM and aggressive order reduction applied; nonetheless, they remain within acceptable limits for control-oriented analysis and real-time implementation.

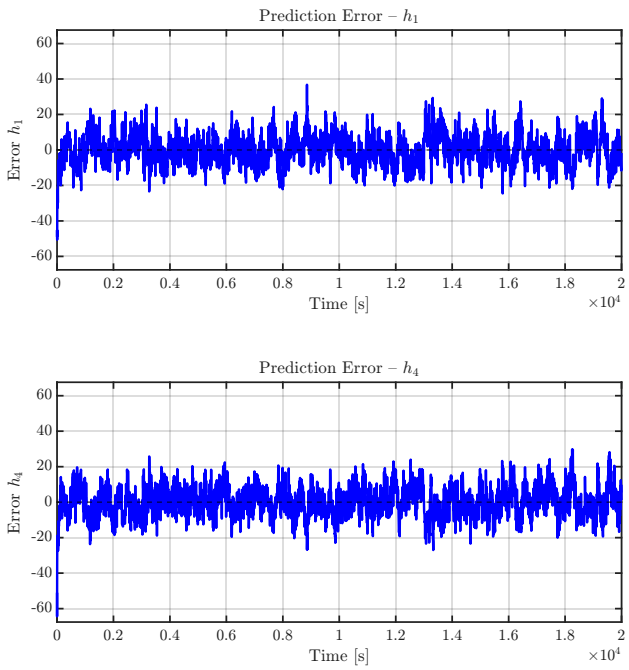

Figure 5: Time-domain output errors of the optimized reduced-order model for outputs y_1 and y_2.

4.3 Dynamic System Evaluation

A low-pass Butterworth filter was applied to the input signals to reduce aliasing effects prior to model identification. The linearization process was performed incrementally, progressing through 10%, 20%, ..., up to 100% of the operating point evaluation.

The system was evaluated at the linearization point, resulting in the confirmation of stability, as all eigenvalues of the full system lie within the unit circle. The complete system properties are summarized in Table 3.

Table 3: Full system properties before reduction.

Number of states	300
Controllability rank	153 / 300
Observability rank	131 / 300
Controllability condition number	1.18×10^{19}
Observability condition number	3.05×10^{21}
RMSE (noise-free)	13.7519
Relative RMSE output 1	13.76%
Relative RMSE output 2	13.75%

The highest natural frequency detected in the system was 10.96 rad/s (1.744 Hz), indicating a minimum recommended sampling frequency of 8.72 Hz (maximum sampling period $T_s = 0.1147$ s) to avoid aliasing. After filtering and frequency analysis, the valid natural frequency range for the system was found to be 0.1537 to 1.1413 rad/s, with damping ratios between 0.89 and 1.00. Warnings regarding potential aliasing were noted for higher frequencies.

The discrete-time system was obtained with a sampling period of $T_s = 1.0$ s. The full-state-space model, including LSTM, batch normalization, and fully connected layers, resulted in 300 states. The model remained stable, and the discrete-time MIMO transfer function exhibited a final RMSE of 13.5750 prior to reduction.

Structural analysis revealed low-energy states and allowed reduction of the system from 300 to 8 states using balanced truncation. The reduced-order system, obtained through balanced truncation from the full 300-state model, was optimized to fine-tune the matrices and minimize prediction error. The final 8-state model achieved an RMSE of 7.9088, an MAE of 6.2920, and a coefficient of determination $R^2 \approx 0.798$ for both outputs, with a relative output error of approximately 7.91%. Although these metrics indicate noticeable deviations in absolute terms compared to the full LSTM model, the reduced system effectively captures the dominant dynamics of the original nonlinear network. This compact and numerically efficient representation preserves the essential system behavior, enabling classical control analysis, stability assessment, and real-time applications, while avoiding the

computational complexity of the full 300-state model. Table 4 summarizes the properties of the optimized reduced-order system.

Table 4: Reduced-order optimized system properties.

Number of states	8
Controllability rank	8 / 8
Observability rank	8 / 8
Controllability condition number	44.8
Observability condition number	33.9
RMSE after optimization	7.9088
MAE after optimization	6.2920
Coefficient of determination R^2	0.798
Relative output error	7.91%

Finally, the optimized model was checked for aliasing, confirming that the maximum pole frequency (0.05 Hz) remained below the Nyquist frequency (0.5 Hz), indicating no significant aliasing issues.

4.4 Transfer function

A nonlinear mimo system with two inputs and two outputs is modeled, whose dynamics have been learned by an LSTM network. Being defined in the discreet domain, the system is represented by four transfer functions $g_{ij}(z)$, which describe the causal relationships between each pair input-salida.

With which,

$$G(z) = \begin{bmatrix} G_{11}(z) & G_{12}(z) \\ G_{21}(z) & G_{22}(z) \end{bmatrix} \tag{15}$$

Each transfer function is obtained from:

$$G(z) = C(zI - A)^{-1}B + D \tag{16}$$

Being defined each of them as:

Transfer functions $G_{ij}(z)$ are defined as:

$$G_{ij}(z) = \frac{N_{ij}(z)}{\det(zI-A)}$$

Where $N_{ij}(z)$ is the numerator that depends on the weights of the network, and the denominator is the determinant of $zI - A$, the characteristic polynomial of the matrix A.

Individual transfer functions are:

$$G(z) = \begin{bmatrix} \dfrac{N_{11}(z)}{\det(zI-A)} & \dfrac{N_{12}(z)}{\det(zI-A)} \\ \dfrac{N_{21}(z)}{\det(zI-A)} & \dfrac{N_{22}(z)}{\det(zI-A)} \end{bmatrix}, \tag{17}$$

$$\begin{aligned} N_{11}(z) &= -0.242z^7 + 1.224z^6 - 2.541z^5 + 2.807z^4 \\ &\quad - 1.775z^3 + 0.635z^2 - 0.1156z + 0.007629 \\ N_{12}(z) &= -0.2936z^7 + 1.546z^6 - 3.379z^5 + 3.982z^4 \\ &\quad - 2.734z^3 + 1.092z^2 - 0.2335z + 0.02033 \\ N_{21}(z) &= 0.3493z^7 - 1.793z^6 + 3.804z^5 - 4.322z^4 \\ &\quad + 2.828z^3 - 1.055z^2 + 0.2026z - 0.01443 \\ N_{22}(z) &= -0.132z^7 + 0.7038z^6 - 1.513z^5 + 1.705z^4 \\ &\quad - 1.08z^3 + 0.3761z^2 - 0.06247z + 0.003011 \end{aligned} \tag{18}$$

$$\begin{aligned} \det(zI - A) &= z^8 - 4.729z^7 + 9.549z^6 - 10.73z^5 + 7.298z^4 \\ &\quad - 3.053z^3 + 0.7569z^2 - 0.09969z + 0.005275 \end{aligned} \tag{19}$$

4.5 Stability of the Linearized Model

After applying piecewise linearization to the LSTM model, a discrete-time state-space representation was obtained in the form:

$$x_{k+1} = A_{\text{avg}}x_k + B_{\text{avg}}u_k \tag{20}$$

To assess the *stability* of the system, the eigenvalues of the matrix A_{avg} were analyzed. In discrete-time systems, the asymptotic stability of the model depends solely on the location of these eigenvalues in the complex plane [3]. Specifically, the system is considered stable if all eigenvalues of A_{avg} lie strictly inside the unit circle, that is:

$$\max_i |\lambda_i(A_{\text{avg}})| < 1 \tag{21}$$

Since this analysis focuses on the homogeneous system (i.e., in the absence of inputs), the matrix B_{avg} is not required for the stability assessment. In this work, the eigenvalues were computed numerically and were all found to satisfy the above condition, confirming that the resulting model is stable.

It is important to note that although A_{avg} is sufficient for stability analysis, future control design tasks will require examining the *controllability* of the system, which depends on the pair $(A_{\text{avg}}, B_{\text{avg}})$.

Table 5: Stability measures of the linearized model

Measure	Value
System stability	Stable (all poles with magnitude < 1)
Type of stability	Asymptotic (poles inside the unit circle)
System poles	Complex and real eigenvalues with magnitude less than one
Dominant pole	$\lambda = 0.8537$ (largest real magnitude)
Settling time	$t_s = 25.28\,s$ associated with the dominant pole
Natural frequency	Between 0.1582 and 6.5044 rad/s depending on dominant poles
Damping ratio	Between 0.88 and 1.00, critical or lightly underdamped
Pole-zero cancellation	Undetermined without zero information

4.6 Conclusions

This work presented a systematic methodology for linearizing a trained LSTM network modeling a nonlinear 2×2 coupled-tank MIMO system. The proposed framework integrates **piecewise linearization**, **recalibrated Batch Normalization**, and **fully connected layers**, producing a **reduced-order discrete-time state-space model** that preserves the dominant dynamics of the original network.

Key findings include:

- **Predictive fidelity:** The optimized 8-state reduced-order model accurately reproduces the dominant dynamics of the original 300-state LSTM network, with RMSE ≈ 7.91 and $R^2 \approx 0.798$ for both outputs.
- **Stability:** Eigenvalue analysis confirms asymptotic stability of the linearized system, with all poles strictly inside the unit circle.
- **Control-oriented properties:** The model preserves controllability and observability, enabling derivation of discrete-time transfer functions and application of classical control and optimization techniques.
- **Computational efficiency:** The reduced-order model is compact, numerically robust, and suitable for real-time implementation, while retaining essential multivariable dynamics.

Overall, the study demonstrates that LSTM-based system identification can be transformed into a **mathematically tractable and control-compatible representation**, bridging the gap between nonlinear data-driven modeling and classical control theory.

4.7 Future Work

Potential extensions of this research include:

1. **Control design using the linearized model:** Apply advanced controllers (LQR, MPC, H∞, or robust MPC) for water-level regulation under constraints and disturbances.
2. **State estimation and fault diagnosis:** Develop observers (Kalman, EKF, UKF) using the reduced-order model for sensor/actuator fault detection and isolation.
3. **Hybrid or physics-informed architectures:** Incorporate physical constraints or conservation laws into the LSTM to enhance interpretability and extrapolation.
4. **Online learning and adaptive modeling:** Enable real-time parameter adaptation to compensate for system drift, aging actuators, or unmodeled dynamics.
5. **Comparison with modern time-series models:** Evaluate whether Transformer-based or Structured State Space (S4, DSS) models can outperform LSTM in MIMO system identification.
6. **Application to operational control:** Integrate the identified model into real-time flow control schemes considering safety, energy, and operational constraints.

References

[1] Hochreiter S, Schmidhuber J. Long Short-Term Memory. Neural Computation. 1997;9(8):1735-80.

[2] Greff K, Srivastava RK, Koutník J, Steunebrink BR, Schmidhuber J. LSTM: A search space odyssey. IEEE Transactions on Neural Networks and Learning Systems. 2017;28(10):2222-32.

[3] Bonassi F, Terzi E, Farina M, Scattolini R. LSTM Neural Networks: Input to State Stability and Probabilistic Safety Verification. In: Bayen AM, Jadbabaie A, Pappas G, Parrilo PA, Recht B, Tomlin C, et al., editors. Proceedings of the 2nd Conference on Learning for Dynamics and Control. vol. 120 of Proceedings of Machine Learning Research. PMLR; 2020. p. 85-94. Available from: https://proceedings.mlr.press/v120/bonassi20a.html.

[4] Qin SJ, Li J. LSTM Neural Networks and Nonlinear State-Space Model Identification. In: Proceedings of the 2022 AIChE Annual Meeting. AIChE; 2022. Paper 432c, Computing and Systems Technology Division, Advances in Machine Learning and Intelligent Systems I.

[5] Ogata K. Discrete-Time Control Systems. 5th ed. Pearson; 2010.

[6] Ljung L. System Identification: Theory for the User. Prentice Hall; 1985.

[7] Johansson MKJ. Piecewise Linear Control Systems: A Computational Approach. vol. 284 of Lecture Notes in Control and Information Sciences. Springer; 2003. .

[8] Ioffe S, Szegedy C. Batch Normalization: Accelerating Deep Network Training by Reducing Internal Covariate Shift. In: Proceedings of the 32nd International Conference on Machine Learning. PMLR; 2015. p. 448-56.