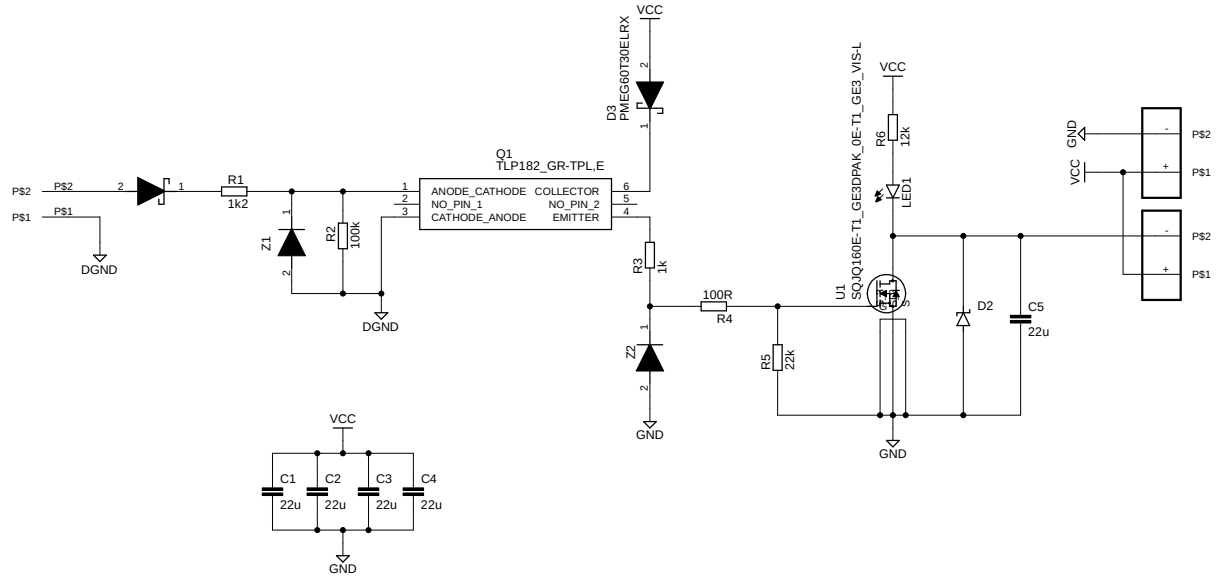

3DPrinter_MOSFET_Tiny v29	
TITLE:	
Document Number:	REV:
Date: not saved!	Sheet: 1/1

24.05.2024 19:45 f=0.67 (Sheet: 1/1)