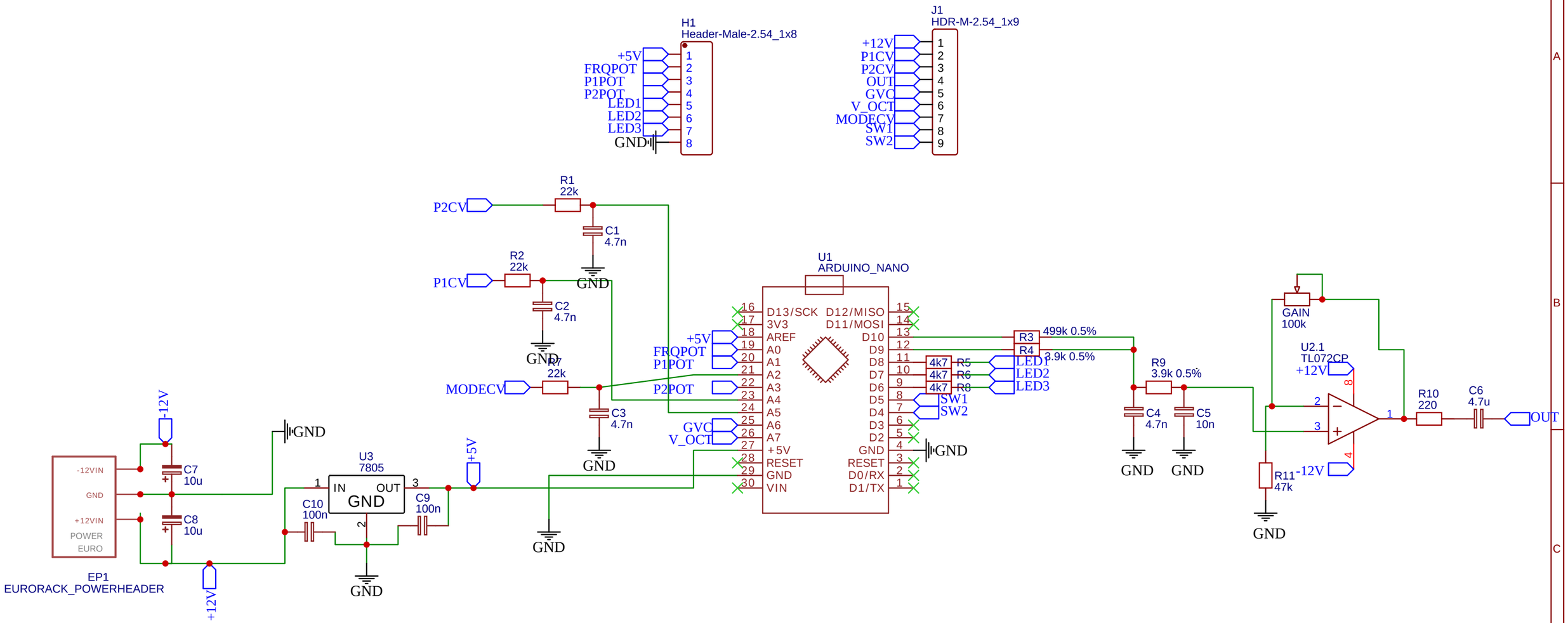


| | |
|---|---|
| TITLE: HAGIWO oscillator main circuit | REV: 1.1 |
| EasyEDA | Company: - |
| | Sheet: 1/1 |
| | Date: 2021-01-24 Drawn By: testbild |

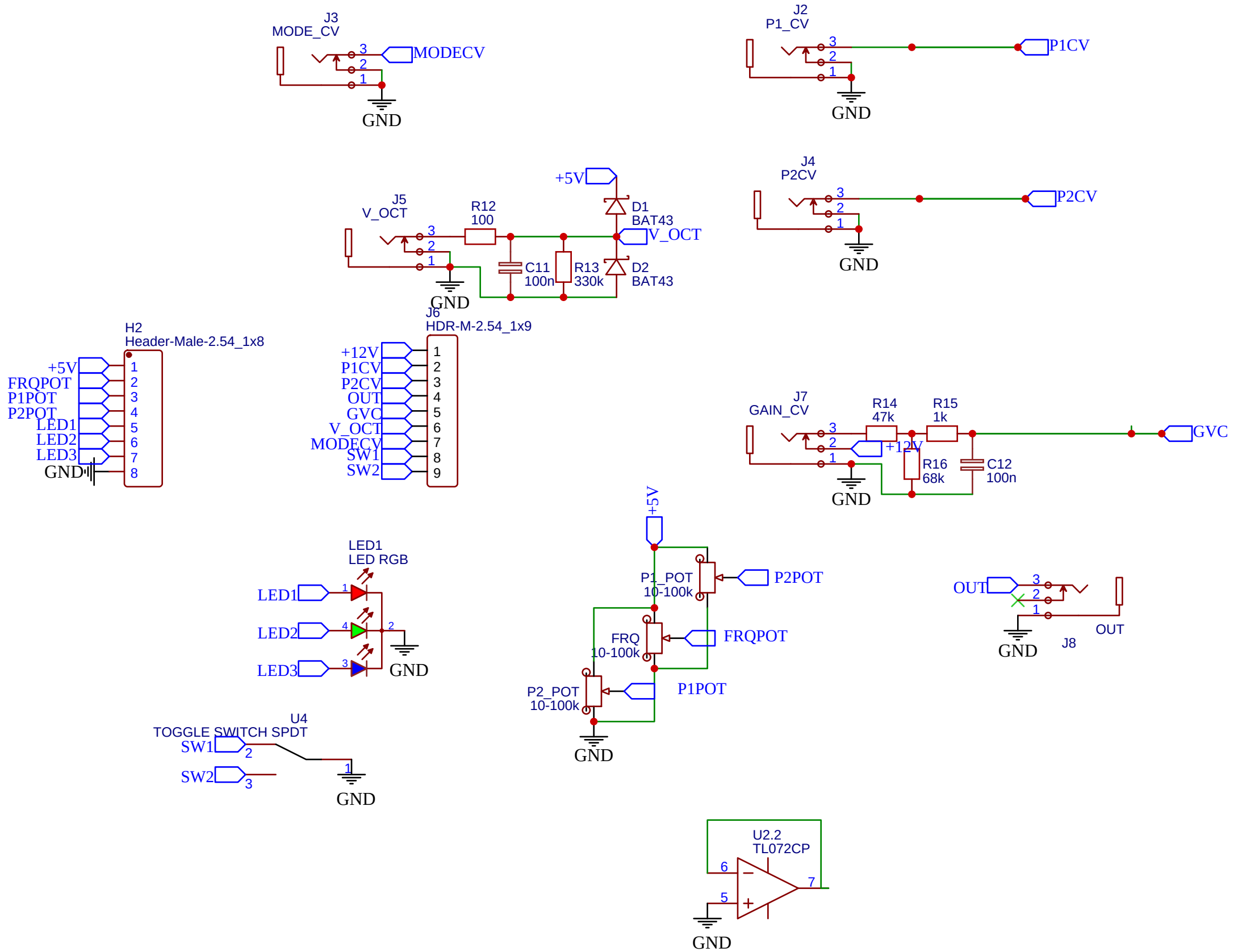


| | |
|---|---|
| TITLE: HAGIWO oscillator control circuit | REV: 1.1 |
| EasyEDA | Company: Your Company / Sheet: 1/1 |
| | Date: 2021-01-24 Drawn By: testbild |