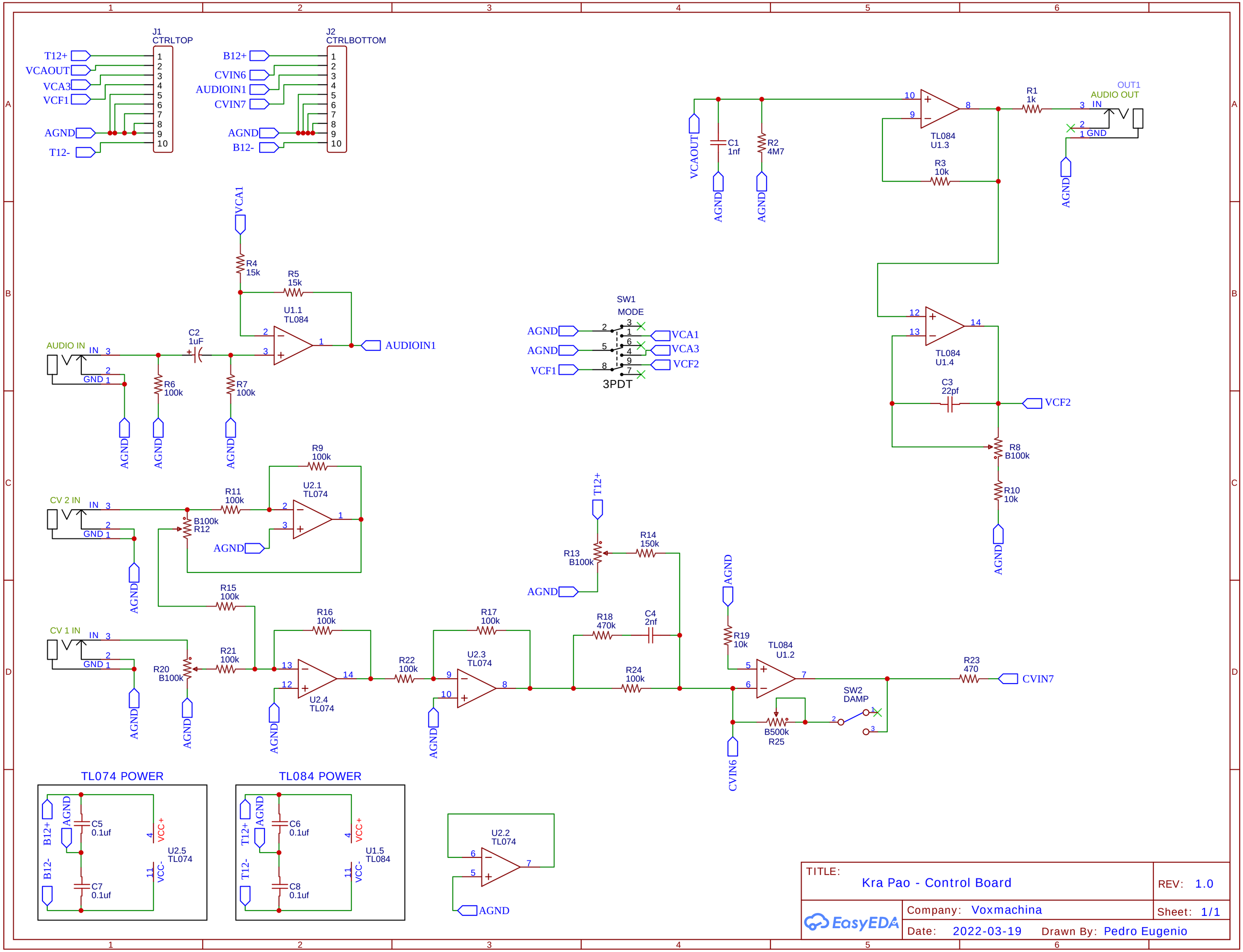
J1
CTRLTOP
T12+
VCAOUT
VCA3
VCF1
AGND
T12-
J2
CTRLBOTTOM
B12+
CVIN6
AUDIOIN1
CVIN7
AGND
B12-
VCAOUT
C1
1nf
R2
4M7
TL084
U1.3
R1
1k
OUT1
AUDIO OUT
IN
GND
R3
10k
VCA1
R4
15k
R5
15k
U1.1
TL084
AUDIO IN
C2
1uF
R6
100k
R7
100k
AUDIOIN1
SW1
MODE
VCA1
VCA3
VCF2
3PDT
TL084
U1.4
C3
22pf
VCF2
R8
B100k
R10
10k
CV 2 IN
R9
100k
U2.1
TL074
R11
100k
B100k
R12
T12+
R13
B100k
R14
150k
R15
100k
CV 1 IN
R16
100k
R17
100k
R18
470k
C4
2nf
R19
10k
TL084
U1.2
R20
B100k
R21
100k
U2.4
TL074
R22
100k
U2.3
TL074
R24
100k
R23
470
CVIN7
SW2
DAMP
B500k
R25
CVIN6
TL074 POWER
B12+
B12-
C5
0.1uf
C7
0.1uf
VCC+
VCC-
U2.5
TL074
TL084 POWER
T12+
T12-
C6
0.1uf
C8
0.1uf
U1.5
TL084
U2.2
TL074
TITLE:
Kra Pao - Control Board
REV: 1.0
Company: Voxmachina
Sheet: 1/1
Date: 2022-03-19
Drawn By: Pedro Eugenio
EasyEDA