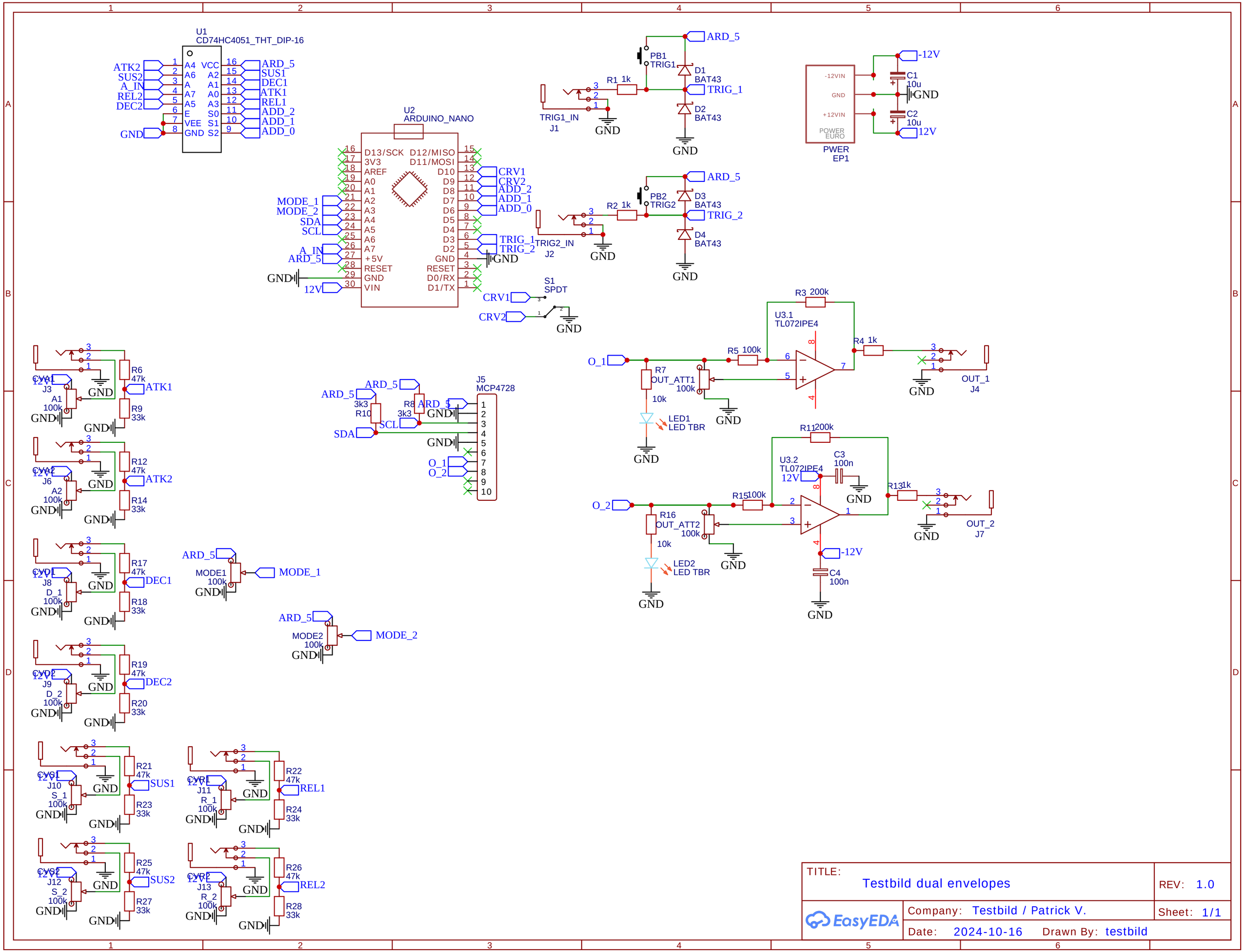

TITLE: Testbild dual envelopes	REV: 1.0
EasyEDA — Company: Testbild / Patrick V.	Sheet: 1/1
Date: 2024-10-16 Drawn By: testbild	