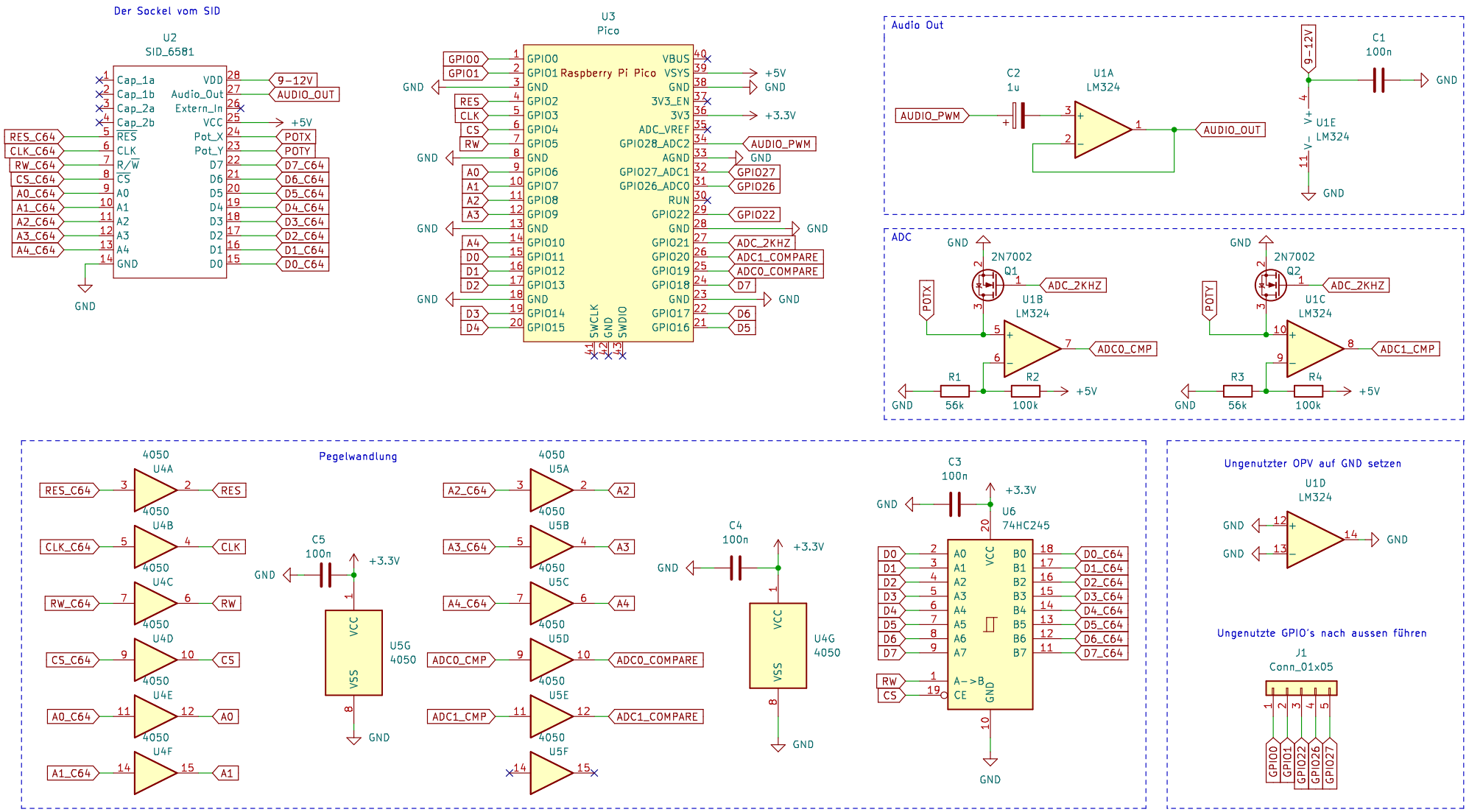

Thorsten Kattanek

Sheet: /

File: the_pico_sid.kicad_sch

Title: ThePicoSID

Size: A4	Date: 2024-01-25	**Rev: 1.4**
KiCad E.D.A. kicad 6.0.11-2627ca5db0~126~ubuntu22.04.1		Id: 1/1