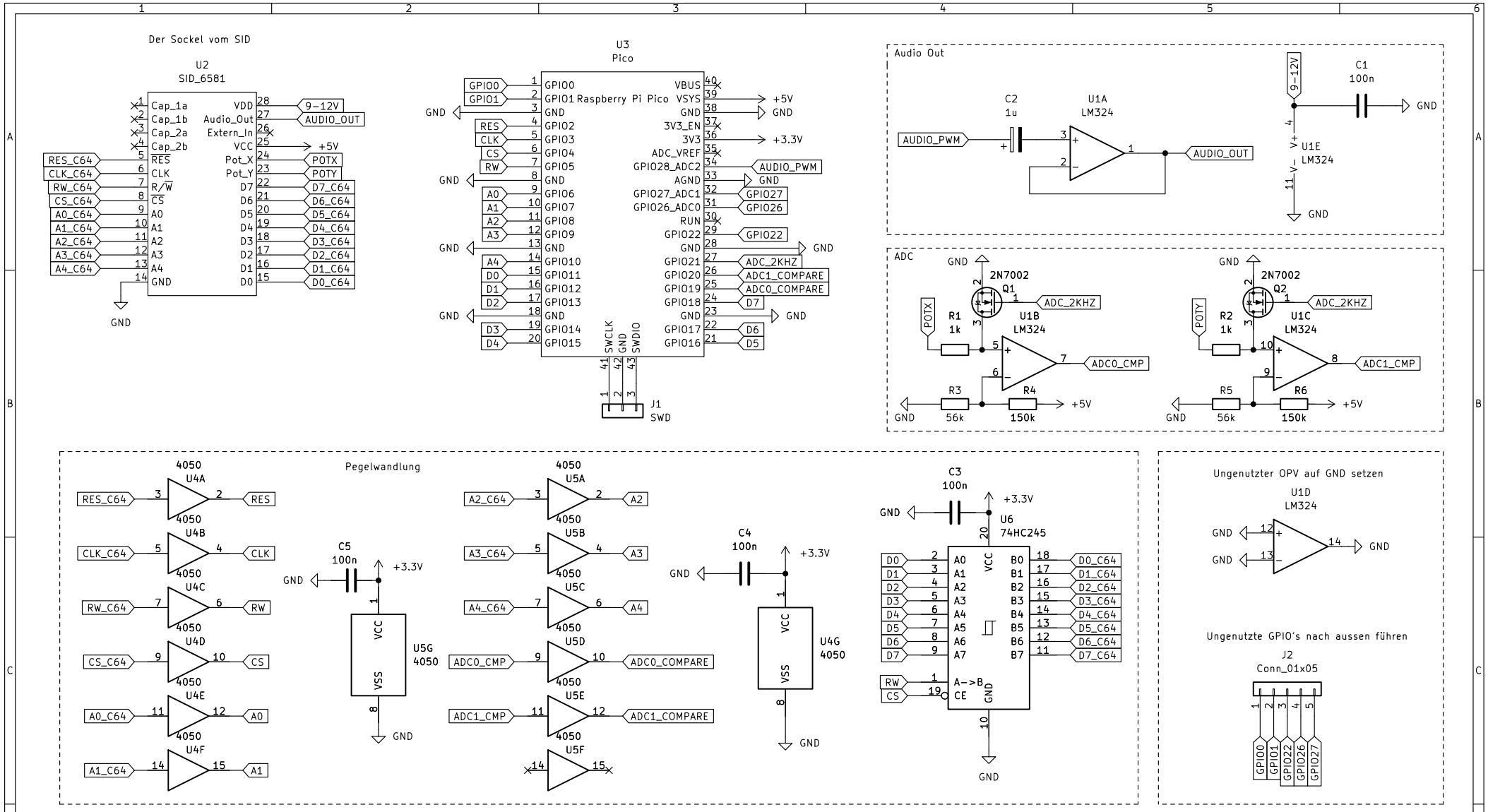

Thorsten Kattanek

Sheet: /

File: the_pico_sid.kicad_sch

Title: ThePicoSID

Size: A4	Date: 2023-10-08	**Rev: 1.3**
KiCad E.D.A. kicad 6.0.11-2627ca5db0~126~ubuntu22.04.1		Id: 1/1