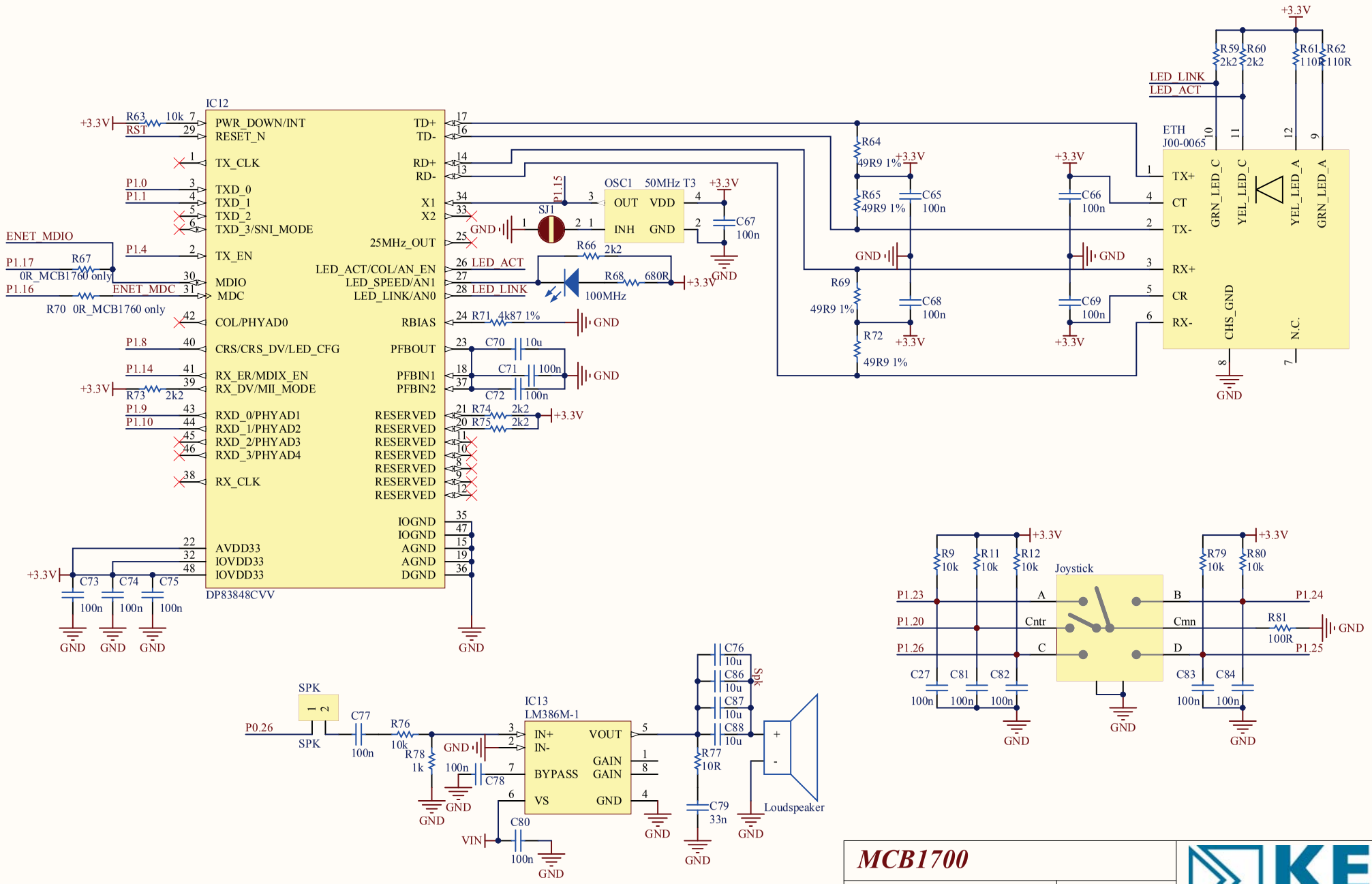

MCB1700

Ethernet_Spk.SchDoc	Revision: 1.2
Size: A4	Sheet 6 of 6
Date: 29.7.2009	Web: www.keil.com/MCB1700

KEIL™ An ARM® Company