Team No.: 6 Names: Thaddeus Harris & Elizabeth Squires

Submission 6 – Final Report – Rubric/Checklist & Grade Sheet

Item (potential points shown next to content)	Score		Additional Comments
CONTENT	**Peer**	**Prof**	
Complete document, includes revisions to prior submissions (Introduction, Literature Review, Experimental Design, Methods & Theory, Analysis & Results, Conclusions & Recommendations) (yes(2)/no(0))	0		
Includes an abstract that presents a clear overview and concise summary of project and results (yes(2)/no(0))	1		
Written in prose that is connected and flows (e.g., not a series of disconnected paragraphs) (yes(2)/no(0))	2		
WRITING			
Each paragraph has a topic sentence (yes(2)/no(0))	2		
Each sentence after the topic sentence (1 & 2 below):			
(1) Relates to the topic sentence (yes(2)/no(0))	2		
(2) Is well-written (yes(2)/no(0))	2		
Sentences are complete (yes(2)/no(0))	2		
No spelling errors (yes(1)/no(0))	1		
No typographical errors (yes(1)/no(0))	1		
The text effectively communicates ideas and information to both an expert and non-expert audience (yes(1)/no(0))	1		
Writing effectively transitions between ideas/topics (yes(1)/no(0))	1		**The whole report should be in this submission not just the abstract**
FORMATTING			
Margins are 1” and text is double spaced (yes(1)/no(0))	0		
Title page & page numbers included (yes(1)/no(0))	1		**This wasn’t Double spaced**
Fonts and text justification are consistent; formatting of paragraphs and section headings/subheadings is consistent throughout the document (yes(1)/no(0))	1		
References are appropriately used and cited in-text when used; references list included at the end of the body of the submission in the correct format (yes(1)/no(0))	1		
Table of contents included for report sections, Figures and Tables (separate, each on its own pg) (yes(1)/no(0))	0		
Complete references list in proper format that includes all cited sources; all sources listed in the references must be cited in report with an in-text citation (yes(1)/no(0))	1		
Appropriate figures included (1 AutoCAD figure, 1 experimental setup, 2 experimental plots, 1 comparison figure) (yes(1)/no(0))	0		
Figures and Tables are explained in the text, referenced in the text, and have appropriately placed descriptive titles (yes(1)/no(0))	0		
All aspects of the report formatted for clarity in black and white printing (e.g., patterns, line types, symbols – not just colors) (yes(1)/no(0))	1		
Appendices are included for raw data and additional plots, calculations, and data reduction. Appendices referenced in the text where applicable (e.g., direct the reader to the appendix where report content is related to the appendix) (yes(1)/no(0))	0		
Abstract included, sufficient Word Count (200 - 400 words) (yes(1)/no(0))	1		
Sufficient Word Count for Complete Report (2,200 - 3,800 words) (yes(1)/no(0))	0		
TOTAL	**22/30**	/30	

Grading rubric not included or submission directions not followed results in a grade of 0.

Measuring Effects of Different Galvanic Anodes on the Corrosion of Steel

Elizabeth Squires, Thaddeus Harris

Department of Civil and Environmental Engineering, Northeastern University

CIVE 2260: Materials for the Built Environment

Craig M. Shillaber

Abstract

This study investigates the different materials for galvanic anodes - magnesium, aluminum, and zinc – and how effective they are at preventing the corrosion of steel in harsh marine environments. Galvanic anodes are commonly used to protect steel structures, like ships and bridges, from corroding due to exposure to saltwater. The experiment measured the change in mass of the galvanic anodes after a week of exposure in a controlled saltwater concentration, as well as analyzing the mechanical properties of the steel through a three-point bending test. As expected, magnesium corroded the fastest because of its high oxidation potential, while aluminum was predicted to offer an optimal balance between protection and a long lifespan. The initial results confirmed that magnesium lost the most mass, zinc exhibited a more moderate rate of corrosion and showed consistent protection, while aluminum had the lowest corrosion rate, offering long-term durability. Stress-strain testing revealed minimal differences in the mechanical properties of the steel samples, suggesting that the short-term exposure did not significantly affect the steel's structural integrity. This research provides valuable insights into the balance between corrosion protection and the durability and life span of galvanic anode materials. Future research into alloy combinations, such as aluminum-zinc-magnesium, could further improve anode performance in harsh marine environments.

Introduction

Steel is a common material used in the construction of boats, bridges, offshore wind turbines, and other structures in the marine environment. Although steel's strength and durability make it an almost ideal material to use for these structures, contact with salt water can cause the steel to corrode. Corrosion can have negative impacts on the structural integrity of steel, resulting in potential failure to support a load, resulting in higher maintenance and repair costs. Corrosion can be extremely dangerous to repair, due to it's lack of strength.

Corrosion is caused by a process called oxidation, which can occur when metals like steel are exposed to water. When steel is exposed to moisture and water, the metal begins to corrode and rust. One method of combating this issue in marine structures is called a galvanic anode, where a metal component with a higher oxidation potential than steel, is attached to a steel structure. The anode will then undergo galvanic corrosion and protect the steel from oxidization. The question is: What material is the best at protecting steel from corrosion?

Multiple factors should be considered when deciding what material to use for galvanic corrosion, one of which being oxidation potential. A material's oxidation potential is defined as the tendency for the material to oxidize, or rust. The greater the difference is between the oxidation potential of steel and an anode, the more effective the anode will be in preventing corrosion. Magnesium has a high oxidation potential; however, it tends to corrode quickly, making it less ideal to use in a long-term projects. Aluminum and zinc have lower oxidation potentials and therefore lower effectiveness, but these materials tend to corrode less quickly. Although a higher oxidation potential is better for protection of the steel, quickly corroding anodes must be replaced more frequently, resulting in higher repair and maintenance costs.

To decide which material should be used for an anode, other contributors like cost, sustainability, and availability must be considered. Choosing materials that are abundant and can

produce many anodes for large projects is ideal, along with low production costs and less concern about environmental pollution from the anode's interaction with the local environment as it dissolves. Another thing to consider is finding balance between the level of protection it provides, and its lifespan is important when it comes to designing structures in the real world.

The expected result for this experiment is that the corrosion rate of steel will decrease with higher anode oxidation potential, while the amount of corrosion of the anode increases as its oxidation potential increases.

We have decided to test 3 metals as anodes: magnesium, zinc, and aluminum. These metals are some of the most common metals used as anodes in construction for the marine environment because of their strength and toughness. The hypothesis is aluminum will be the best material used for an anode because it has a higher oxidation potential compared to zinc but doesn't corrode quite as quick as magnesium

Experimental Design

The procedure for testing each sacrificial anode is as follows. Each sacrificial anode being tested is a 5/8’’ diameter 4’’ long sample. Each tested sacrificial anode is weighed before the experiment starts, and this data is recorded. Each sacrificial anode will be attached to the steel samples with water activated tape, so as to not limit the surface area contact between the sacrificial anodes and steel samples. Each steel sample is a 1/8’’ thick steel bar with a width of ½’’ and a length of 2’’. The steel meets the ASTM A36 standard. The samples will be placed in a McMaster-Carr Style A Plastic Tote Box, which is 16’’ long, 10 ¾’’ external width, 8 ¼’’ internal width, 7’’ tall and made of polyethylene plastic. Two gallons of distilled water and 1.25lbs of salt will be added to achieve a salinity of 70 grams of salt dissolved in solution per kilogram of water at room temperature. Three of the steel anodes will have an attached galvanic anode, with each of these three having a different attached metal. Two other samples will have no attached galvanic anode, but will have a portion of surface area covered by water activated tape where tape and the galvanic anode are on the three samples with galvanic anodes. One of the samples without the galvanic anode and the three samples with sacrificial anodes will be placed in the saltwater solution, with the fifth sample not being exposed to moisture outside of the any moisture present in the air. After a period of 2 weeks in the salt solution, the samples are to be removed from the salt water solution and dried. Each steel sample should be marked as: “magnesium”, “aluminum”, “zinc”, no “protection”, and “control” with regard to the testing conditions for each sample. After the samples are marked the sacrificial anodes and tape are to be removed. Each sacrificial anode is weighed and the new weight is recorded. Each steel sample should be tested with a 3 point bending test, a quarter inch of the sample should rest after the support point of each side of the testing device, and the load should be applied directly to the center of the sample. The stress strain graph should be recorded for analysis later. A photo of the steel samples should be taken before and after the test to observe any visual differences.

The expected results are that the magnesium will lose the greatest amount of weight, followed by zinc with aluminum losing the least amount of weight. These results are expected as magnesium has the highest reduction potential of the three metals, meaning it will reduce due to oxidation at a higher rate than the other metals. The untreated steel is expected to fail the soonest in the 3 point bending test, with the three treated samples having an undetectable difference in strength from each other and the control sample. This is expected as there would not be enough time for the differences of the sacrificial anodes to cause significant differences in the strength of the steel.

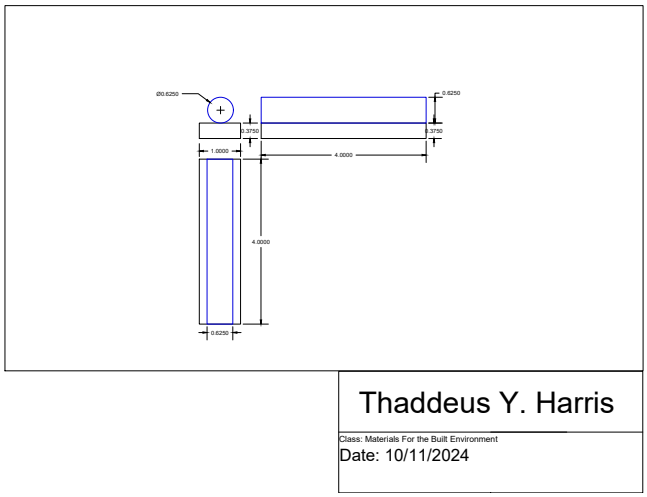

Figure 1: Test Sample

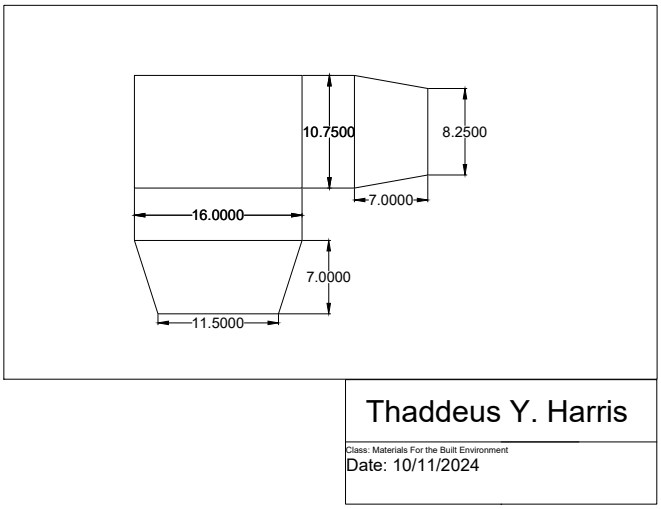

Figure 2: Test Apparatus

Literature Review

The study “Effect of Mg Content on the Performance of Al-Zn-Mg Sacrificial Anodes” discusses how adding magnesium to aluminum-zinc alloys impacts the performance as galvanic anodes (1). Magnesium has a higher oxidation potential so when added to aluminum, it prevents the oxidation layer on the surface of the aluminum. This characteristic makes magnesium more protective when in contact with steel. The results showed that increasing magnesium in the aluminum-zinc alloy increases the protective abilities of the anodes in corrosive saltwater environments. This finding is particularly relevant to marine environments where structures like boats and offshore wind farms are at risk of severe corrosion due to saltwater exposure. However, a significant drawback to higher magnesium content in the anode alloy is that the lifespan of the anode decreases, resulting in it needing to be replaced more often. This could be an issue for projects in marine environments that are difficult to provide frequent maintenance, even though the anodes are more protective. In addition, finding the balance between better protection and a longer lifespan of an anode is critical for real-life applications. Despite this limitation, the researchers concluded that aluminum- zinc- magnesium alloys are effective when it comes to saltwater environments and suggests that they could be worthy for short term applications where more effective protection is valued over longer lifespan and less frequent replacements of anodes. Building on these results, this experiment tests aluminum, zinc, and magnesium to determine the optimal material that balances protection and anode lifespan in marine environments. By analyzing the performance of these three materials as anodes, our study aims to further the past research and give more insight on improvement of continuous protection against steel corrosion in marine environments. Further research into improving the formulation of aluminum-zinc-magnesium alloys could lead to improvements in overall effectiveness of galvanic anodes.

The paper “Long-term Performance of Galvanic Anodes for the Protection of Steel Reinforced Concrete Structures” considers the performance of galvanic anodes over extended periods of time (2). The study evaluates the performance of zinc and other galvanic anodes in the protection of steel-reinforced concrete from saltwater corrosion. The researchers found that zinc anodes perform reliably over time, providing continued protection over time without need for frequent replacement. This reliability is due to zinc’s low oxidation potential, which results in a longer lifespan than other materials, like magnesium. However, while zinc anodes do not require frequent maintenance, the research highlights the importance of the correct installation practices and environmental conditions, because moisture content in concrete can affect the protectiveness of zinc anodes. The research also discusses varying lifespans of zinc anodes that undergo different conditions in marine environments. These results indicate that environments with higher chloride levels can lead to higher corrosive levels and increased corrosion rates. This results in less effective protection and shorter lifespans of zinc anodes.

Methods and Theory

The two main qualities being studied in this project are the change in mass of galvanic anodes and the stress-strain graph from a three point bending test for each of the samples. These stress strain relationships are then used to find the elastic strength, Young's modulus, and toughness of each sample. These material properties allow one to determine the suitability of the steel for applications like bridges where steel members are commonly used to take bending loads.

Multiple assumptions were made during the design of this study. The first assumption that was made was that galvanic corrosion could be accelerated by increasing the salinity of the water without compromising the test results by affecting the galvanic anodes in steel in an unintended manner. This assumption was made as none of the anodes' elements interact with water molecules, and the concentrations of the pieces removed from the anodes by corrosion would be relatively small in the water, presumably not effecting reaction significantly. Another assumption which was made was that the corrosion of the anodes in a stagnant pool of water would not effect the results as compared to a flowing body of water. The three point bending test was chosen under the assumption that it provides a reasonable analogue to the bending stresses that steel undergoes while reinforcing a concrete structure.

To find the change in mass the initial mass had the final mass subtracted from it. This was used to find the percent change in mass by dividing the change in mass by the initial mass and multiplying that number by 100%.

$$\frac{m_0 - m_t}{m_0} \times 100\% = \%\Delta m$$

Equation 1: Percent Change of Mass

The Young's modulus is found by sectioning off the initial linear part of each sample's stress strain graph, and finding the slope of this linear section. While there is a Young's modulus at all points on the stress strain graph, beyond the elastic linear section this number is difficult to calculate as there

is no easily obtainable function to find strain from stress. The relationship between stress (σ) and strain (ε) resulting in the initial modulus of elasticity (E) is:

$$E = \frac{\sigma}{\varepsilon}$$

Equation 2: Young's Modulus

The elastic strength is obtained by finding the amount of strain it takes until the stress-strain graph ceases to follow the initial Young's modulus, which indicates that the material will not return to its original length after the load has been removed. This is found visually from the stress strain graph where the linear section becomes non linear. Elastic strength has no general formula, as it is obtained from collected data, and is not exact, as there is no amount of stress where when it is removed the material will return to the exact initial state, with the elastic strength being qualitative to a degree.

The toughness is obtained by taking the area under the stress strain graph, and dividing it by the volume of the sample. Toughness has no standard equation, as the stress-strain function is not easily obtainable and therefore cannot be integrated to find the area, with the exception of the linear elastic area of the stress strain graph. In addition to this, none of the steel samples experienced fracture, so the elastic toughness is the only form of toughness obtained for this study. As the area under the curve for the linear elastic section of the graph is a triangle the area can be approximated as:

$$\frac{energy}{volume} = \frac{1}{2} \times \sigma\varepsilon$$

Equation 3: Toughness

Analysis and Results

This study has three sources of data. Firstly, the qualitative data taken of the samples before and after in the form of photos to observe any surface corrosion on each of the samples, and to observe loss of material and surface changes in each of the anodes. The second source of data is the weights of the anodes before and after the soaking period. The third and final source of data is the load-deformation data obtained from the three-point bending test on the ADMET machine.

Starting with the qualitative data, each sample experienced different levels of surface corrosion with the anodes experiencing either staining on exposed areas, surface corrosion, or spalling.

Figure 1: Photo of Zinc Anode (Right) and Associated Steel Sample (Left)

Figure 2: Photo of Aluminum Anode (Left) with Associated Steel Sample (Right)

Figure 3: Photo of Magnesium Anode with Associated Steel Sample (Right)

Each of the samples and anodes showed a different pattern of corrosion. The zinc anode was stained in multiple areas, though there was no visually noticeable loss of mass from the start of the experiment. The steel attached to the zinc experienced similar staining with a slightly different

coloration to the anode. The aluminum anode experienced staining where it was in contact with the water (not covered by tape), with the associated sample experiencing relatively even discoloration across the surface, with some streaks of green discoloration at the surface. The magnesium anode experienced the most corrosion out of the three, exhibiting some spalling behavior. The sample experienced some discoloration and roughness where it contacted the magnesium anode.

The weight changes for each of the galvanic anodes are varied by sample, with the initial weight being at an air dry state, and the 1-week weight being the weight of the anodes after drying with a paper towel .

Weights (g)	Zinc	Aluminum	Magnesium
Initial	134.8	34.6	39.4
1 Week	134.7	34.6	34
% Change	0.0742	0	13.7056

Table 1: Weight Changes in Galvanic Anodes

The magnesium experienced the largest change in weight over the one week period with the aluminum anode experiencing no change and the zinc anode experiencing a 0.1 gram decrease in weight, though when considering additional moisture the metal may have taken on in pores on the sample this decrease may be more than was observed in this testing (Table 1). The same is true of the aluminum sample. This is a flaw with the methodology and if this study was to be repeated the samples would be left in the air for a period of time to reduce the amount of water in the samples to an air dry state was also recorded.

The stress-strain relationships for each of the steel samples, as labeled by the anode they were attached to, or labeled as control in the case of the control sample.

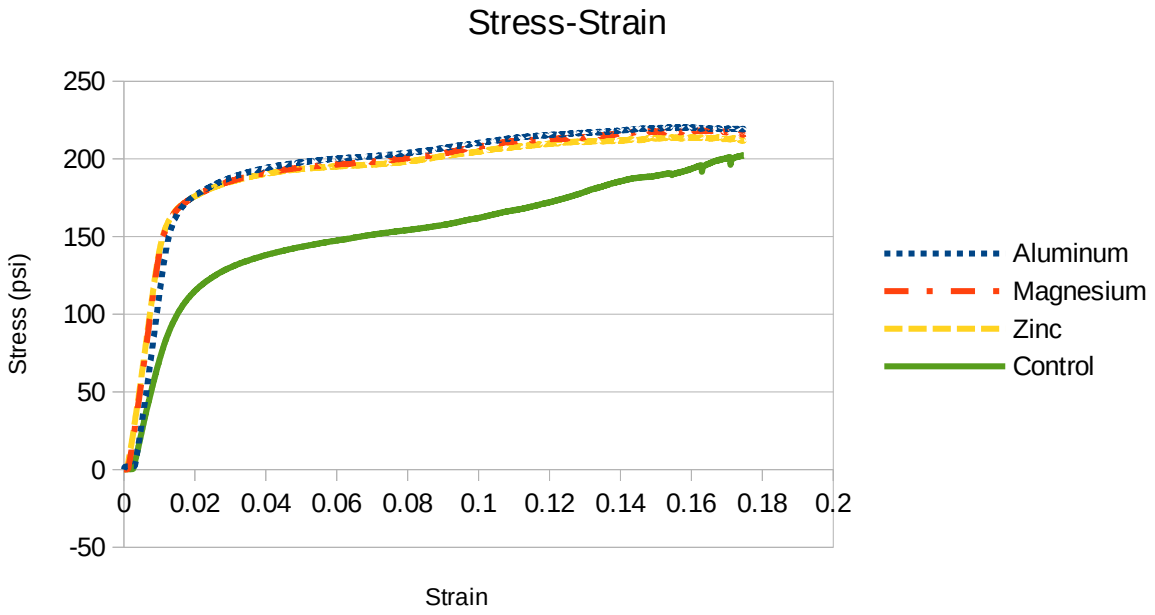

Figure 1: Stress-Strain Graph of All Samples

Each of the samples attached to a galvanic anode performed about the same, with the sample performing worse initially, having a significantly smaller elastic strength than the treated samples, though any tangent modulus taken after the elastic limit would be larger for the control than it is for the treated samples at the same point on the strain axis (Figure 1). Due to this the stress needed to deform the material approached that of the treated samples as the test progressed. None of the samples experienced fracture during testing, so no ultimate strength values could be observed, and the testing was halted after the steel section was no longer in contact with the top of the supports.

These results could provide evidence that the usage of a galvanic anode in saltwater increases the elastic strength of steel and increases the toughness. Alternatively, the difference from the control sample could be due to parameters of the ADMET machine being changed between the time when the control sample was tested and when the treated samples were tested, such as an altered rate of

displacement. It was assumed that those parameters would not be alerted by another user between the time when both samples were tested, with the only parameter that was closely monitored being the distance between the supports on the three-point bending mechanism, at 6cm. This demonstrates a problem in the experimental design and in future testing all parameters of the ADMET machine that are capable of being changed should be specified in the experimental design.

Conclusion

This study aimed to determine the best material used to make galvanic anodes for protecting steel in marine environments, by examining the performance of magnesium, zinc, and aluminum anodes. Based on the results, zinc offered the highest protection for the steel with minimal visible corrosion and only a small decrease in mass. Magnesium, while providing strong immediate protection due to its high oxidation potential, corrodes extremely quickly, making it not practical for long-term applications. Aluminum showed no significant mass loss and demonstrated slower rates of corrosion, providing a longer lifespan but offering the least protection.

The data revealed that zinc was the most effective at preserving the steel's strength and resisting corrosion under the tested conditions. While the differences in strength between the materials were within the standard error expected from the study and were not statistically significant, magnesium initially offers similarly high protection to zinc, its rapid corrosion rate makes it less suitable for long-term applications. Aluminum, although slower to corrode than magnesium, was outperformed by zinc in terms of providing structural protection for the steel samples.

These findings challenge the hypothesis that magnesium would be the most effective anode. Instead, zinc provided the best overall protection, making it the preferred material for long-term marine applications. Magnesium, with its high corrosion rate, is more suited for short-term or easily accessible projects. Aluminum may still be an option for applications where moderate protection and a longer lifespan are needed, though it offers slightly less protection than zinc. Aluminum may also be the most cost efficient and recyclable option of the three materials.

Recommendations

Future research should test aluminum- zinc- magnesium alloys, for adjusting the composition of the metals could improve both the lifespan and protection. Additionally, conducting experiments in flowing water versus still water could better simulate real-life conditions and provide more accurate results. Testing different water temperatures and varying salinity levels could be valuable for determining the effectiveness of these anodes in a wider range of environments.

Improving the experimental design could involve extending the testing period beyond one week to observe more substantial changes in both the anodes and steel samples. Longer-term experiments would allow for a more accurate understanding of how the corrosion rate changes over time and how protective the anode materials are under sustained conditions. Future research could also consider including more samples of each material to allow for more accurate data.

References

[1] Orozco, R., et al. “Effect of Mg Content on the Performance of Al-Zn-Mg Sacrificial Anodes - Journal of Materials Engineering and Performance.” SpringerLink, Kluwer Academic Publishers-Plenum Publishers, 14 Apr. 2007, link.springer.com/article/10.1007/s11665007-9037-z.

[2] Kamde, Deepak K., et al. “Long-Term Performance of Galvanic Anodes for the Protection of Steel Reinforced Concrete Structures.” Web of Science, Oct. 2021, www.webofscience.com/wos/woscc/full-record/WOS:000689334600003.