Team No.: 6 Names: Thaddeus Harris, Betsy Squires

Submission 3 – Experimental Design – Rubric/Checklist & Grade Sheet

Item (potential points shown next to content)	Score		Comments
CONTENT	Peer	Prof	**Include a title page**
Detailed experimental description of the test specimens, testing apparatus and testing procedure is provided (yes(2)/no(0))	2		**Further explain reasoning for expecting magnesium to lose the most weight in the second paragraph.**
Experiment includes sufficient trials and/or specimens for meaningful results & conclusions (yes(2)/no(0))	2		
Figures appropriately included (explanation first, then reference to figure to illustrate and reinforce what the text says) (yes(2)/no(0))	2		**Be more specific when talking about how to conduct the 3-point bending test.**
Figures have appropriately placed, descriptive titles – that are self-explanatory and not redundant (yes(2)/no(0))	2		
Written in prose that is connected and flows (i.e., not a series of bullet point steps) (yes(2)/no(0))	2		**Explain undetectable difference in strength further.**
WRITING			
Each paragraph has a topic sentence (yes(2)/no(0))	2		**Add "to" in the second sentence: The untreated steel is expected to fail…**
Each sentence after the topic sentence (1 & 2 below):			
(1) Relates to the topic sentence(yes(2)/no(0))	2		
(2) Is well-written (yes(2)/no(0))	2		
Sentences are complete (yes(2)/no(0))	2		
No spelling errors (yes(1)/no(0))	1		
No typographical errors (yes(1)/no(0))	0		
The text effectively communicates ideas and information to both an expert and non-expert audience (yes(1)/no(0))	1		
Writing effectively transitions between ideas/topics (yes(1)/no(0))	1		
FORMATTING			
Margins are 1" and text is double spaced (yes(1)/no(0))	1		
Title page & page numbers included (yes(1)/no(0))	0		
Fonts and text justification are consistent; formatting of paragraphs and section headings/subheadings is consistent throughout the document (yes(1)/no(0))	1		
References are appropriately used and cited in-text when used; references list included at the end of the body of the submission in the correct format (i.e., complete reference information for external sources) (yes(1)/no(0))	1		
Correct word count (400-600 words) (yes(1)/no(0))	1		
TOTAL	**25 /27**	**/27**	

Measuring Effects of Different Galvanic Anodes on the Corrosion of Steel

Grading rubric not included or submission directions not followed results in a grade of 0.

Elizabeth Squires, Thaddeus Harris

Department of Civil and Environmental Engineering, Northeastern University

CIVE 2260: Materials for the Built Environment

Craig M. Shillaber

Experimental Design

The procedure for testing each sacrificial anode is as follows. Each sacrificial anode being tested is a 5/8’’ diameter 4’’ long sample. Each tested sacrificial anode is weighed before the experiment starts, and this data is recorded. Each sacrificial anode will be attached to the steel samples with water activated tape, so as to not limit the surface area contact between the sacrificial anodes and steel samples. Each steel sample is a 1/8’’ thick steel bar with a width of ½’’ and a length of 2’’. The steel meets the ASTM A36 standard. The samples will be placed in a McMaster-Carr Style A Plastic Tote Box, which is 16’’ long, 10 ¾’’ external width, 8 ¼’’ internal width, 7’’ tall and made of polyethylene plastic. Two gallons of distilled water and 1.25lbs of salt will be added to achieve a salinity of 70 grams of salt dissolved in solution per kilogram of water at room temperature. Three of the steel anodes will have an attached galvanic anode, with each of these three having a different attached metal. Two other samples will have no attached galvanic anode, but will have a portion of surface area covered by water activated tape where tape and the galvanic anode are on the three samples with galvanic anodes. One of the samples without the galvanic anode and the three samples with sacrificial anodes will be placed in the saltwater solution, with the fifth sample not being exposed to moisture outside of the any moisture present in the air. After a period of 2 weeks in the salt solution, the samples are to be removed from the salt water solution and dried. Each steel sample should be marked as: “magnesium”, “aluminum”, “zinc”, no “protection”, and “control” with regard to the testing conditions for each sample. After the samples are marked the sacrificial anodes and tape are to be removed. Each sacrificial anode is weighed and the new weight is recorded. Each steel sample should be tested with a 3 point bending test, a quarter inch of the sample should rest after the support point of each side of the testing device, and the load should be applied directly to the ceneter of the sample. The stress strain graph should be recorded for analysis later. A photo of the steel samples should be taken before and after the test to observe any visual differences.

The expected results are that the magnesium will lose the greatest amount of weight, followed by zinc with aluminum losing the least amount of weight. These results are expected as magnesium has the highest reduction potential of the three metals, meaning it will reduce due to oxidation at a higher rate than the other metals. The untreated steel is expected to fail the soonest in the 3 point bending test, with the three treated samples having an undetectable difference in strength from each other and the control sample. This is expected as there would not be enough time for the differences of the sacrifical anodes to cause significant differences in the strength of the steel.

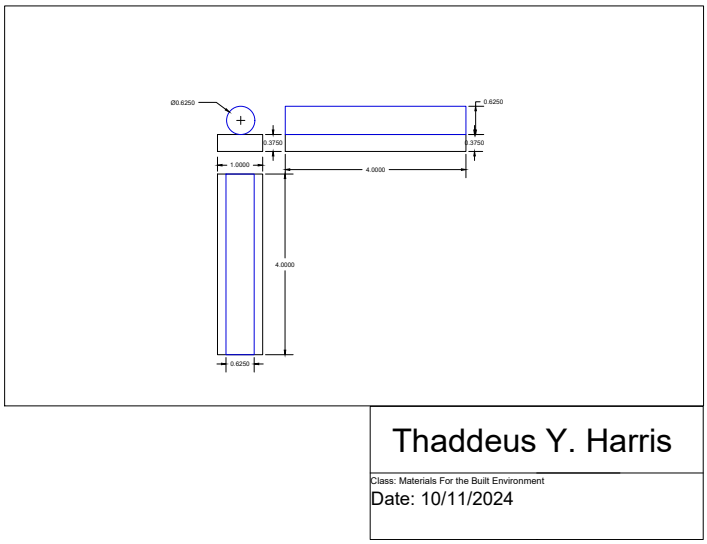

Figure 1: Test Sample

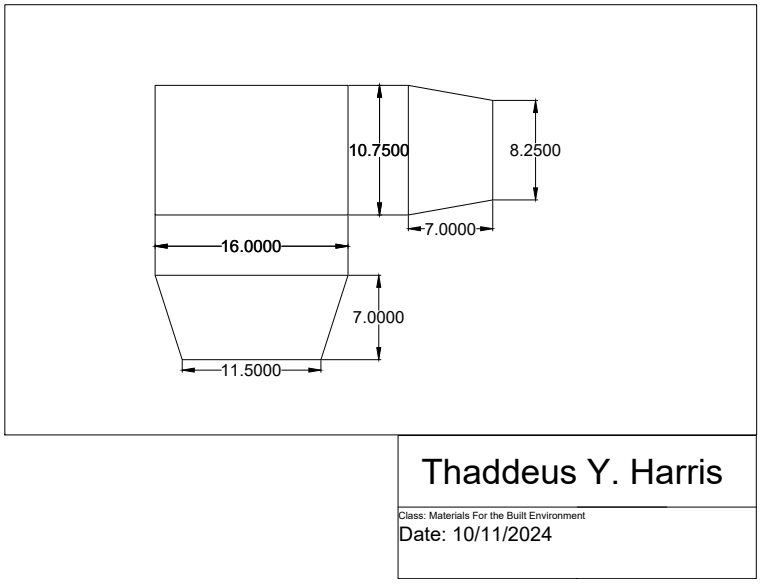

Figure 2: Test Apparatus