Team No.: _____ Names: _____

Submission 4 – Methods and Theory – Rubric/Checklist & Grade Sheet

Item (potential points shown next to content)	Score		Comments
CONTENT	Peer	Prof	- **Missing clear assumptions** - **Equations mentioned but not explained thoroughly.** - **Calculations section should be expanded.** - **Lack clear topic sentences** - **Change "it's" to "its" in section about elastic strength.** - **No page numbers.** - **Word count is not within range.**
Explains assumptions made that impacted data and results (yes(2)/no(0))	0		
Includes and thoroughly explains equations used in reducing the data and producing the results (yes(2)/no(0))	0		
Variables and parameters associated with experiment are provided and properly defined (yes(2)/no(0))	2		
Any necessary pre-experiment calculations (e.g., cross-sectional area, moment of inertia) are summarized in the report and included in the appendix (yes(2)/no(0))	2		
Connects past work and theory (literature review) to the data processing performed to draw logical conclusions (i.e., write this in the context of your prior and upcoming sections, as a continuation of a single coherent document) (yes(2)/no(0))	2		
Written in prose that is connected and flows (i.e., not a series of bullet point steps) (yes(2)/no(0))	2		
WRITING			
Each paragraph has a topic sentence (yes(2)/no(0))	0		
Each sentence after the topic sentence (1 & 2 below):			
(1) Relates to the topic sentence (yes(2)/no(0))	2		
(2) Is well-written (yes(2)/no(0))	2		
Sentences are complete (yes(2)/no(0))	2		
No spelling errors (yes(1)/no(0))	2		
No typographical errors (yes(1)/no(0))	0		
The text effectively communicates ideas and information to both an expert and non-expert audience (yes(1)/no(0))	1		
Writing effectively transitions between ideas/topics (yes(1)/no(0))	1		
FORMATTING			
Margins are 1" and text is double spaced (yes(1)/no(0))	1		
Title page & page numbers included (yes(1)/no(0))	0		
Fonts and text justification are consistent; formatting of paragraphs and section headings/subheadings is consistent throughout the document (yes(1)/no(0))	1		
References are appropriately used and cited in-text when used; references list included at the end of the body of the submission in the correct format (i.e., complete reference information for external sources) (yes(1)/no(0))	1		
Correct word count (400-600 words) (yes(1)/no(0))	0		
TOTAL	**21/29**	**/29**	

Measuring Effects of Different Galvanic Anodes on the Corrosion of Steel

Elizabeth Squires, Thaddeus Harris

Department of Civil and Environmental Engineering, Northeastern University

CIVE 2260: Materials for the Built Environment

Craig M. Shillaber

Methods and Theory

The two main qualities being studied in this project are the change in mass of galvanic anodes and the stress-strain graph from a three point bending test for each of the samples. These stress strain graphs are then used to find the elastic strength, Young's modulus, and toughness of each sample.

Multiple assumptions were made during the design of this study. The first assumption that was made was that galvanic corrosion could be accelerated by increasing the salinity of the water without compromising the test results by affecting the galvanic anodes in steel in an unintended manner. Another assumption which was made was that the corrosion of the anodes in a stagnant pool of water would not effect the results as compared to a flowing body of water. The three point bending test was chosen under the assumption that it provides a reasonable analogue to the bending stresses that steel undergoes while reinforcing a concrete structure.

To find the change in mass the initial mass had the final mass subtracted from it. This was used to find the percent change in mass by dividing the change in mass by the initial mass and multiplying that number by 100%.

$$\frac{m_0 - m_t}{m_0} \times 100\% = \%\Delta m$$

The Young's modulus is found by sectioning off the initial linear part of each sample's stress strain graph, and finding the slope of this linear section. While there is a Young's modulus at all points on the stress strain graph, beyond the elastic linear section this number is difficult to calculate as there is no easily obtainable function to find strain from stress. The relationship between stress (σ) and strain (ε) resulting in the initial modulus of elasticity (E) is:

$$E = \frac{\sigma}{\varepsilon}$$

The elastic strength is obtained by finding the amount of strain it takes until the stress-strain graph ceases to follow the initial Young's modulus, which indicates that the material will not return to its original length after the load has been removed. This is found visually from the stress strain graph where the linear section becomes non linear. There is no formula for elastic strength, as it is obtained from collected data, and is not exact, as there is no amount of stress where when it is removed the material will return to the exact initial state, with the elastic strength being qualitative to a degree.

The toughness is obtained by taking the area under the stress strain graph, and dividing it by the volume of the sample. Toughness has no standard equation, as the stress-strain function is not easily obtainable and therefore cannot be integrated to find the area, with the exception of the linear elastic area of the stress strain graph. In addition to this, none of the steel samples experienced fracture, so the elastic toughness is the only form of toughness obtained for this study. As the area under the curve for the linear elastic section of the graph is a triangle the area can be approximated as:

$$\frac{energy}{volume} = \frac{1}{2} \times \sigma\varepsilon$$

Experimental Design

The procedure for testing each sacrificial anode is as follows. Each sacrificial anode being tested is a 5/8’’ diameter 4’’ long sample. Each tested sacrificial anode is weighed before the experiment starts, and this data is recorded. Each sacrificial anode will be attached to the steel samples with water activated tape, so as to not limit the surface area contact between the sacrificial anodes and steel samples. Each steel sample is a 1/8’’ thick steel bar with a width of ½’’ and a length of 4’’. The steel meets the ASTM A36 standard. The samples are to be placed in a rubber, glass, or plastic container to ensure that the saltwater does not react with the container. Two gallons of distilled water and 1.25lbs of salt will be added to achieve a salinity of 70 grams of salt dissolved in solution per kilogram of water at room temperature. Three of the steel anodes will have an attached galvanic anode, with each of these three having a different attached metal. The other sample will have no attached galvanic anode and will act as a control sample. After a period of one week in the salt solution, the samples are to be removed from the saltwater solution and dried. Each steel sample should be marked as: “magnesium”, “aluminum”, “zinc”, and “control” with regard to the testing conditions for each sample. After the samples are marked the sacrificial anodes and tape are to be removed. Each sacrificial anode is weighed and the new weight is recorded. Photos should be taken of each sample and anode to note qualitative differences between the samples. Each steel sample should be tested with a 3 point bending test, a quarter inch of the sample should rest after the support point of each side of the testing device, and the load should be applied directly to the center of the sample. The stress strain graph should be recorded for analysis later. A photo of the steel samples should be taken before and after the test to observe any visual differences.

The expected results are that the magnesium will lose the greatest amount of weight, followed by zinc with aluminum losing the least amount of weight. These results are expected as magnesium has the highest reduction potential of the three metals, meaning it will reduce due to oxidation at a higher

rate than the other metals. The three treated samples are expected to have a small or undetectable difference in strength from each other , and it is expected they will not have a stress strain curve much different than the control sample. This is expected as there would not be enough time for the differences of the sacrificial anodes to cause significant differences in the strength of the steel, even if surface corrosion is visible in different rates.

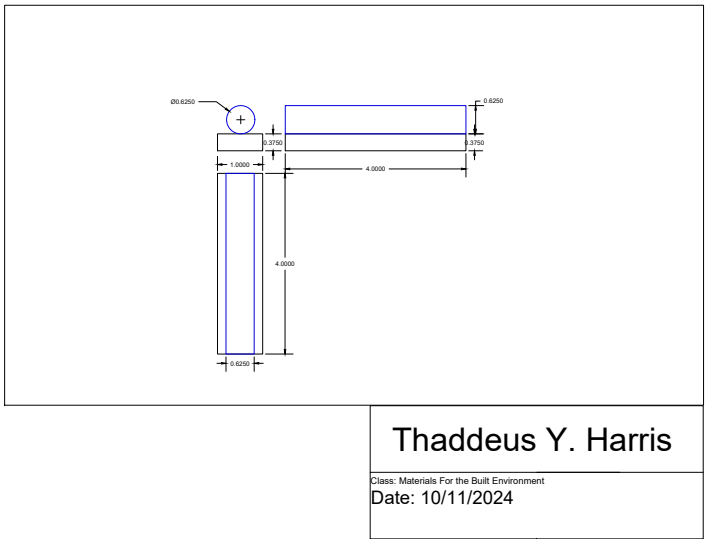

Figure 1: Test Sample

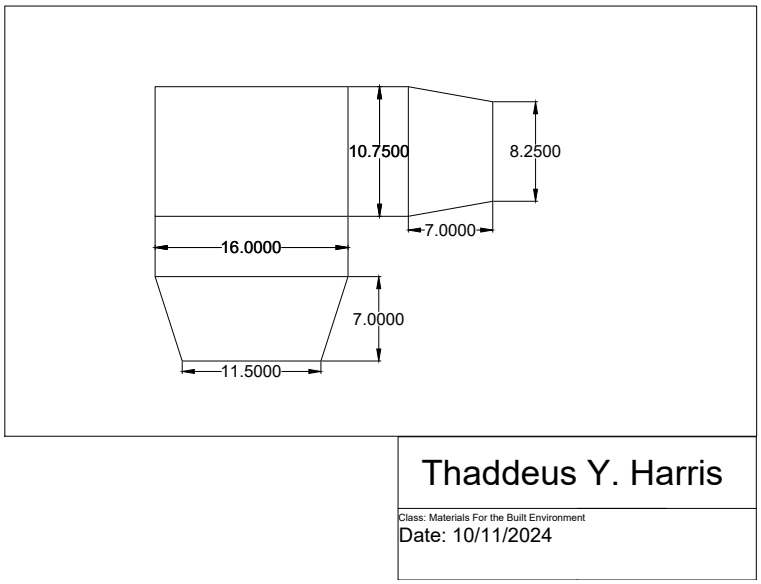

Figure 2: Test Apparatus

Literature Review

The study “Effect of Mg Content on the Performance of Al-Zn-Mg Sacrificial Anodes” discusses how adding magnesium to aluminum-zinc alloys impacts the performance as galvanic anodes (1). Magnesium has a higher oxidation potential so when added to aluminum, it prevents the oxidation layer on the surface of the aluminum. This characteristic makes magnesium more protective when in contact with steel. The results showed that increasing magnesium in the aluminum-zinc alloy increases the protective abilities of the anodes in corrosive saltwater environments. This finding is particularly relevant to marine environments where structures like boats and offshore wind farms are at risk of severe corrosion due to saltwater exposure. However, a significant drawback to higher magnesium content in the anode alloy is that the lifespan of the anode decreases, resulting in it needing to be replaced more often. This could be an issue for projects in marine environments that are difficult to provide frequent maintenance, even though the anodes are more protective. In addition, finding the balance between better protection and a longer lifespan of an anode is critical for real-life applications. Finding the optimal balance between the best protection and a long lifespan of an anode is critical for real-life applications. Despite this limitation, the researchers concluded that aluminum- zinc-magnesium alloys are effective when it comes to saltwater environments and suggests that they could be worthy for short term applications where more effective protection is valued over longer lifespan and less frequent replacements of anodes. This study highlights the importance of balancing protection with practicality, which our experiment builds on by testing aluminum, zinc, and magnesium to determine the optimal material that can balance both factors. Building on these results, this experiment tests aluminum, zinc, and magnesium to determine the optimal material that balances protection and anode lifespan in marine environments. By analyzing the performance of these three materials as anodes, our study aims to further the past research and give more insight on improvement of continuous protection against steel corrosion in marine environments. Further research into improving the formulation of aluminum-zinc-magnesium alloys could lead to improvements in overall effectiveness of galvanic anodes.

The paper “Long-term Performance of Galvanic Anodes for the Protection of Steel Reinforced Concrete Structures” considers the performance of galvanic anodes over extended periods of time (2). The study evaluates the performance of zinc and other galvanic anodes in the protection of steel-reinforced concrete from saltwater corrosion. The researchers found that zinc anodes perform reliably over time, providing continued protection over time without need for frequent replacement. This reliability is due to zinc’s low oxidation potential, which results in a longer lifespan than other materials, like magnesium. However, while zinc anodes do not require frequent maintenance, the research highlights the importance of the correct installation practices and environmental conditions, because moisture content in concrete can affect the protectiveness of zinc anodes. This increases the need for understanding certain environmental impacts on the durability of zinc anodes. These results indicate that environments with higher chloride levels can lead to higher corrosive levels and increased corrosion rates. This results in less effective protection and shorter lifespans of zinc anodes.

[1] Orozco, R., et al. “Effect of Mg Content on the Performance of Al-Zn-Mg Sacrificial Anodes - Journal of Materials Engineering and Performance.” SpringerLink, Kluwer Academic Publishers-Plenum Publishers, 14 Apr. 2007, link.springer.com/article/10.1007/s11665007-9037-z.

[2] Kamde, Deepak K., et al. “Long-Term Performance of Galvanic Anodes for the Protection of Steel Reinforced Concrete Structures.” Web of Science, Oct. 2021, www.webofscience.com/wos/woscc/full-record/WOS:000689334600003.