US011980587B2

(12) **United States Patent**
Wood et al.

(10) **Patent No.: US 11,980,587 B2**
(45) **Date of Patent: May 14, 2024**

(54) **SYSTEMS, METHODS, AND APPARATUSES FOR PRODUCING AND PACKAGING FLUIDS**

(71) Applicant: **DEKA Products Limited Partnership**, Manchester, NH (US)

(72) Inventors: **Ryan P. Wood**, Bedford, NH (US); **Michael J. Haynes**, Manchester, NH (US); **Hans Erik Johnson**, Salem, NH (US); **Thaddeus Joseph Hughes**, Manchester, NH (US); **Robert Houston Lawler, Jr.**, Manchester, NH (US)

(73) Assignee: **DEKA Products Limited Partnership**, Manchester, NH (US)

(*) Notice: Subject to any disclaimer, the term of this patent is extended or adjusted under 35 U.S.C. 154(b) by 167 days.

(21) Appl. No.: **17/484,425**

(22) Filed: **Sep. 24, 2021**

(65) **Prior Publication Data**

US 2022/0160582 A1 May 26, 2022

Related U.S. Application Data

(60) Provisional application No. 63/118,410, filed on Nov. 25, 2020.

(51) **Int. Cl.**
A61J 1/20 (2006.01)
A61J 1/10 (2006.01)
(Continued)

(52) **U.S. Cl.**
CPC ***A61J 1/2013*** (2015.05); ***A61J 1/10*** (2013.01); ***A61J 1/2037*** (2015.05); ***A61J 1/2079*** (2015.05);
(Continued)

(58) **Field of Classification Search**
CPC A61J 1/2013; A61J 1/2037; A61J 1/2079; A61J 1/10; A61J 2205/60; B01F 35/7137; B65B 3/003
(Continued)

(56) **References Cited**

U.S. PATENT DOCUMENTS

3,327,709 A 6/1967 Nehring et al.
3,509,879 A 5/1970 Bathish et al.
(Continued)

FOREIGN PATENT DOCUMENTS

CN 100453308 C 1/2009
DE 29515682 U1 12/1995
(Continued)

OTHER PUBLICATIONS

International Search Report and Written Opinion dated Feb. 12, 2021 received in counterpart international patent application PCT/US2020/052774 from European Patent Office as International Searching Authority, European Patent Office, P.B. 5818 Patentlaan 2 NL—2280 HV Rijswijk (15 pgs).
(Continued)

Primary Examiner — Timothy P. Kelly
Assistant Examiner — Christopher M Afful
(74) *Attorney, Agent, or Firm* — Toohey Law Group, LLC; Kevin D. Mandro

(57) **ABSTRACT**

A liquid concentrate generation system may comprise a manifold having an inlet receptacle including a first piercing member, an outlet receptacle including a second piercing member, and a flow channel connecting the inlet receptacle and outlet receptacle. The system may further comprise a cartridge having an inlet port and an outlet port sealed by a respective first and second cover. The inlet and outlet port may be respectively configured to displace within the inlet receptacle and outlet receptacle from an unspiked position to
(Continued)

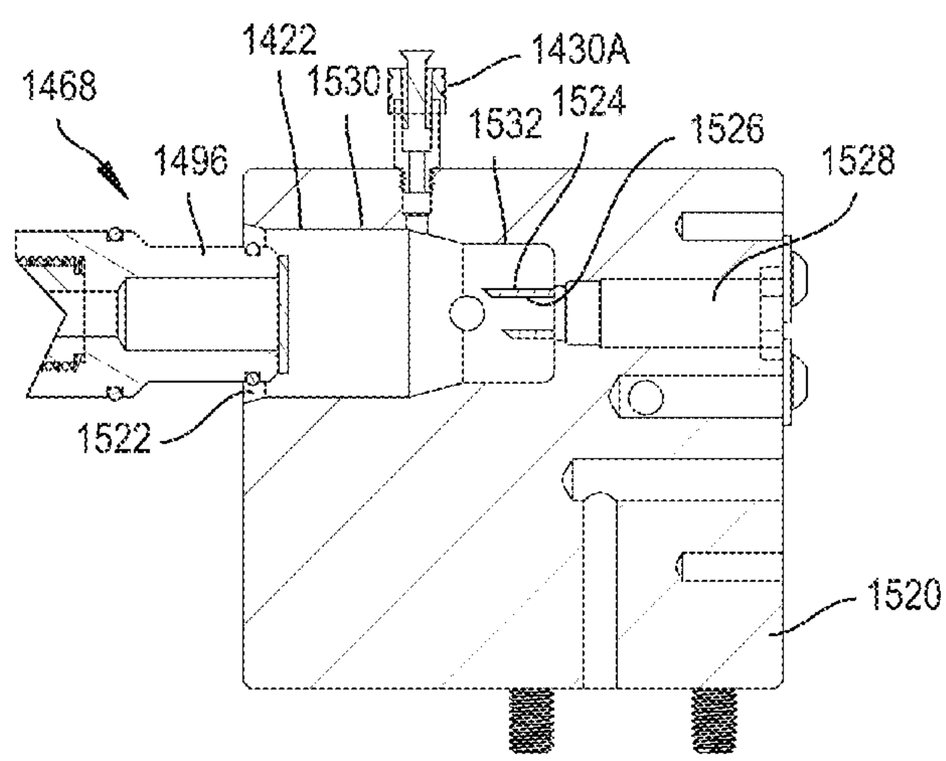

a spiked position. First and second piercing members may be in communication with the flow channel and spaced apart respectively from the first and second cover in the unspiked position. The first and second piercing members may be isolated from the flow channel and may respectively puncture the first and second cover in the spiked position.

25 Claims, 230 Drawing Sheets

(51) **Int. Cl.**
B01F 35/71 (2022.01)
B65B 3/00 (2006.01)

(52) **U.S. Cl.**
CPC ***B01F 35/7137*** (2022.01); ***B65B 3/003*** (2013.01); *A61J 2205/60* (2013.01)

(58) **Field of Classification Search**
USPC 141/10
See application file for complete search history.

(56) **References Cited**

U.S. PATENT DOCUMENTS

4,120,134 A 10/1978 Scholle
4,303,067 A 12/1981 Connolly et al.
4,417,607 A 11/1983 Scholle et al.
4,495,067 A 1/1985 Klein et al.
4,610,790 A 9/1986 Reti et al.
4,694,959 A 9/1987 Ausnit et al.
4,754,786 A 7/1988 Roberts
4,964,261 A 10/1990 Benn
5,129,212 A 7/1992 Duffey et al.
5,341,854 A 8/1994 Zezulka et al.
5,881,535 A 3/1999 Gliniecki et al.
5,976,300 A 11/1999 Buchanan et al.
5,993,425 A * 11/1999 Kriesel A61M 5/152 604/191
6,070,622 A 6/2000 Rutter
6,391,623 B1 * 5/2002 Besemer B01F 33/30 436/501
7,163,035 B2 1/2007 Khan et al.
7,610,115 B2 10/2009 Rob et al.
7,912,579 B2 3/2011 Stettes
8,151,835 B2 4/2012 Khan et al.
8,518,252 B1 8/2013 Li
8,741,155 B2 6/2014 Coulter
9,173,816 B2 11/2015 Reinhardt et al.
9,750,863 B2 9/2017 Minkus
9,830,485 B1 11/2017 Lecky
2005/0171501 A1 8/2005 Kelly
2007/0119121 A1 5/2007 Woods et al.
2008/0051937 A1 2/2008 Khan et al.
2011/0017570 A1 1/2011 Graf
2012/0312415 A1 12/2012 Gay et al.
2013/0343857 A1 12/2013 Yoshikane et al.
2015/0360865 A1 12/2015 Massey
2017/0319770 A1 11/2017 Fitzgerald et al.
2018/0044047 A1 2/2018 Fianchini et al.
2019/0002136 A1 1/2019 Bomgaars et al.
2021/0155507 A1 5/2021 Kamen et al.

FOREIGN PATENT DOCUMENTS

EP 3090721 A1 11/2016
FR 2590231 A1 5/1987
WO WO 1998038091 9/1998
WO WO2017127632 A1 7/2017
WO WO-2018130944 A1 * 7/2018 ..... A61L 2/206

OTHER PUBLICATIONS

United States Pharmacopoeia <1231> Water for Pharmaceutical Purposes , webpage: <http://www.uspbpep.com/usp29/v29240/usp29nf24s0_c1231.html>, retrieved Apr. 27, 2021.
Communications Relating to the Results of the Partial International Search and Provisional Opinion on Patentability mailed Jan. 11, 2022 received in counterpart international patent application PCT/US2021/052012 from European Patent Office as International Searching Authority, European Patent Office, P.B. 5818 Patentlaan 2 NL—2280 HV Rijswijk (9 pgs).

* cited by examiner

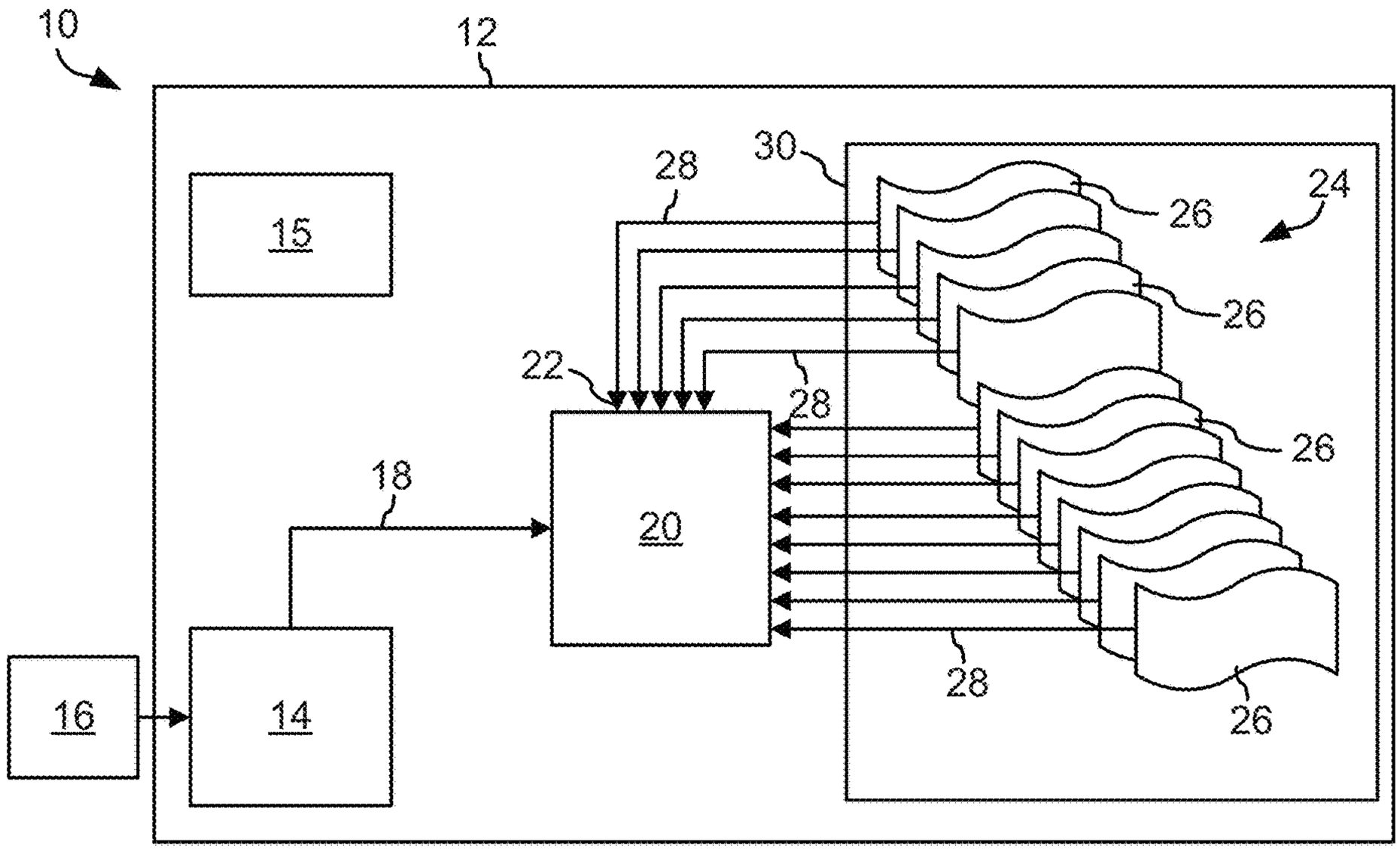
10
12
15
28
30
24
26
26
22
28
26
18
20
28
16
14
26

FIG. 1

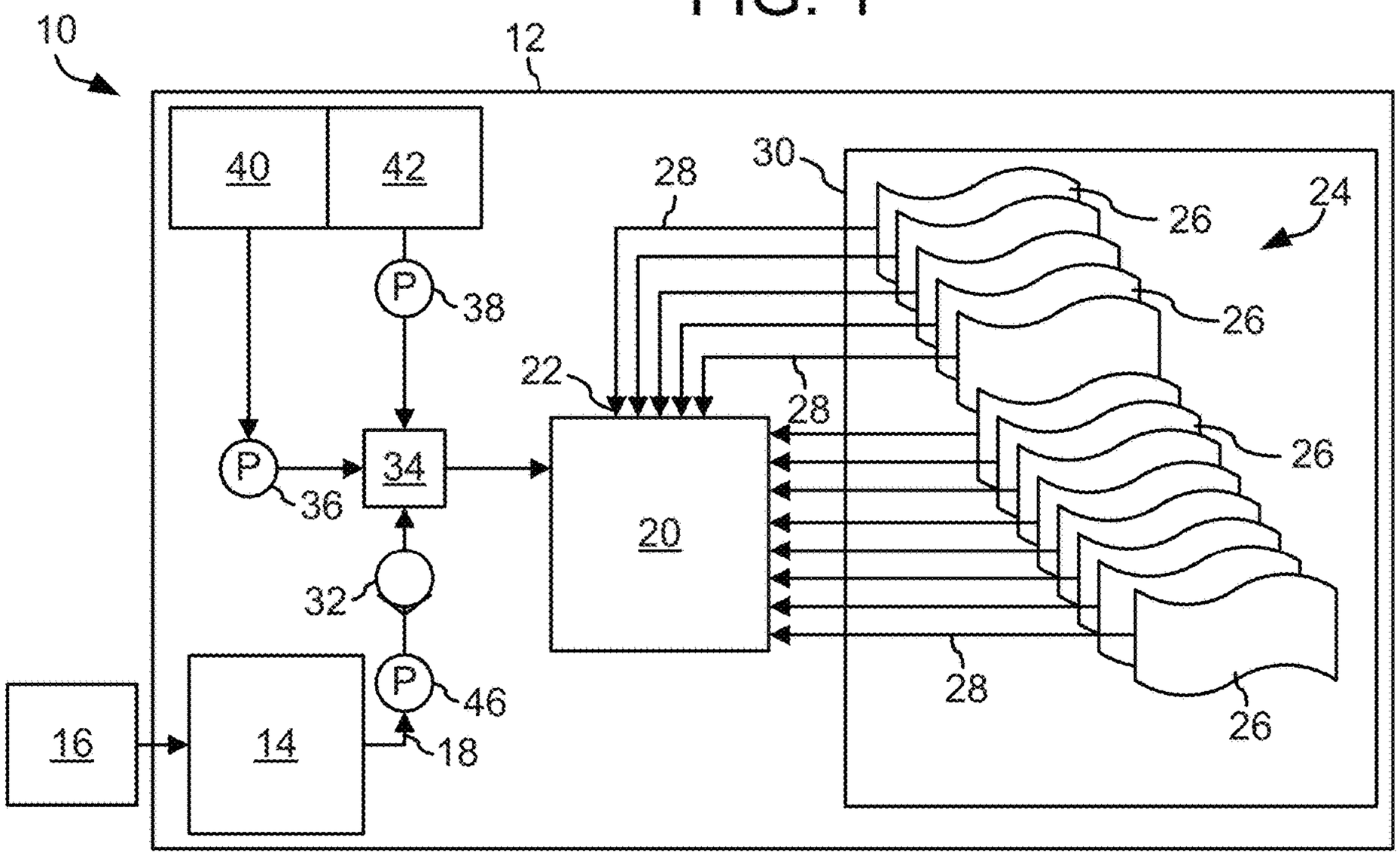
10
12
40
42
28
30
24
26
P
38
26
22
28
P
34
26
36
20
32
28
P
46
16
14
18
26

FIG. 2A

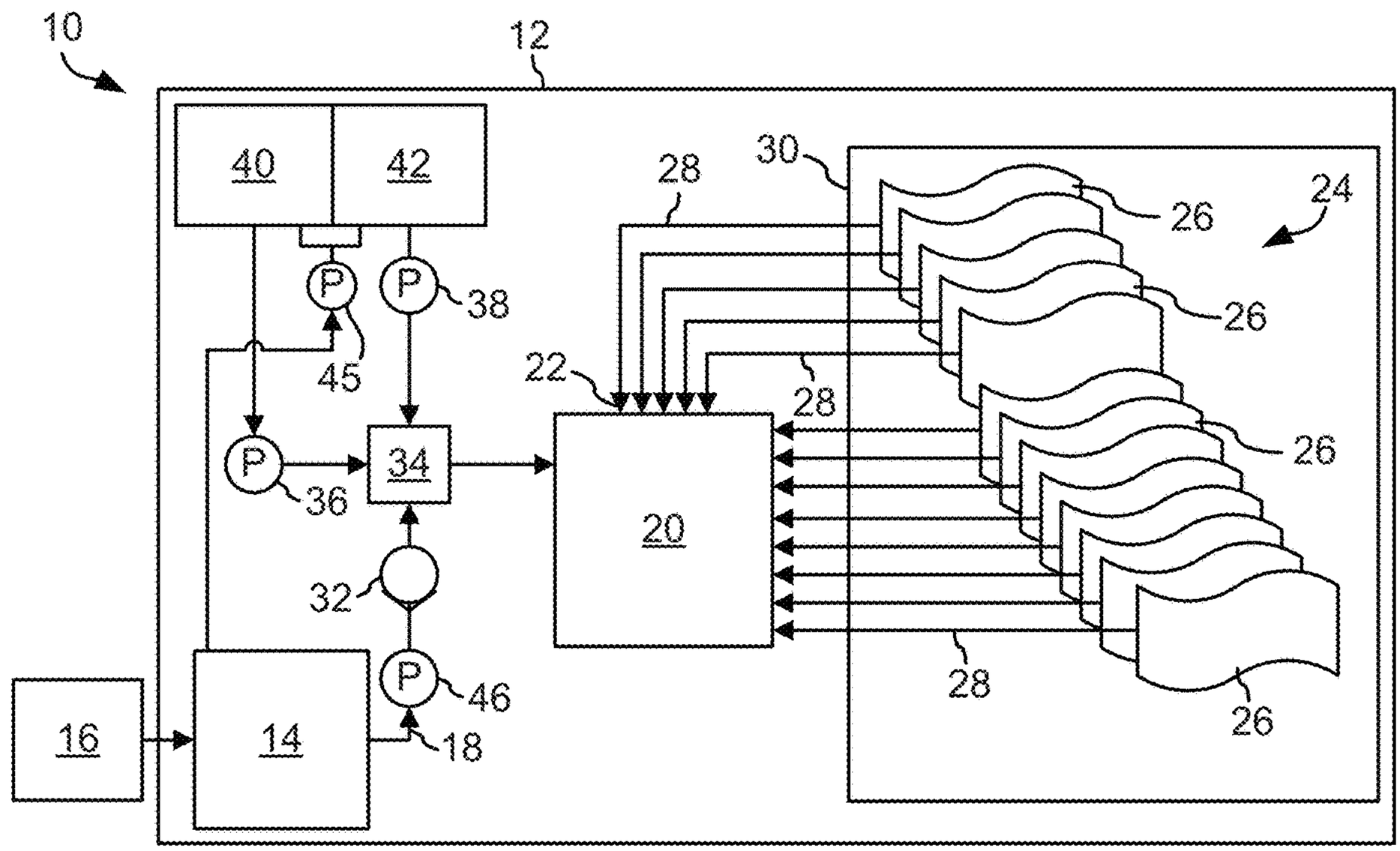
10
12
40
42
P
38
45
P
34
36
32
P
46
18
16
14
22
28
30
24
26
20

FIG. 2B

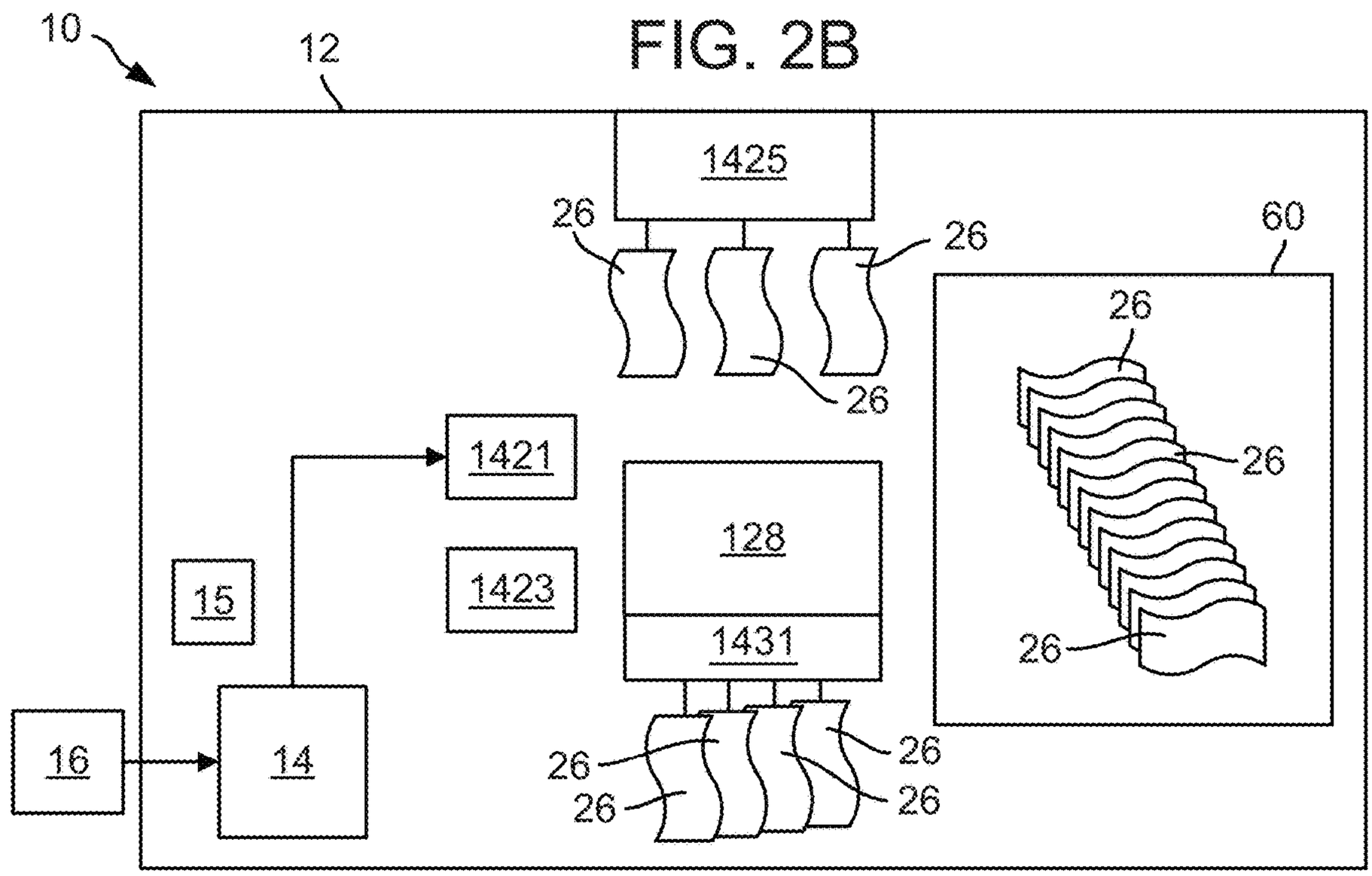
10
12
1425
26
60
1421
128
1423
15
1431
16
14

FIG. 3

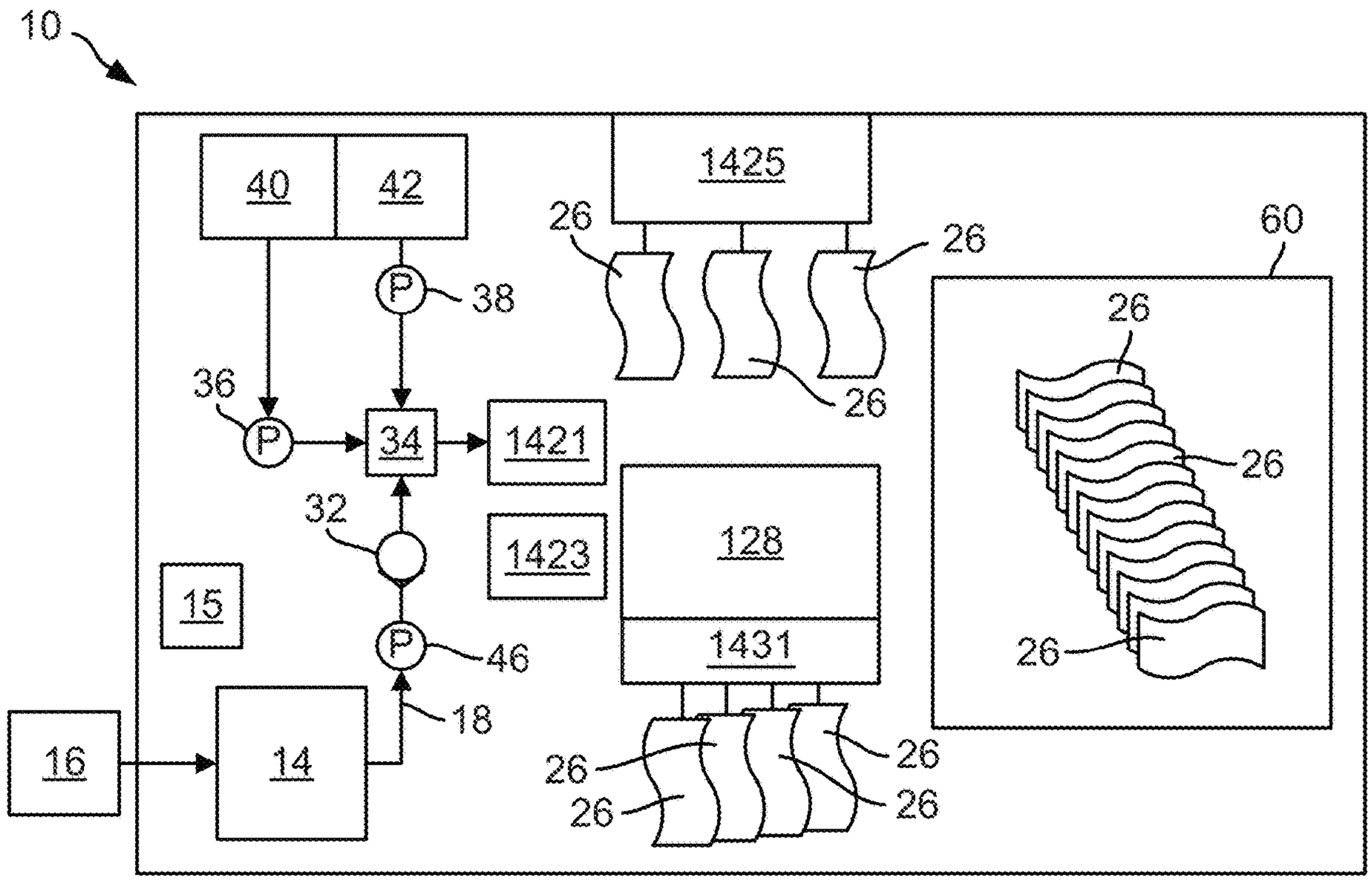
10
40
42
1425
26
26
60
38
26
36
34
1421
26
26
32
1423
128
15
1431
46
26
18
16
14
26
26
26
26

FIG. 4A

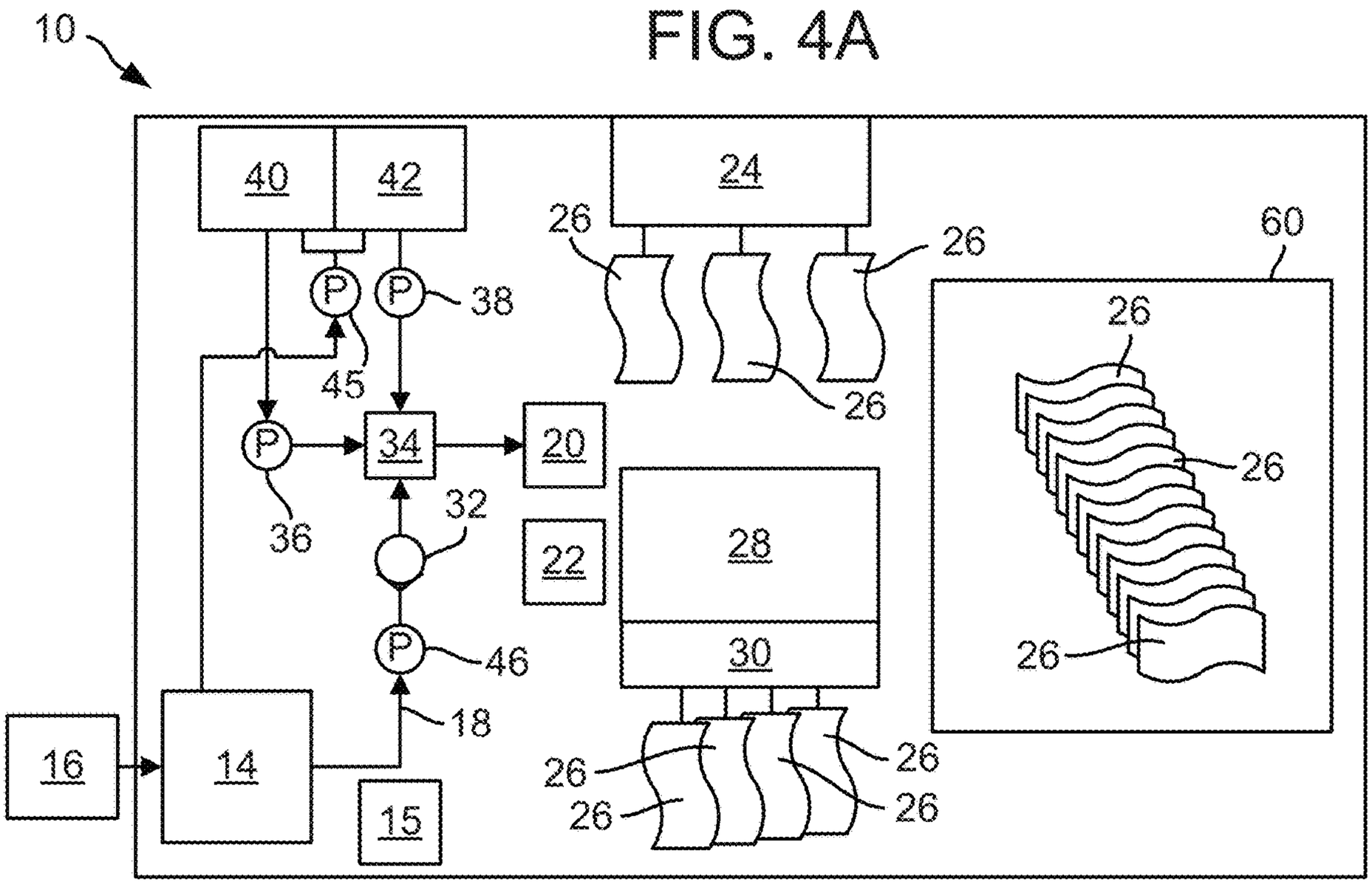
10
40
42
24
26
26
60
38
26
45
26
34
20
26
36
32
22
28
26
46
30
18
16
14
26
26
15
26
26

FIG. 4B

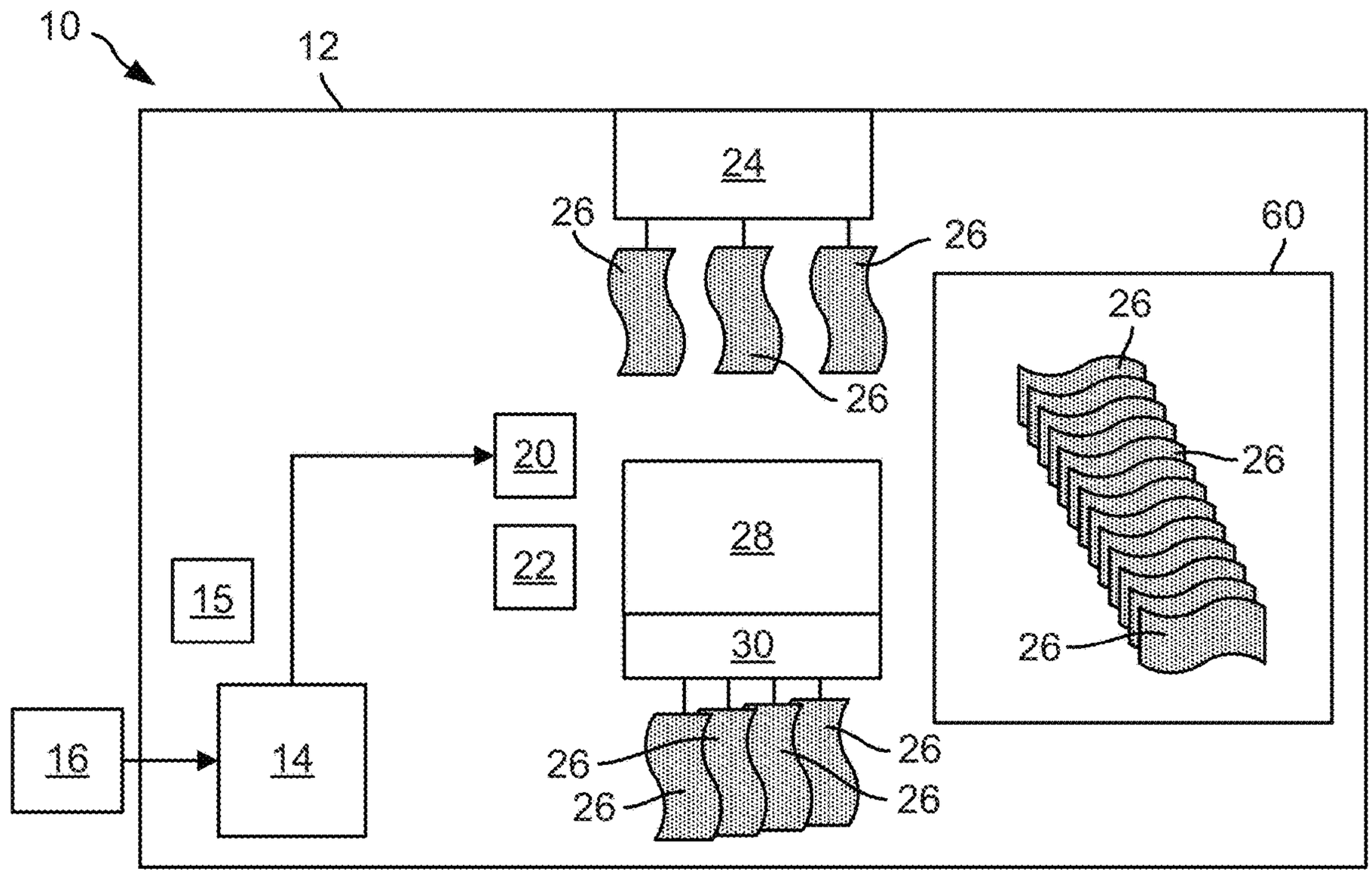
10
12
24
26
26
60
26
26
26
20
22
28
15
30
26
16
14
26
26
26
26

FIG. 5A

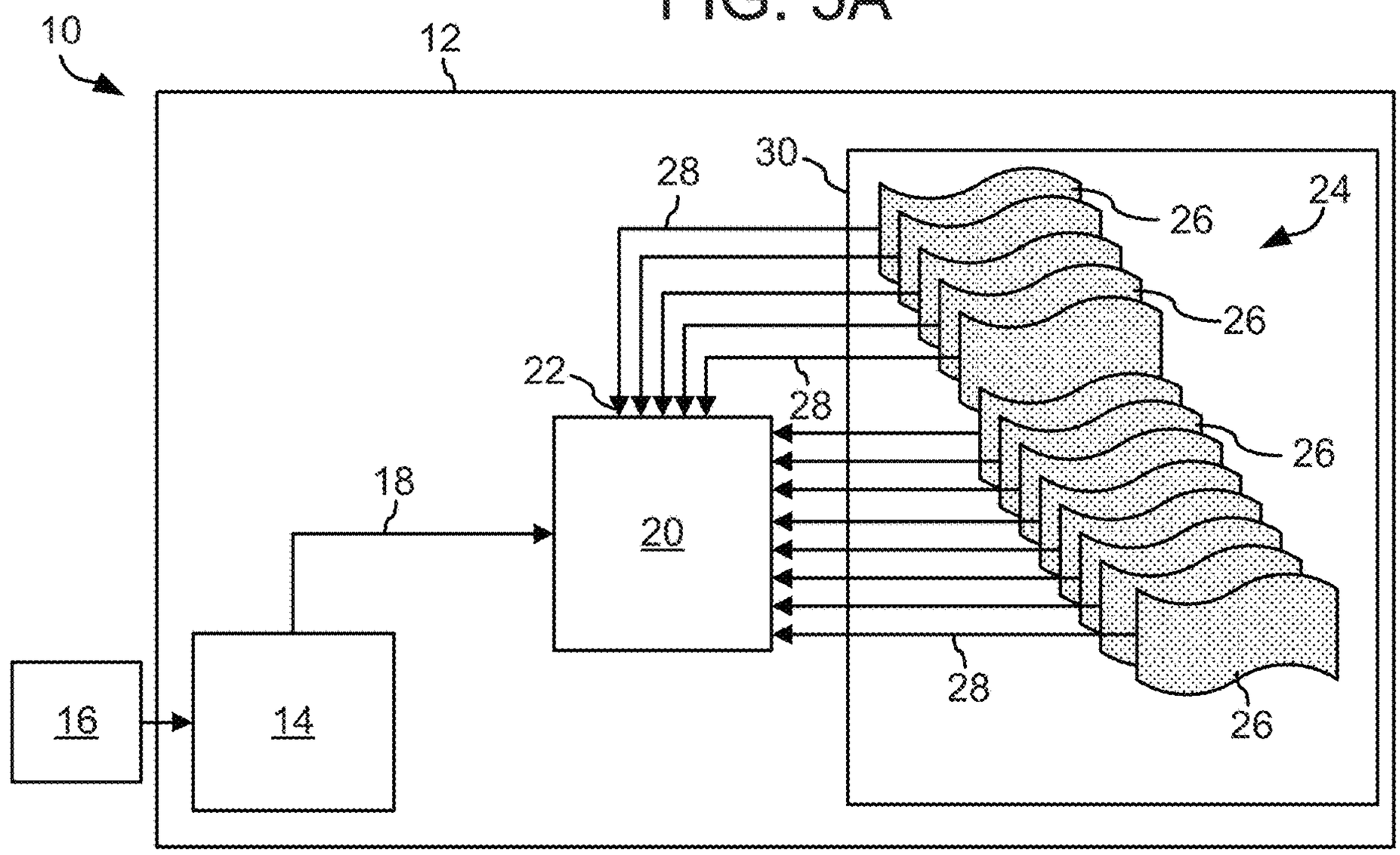
10
12
30
28
24
26
26
22
28
26
18
20
26
16
14
28
26

FIG. 5B

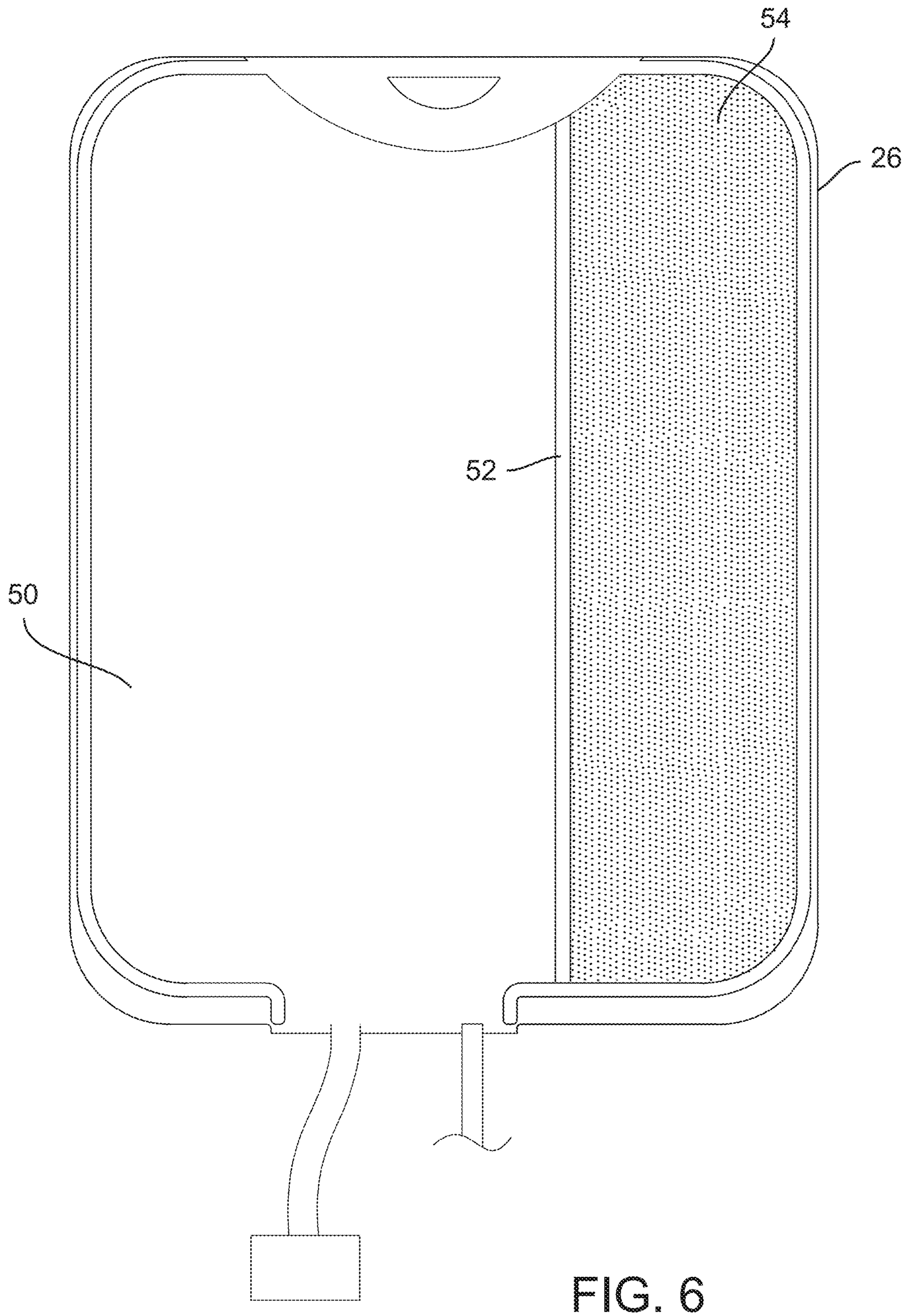

FIG. 6

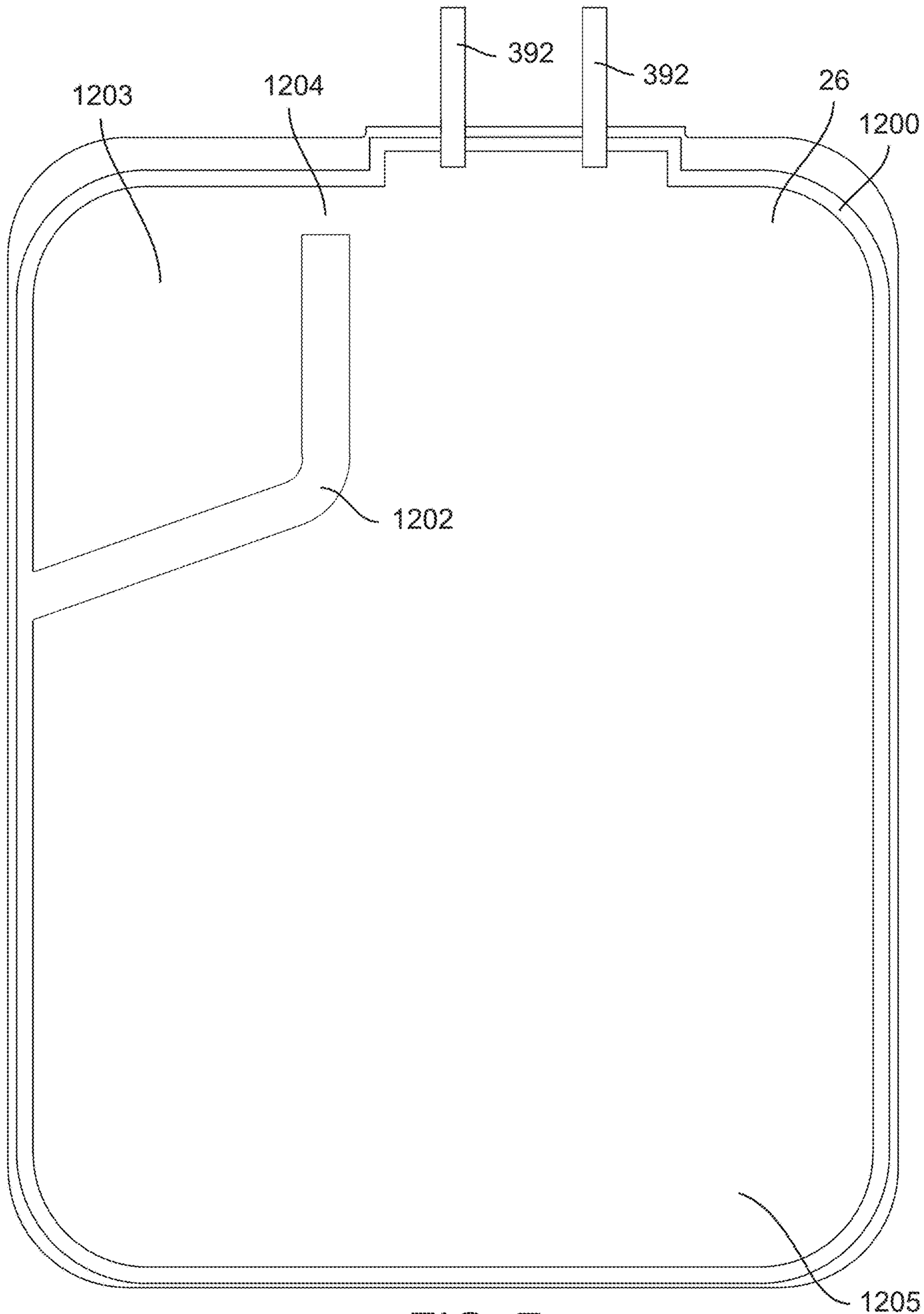

FIG. 7

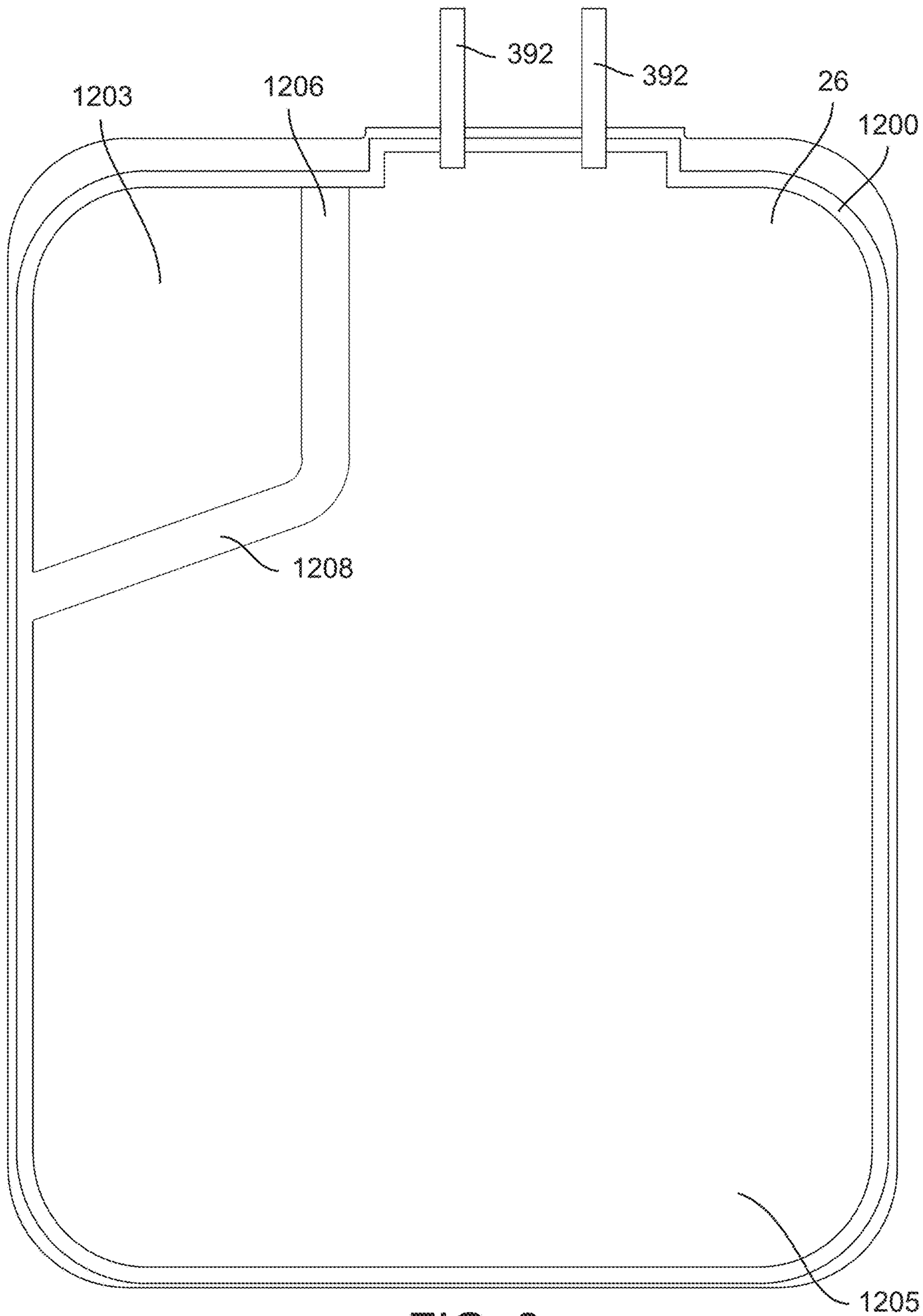

FIG. 8

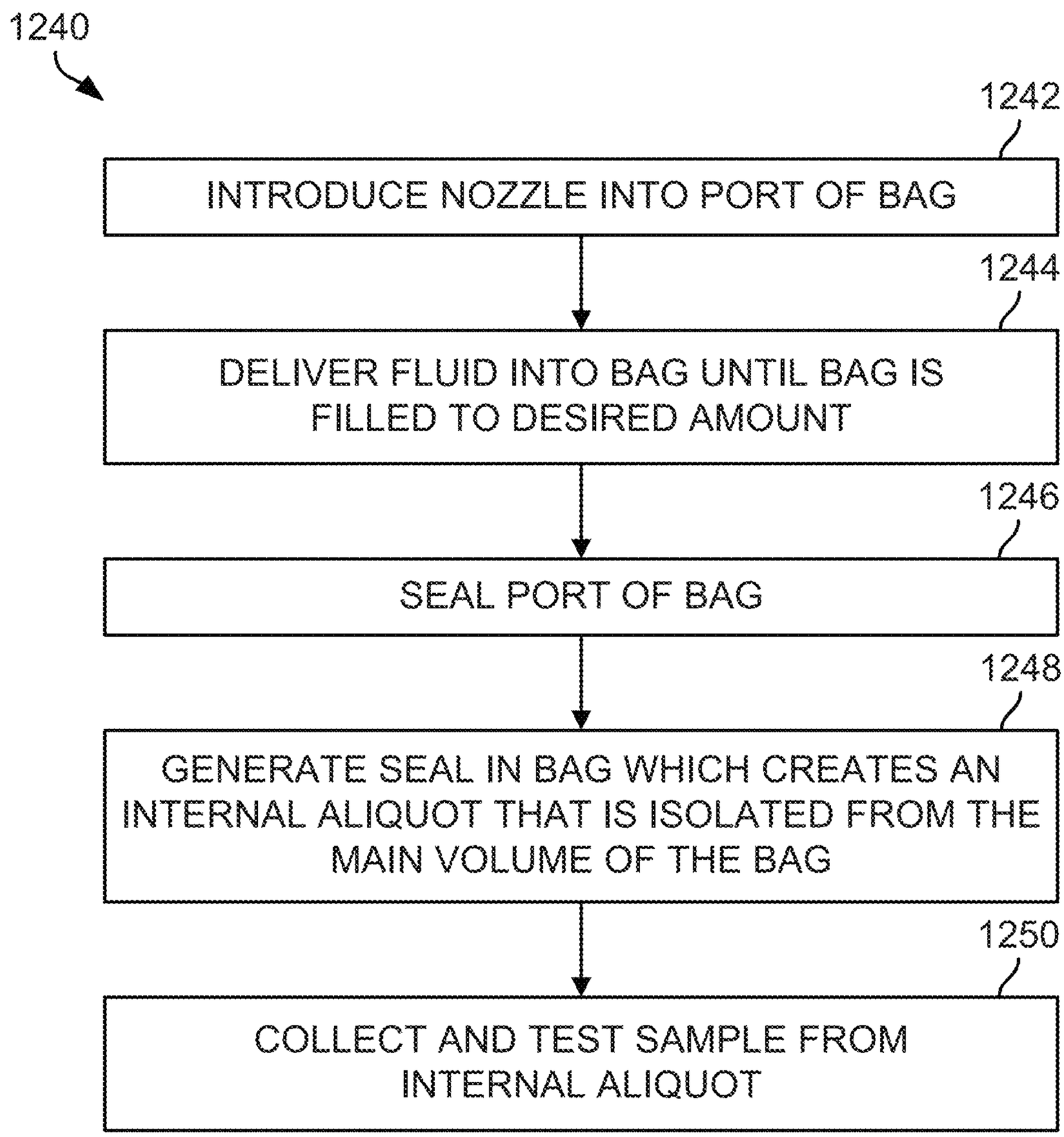
1240
1242
INTRODUCE NOZZLE INTO PORT OF BAG
1244
DELIVER FLUID INTO BAG UNTIL BAG IS FILLED TO DESIRED AMOUNT
1246
SEAL PORT OF BAG
1248
GENERATE SEAL IN BAG WHICH CREATES AN INTERNAL ALIQUOT THAT IS ISOLATED FROM THE MAIN VOLUME OF THE BAG
1250
COLLECT AND TEST SAMPLE FROM INTERNAL ALIQUOT

FIG. 9

FIG. 10

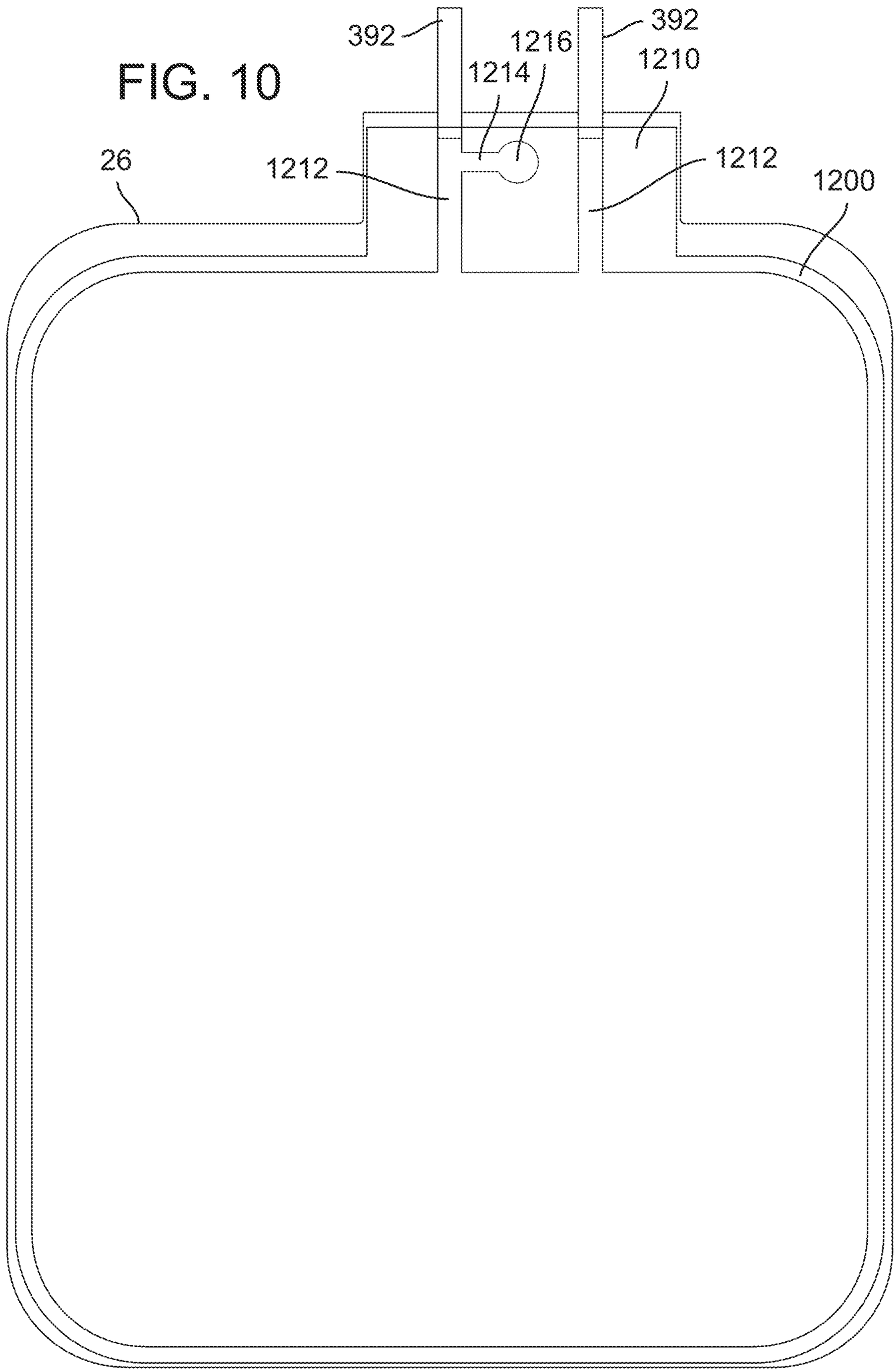

FIG. 11

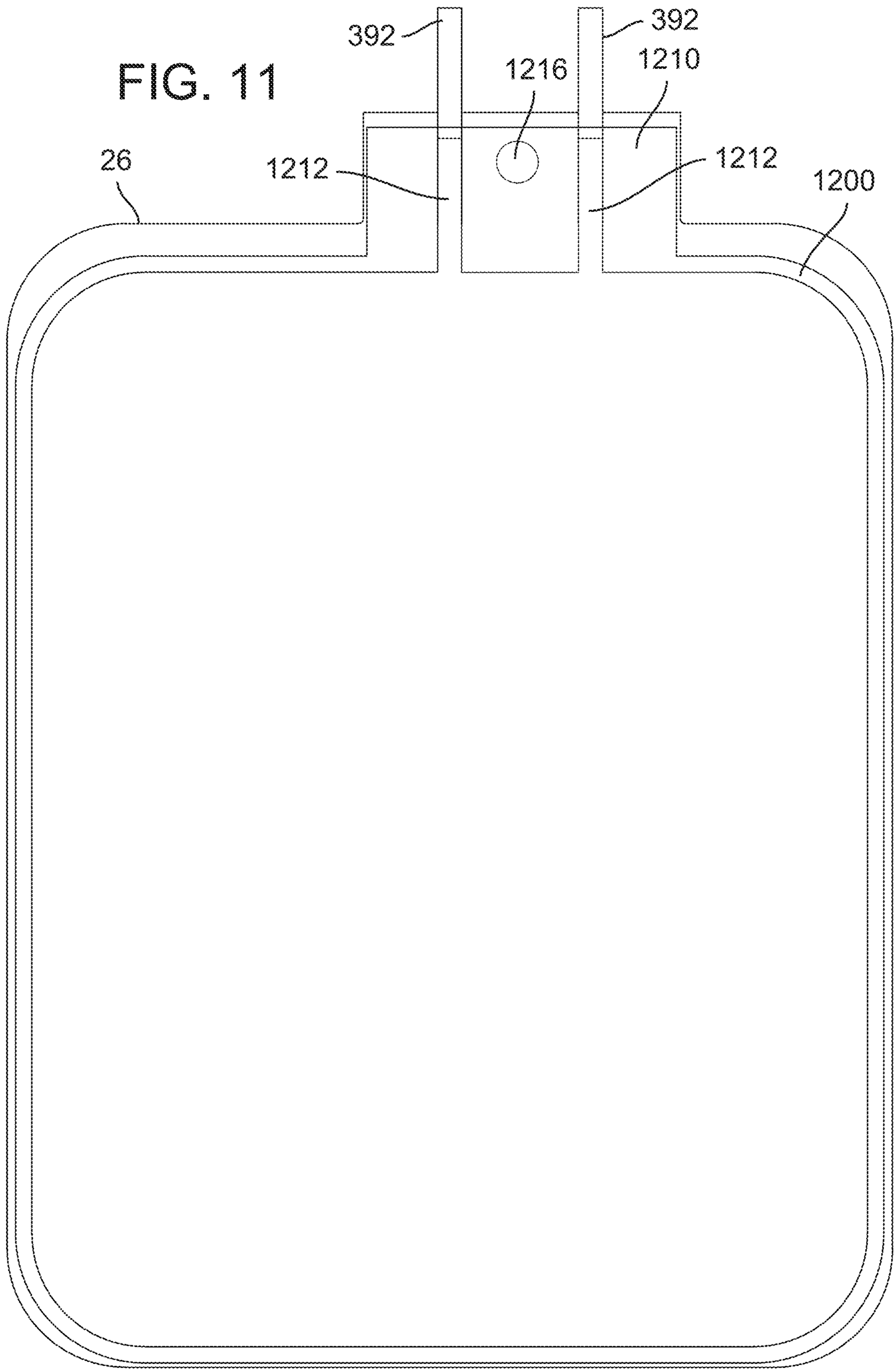

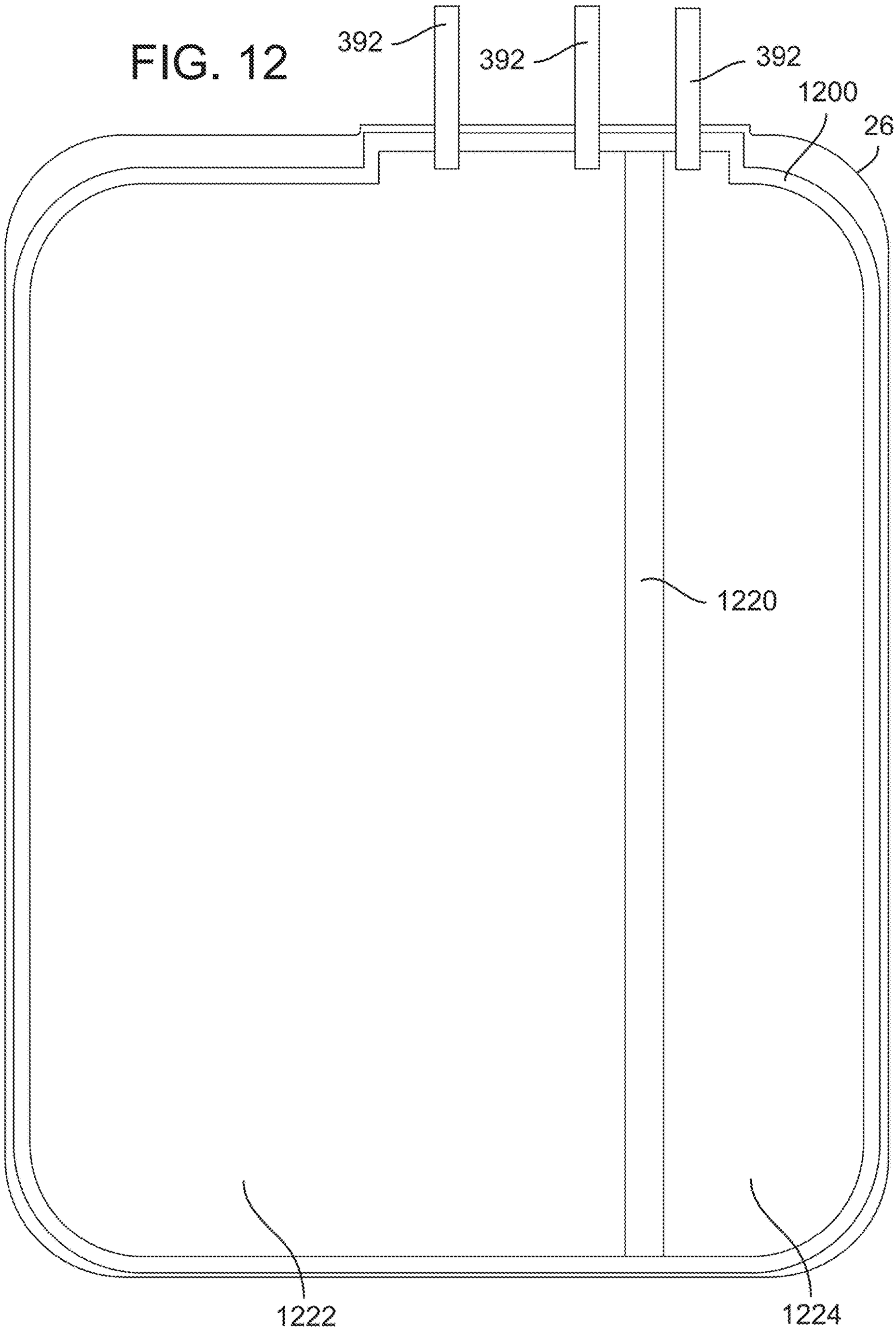
FIG. 12
392
392
392
1200
26
1220
1222
1224

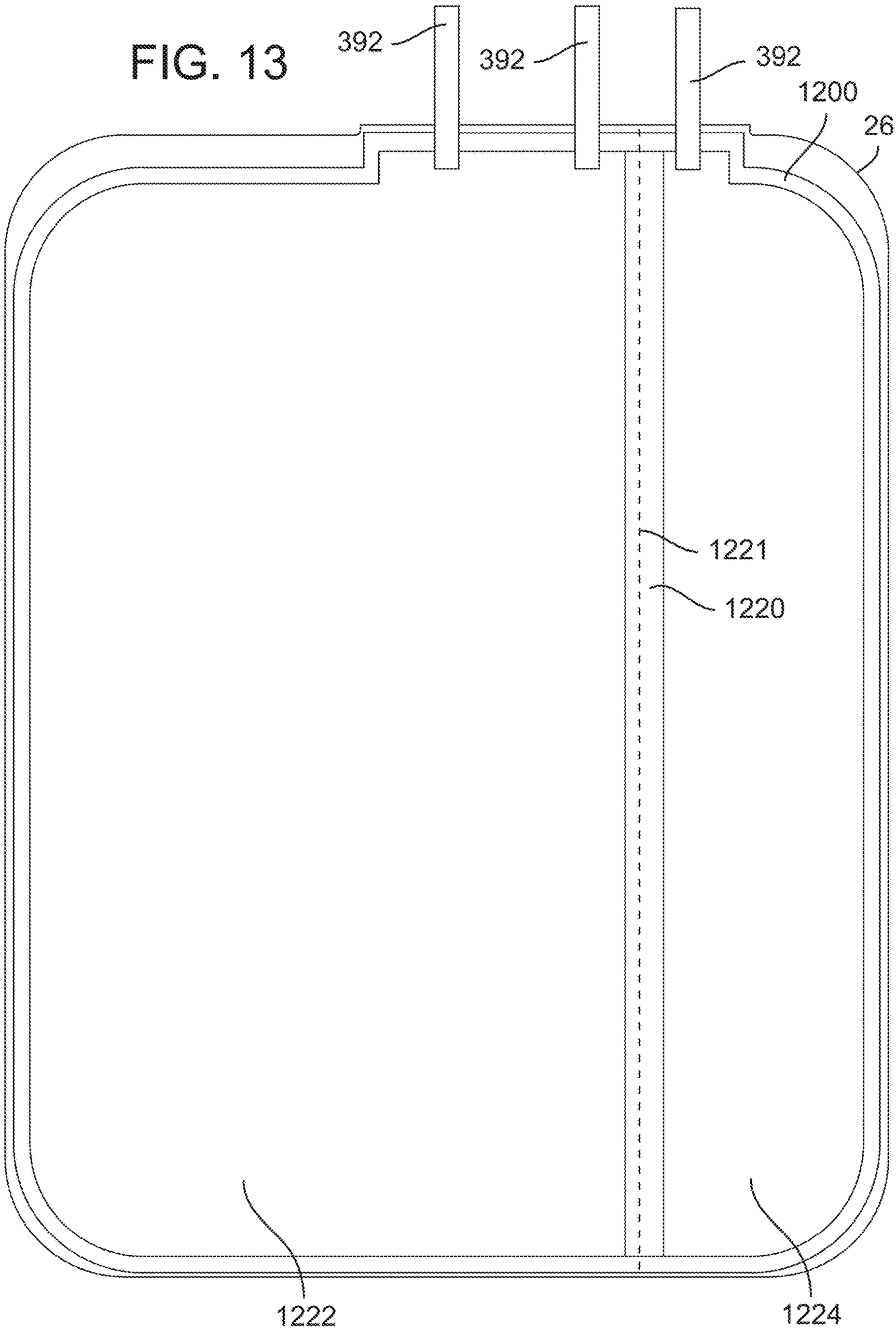
FIG. 13
392
392
392
1200
26
1221
1220
1222
1224

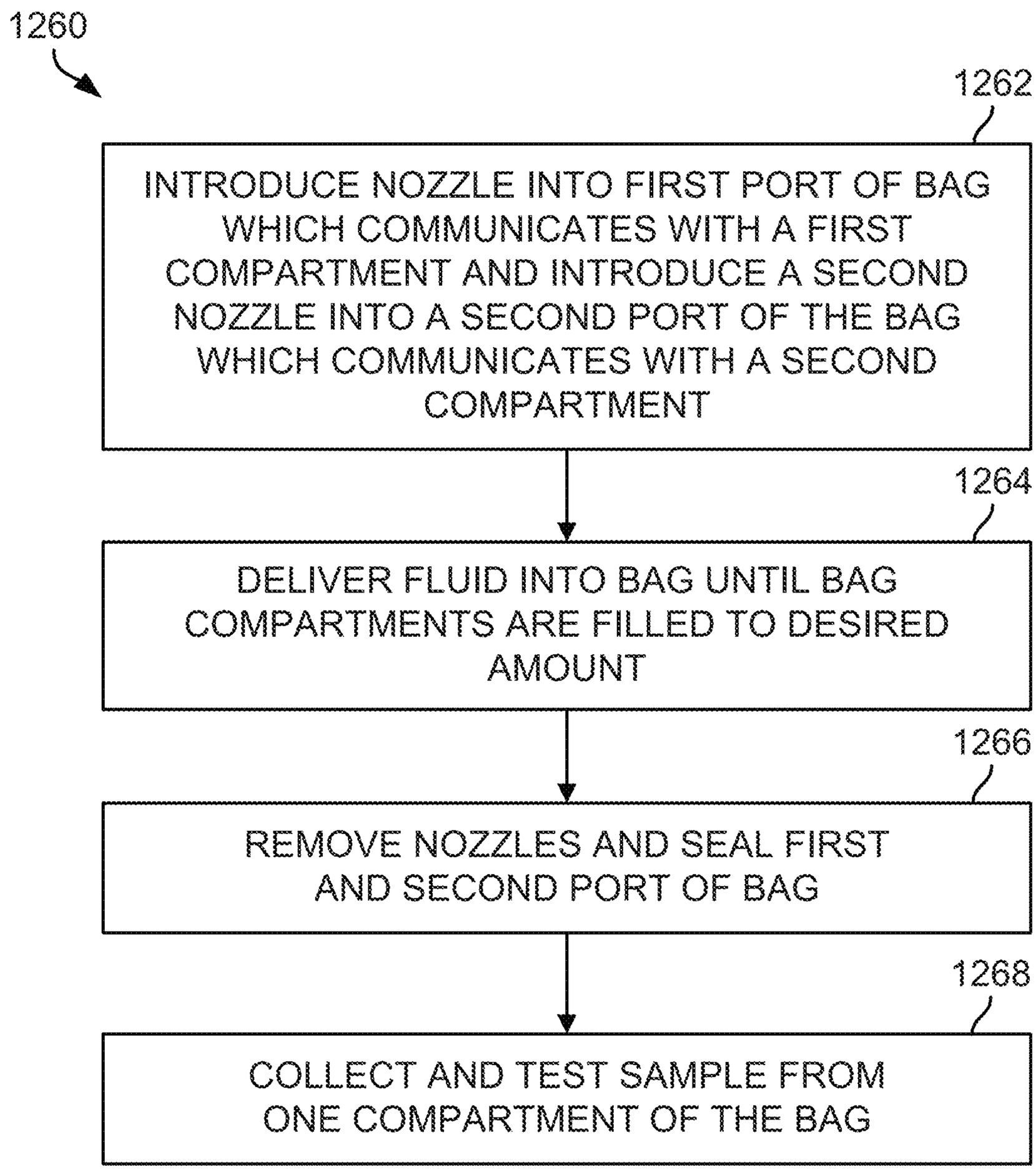
1260
1262
INTRODUCE NOZZLE INTO FIRST PORT OF BAG WHICH COMMUNICATES WITH A FIRST COMPARTMENT AND INTRODUCE A SECOND NOZZLE INTO A SECOND PORT OF THE BAG WHICH COMMUNICATES WITH A SECOND COMPARTMENT
1264
DELIVER FLUID INTO BAG UNTIL BAG COMPARTMENTS ARE FILLED TO DESIRED AMOUNT
1266
REMOVE NOZZLES AND SEAL FIRST AND SECOND PORT OF BAG
1268
COLLECT AND TEST SAMPLE FROM ONE COMPARTMENT OF THE BAG

FIG. 14

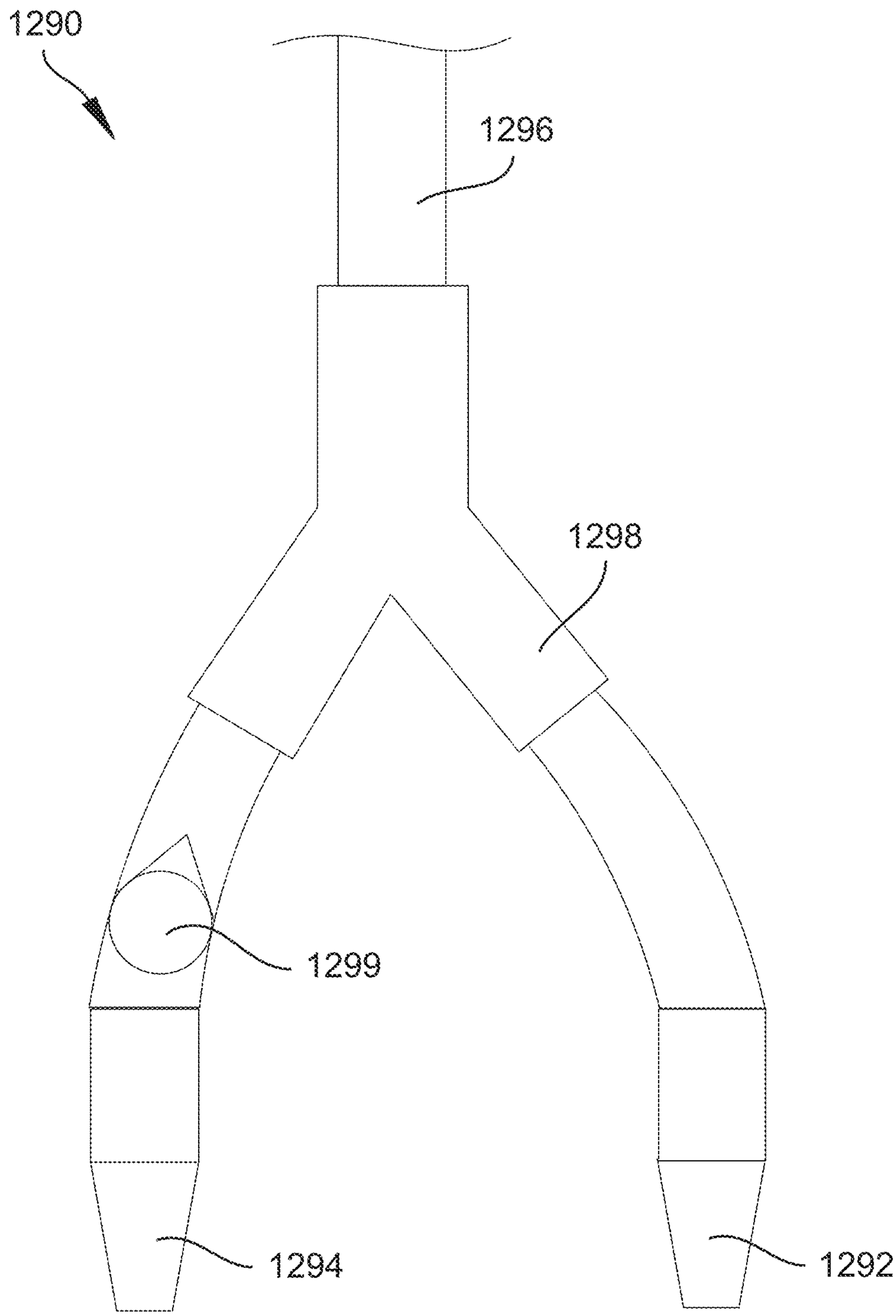

FIG. 15

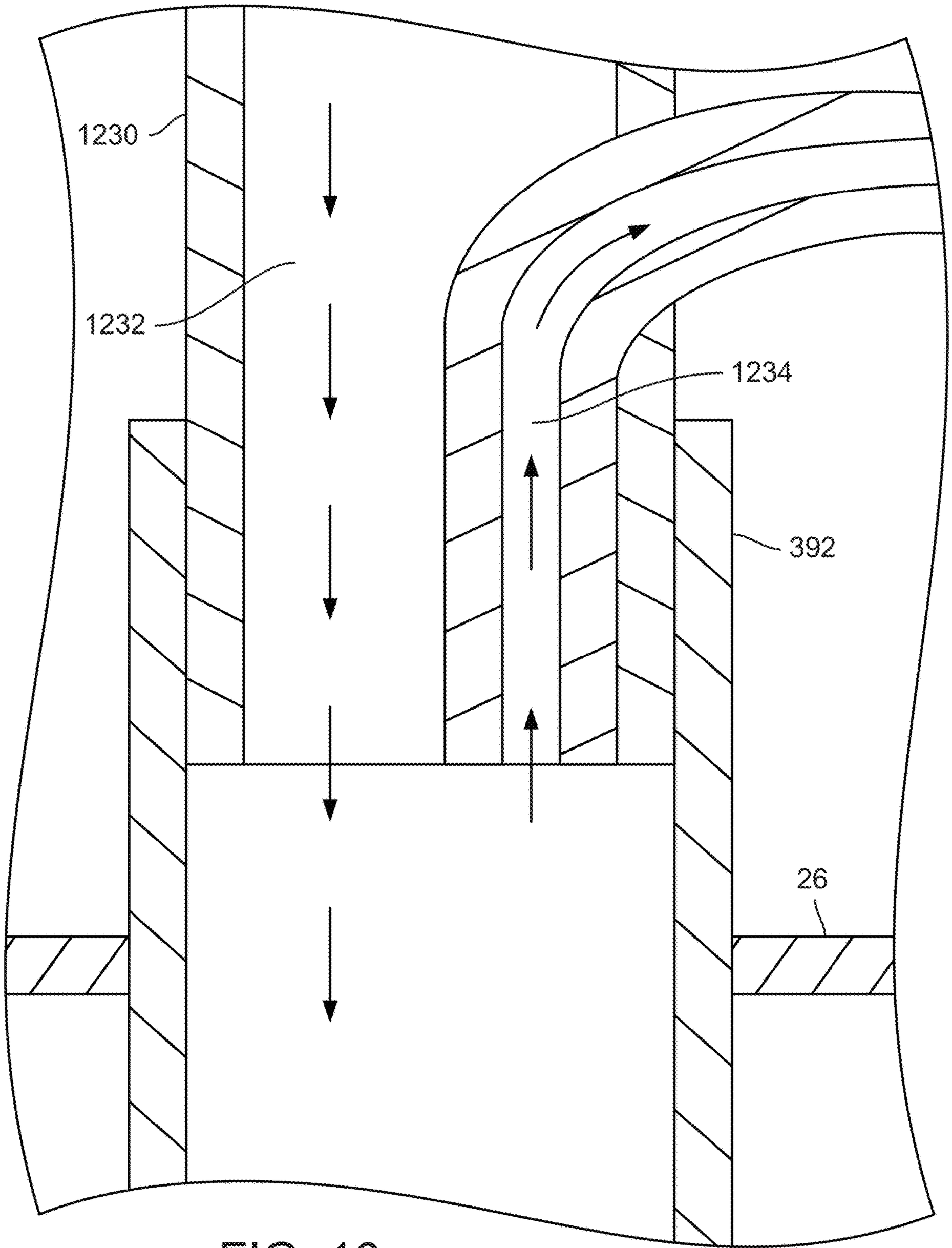

FIG. 16

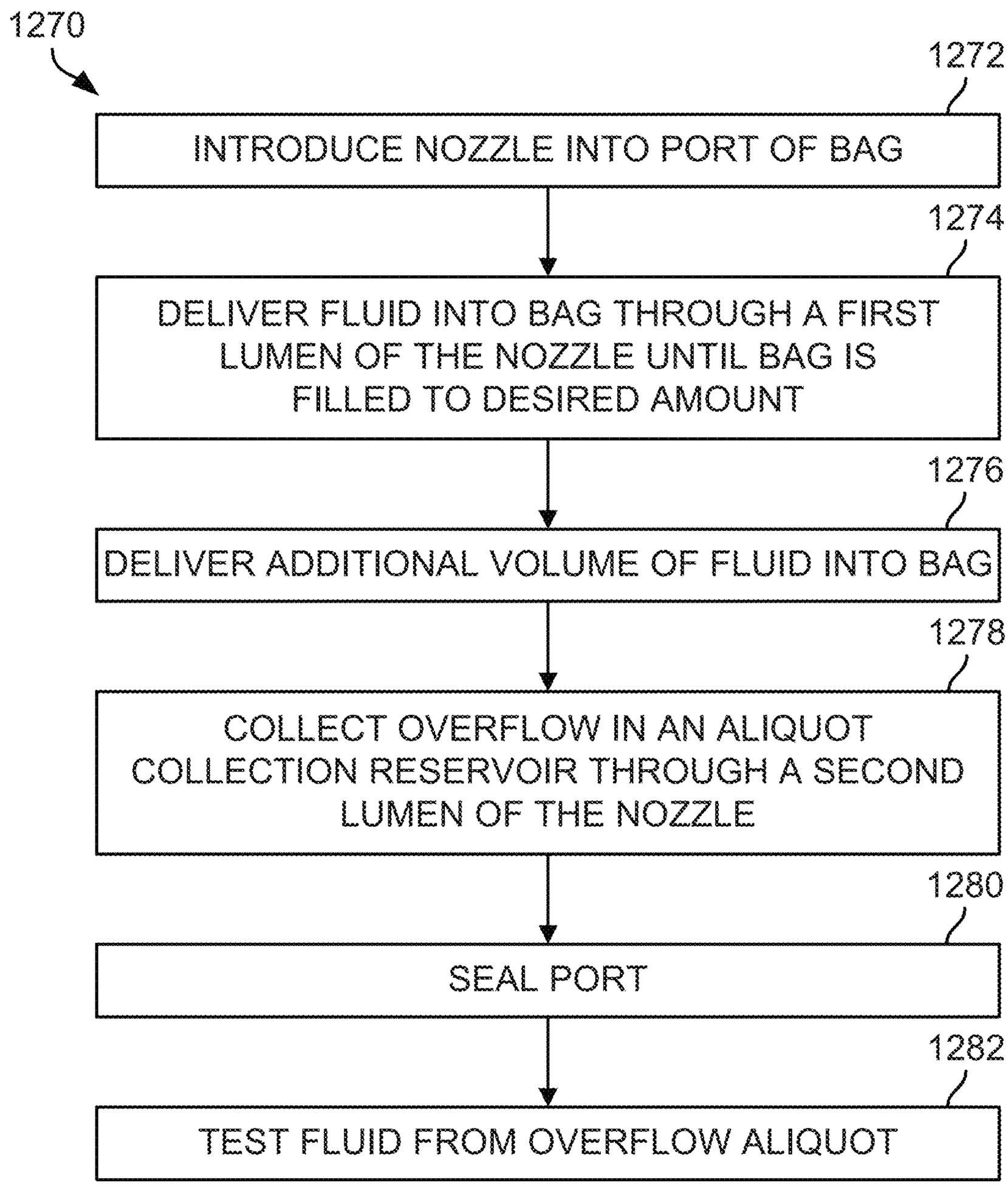
1270
1272
INTRODUCE NOZZLE INTO PORT OF BAG
1274
DELIVER FLUID INTO BAG THROUGH A FIRST LUMEN OF THE NOZZLE UNTIL BAG IS FILLED TO DESIRED AMOUNT
1276
DELIVER ADDITIONAL VOLUME OF FLUID INTO BAG
1278
COLLECT OVERFLOW IN AN ALIQUOT COLLECTION RESERVOIR THROUGH A SECOND LUMEN OF THE NOZZLE
1280
SEAL PORT
1282
TEST FLUID FROM OVERFLOW ALIQUOT

FIG. 17

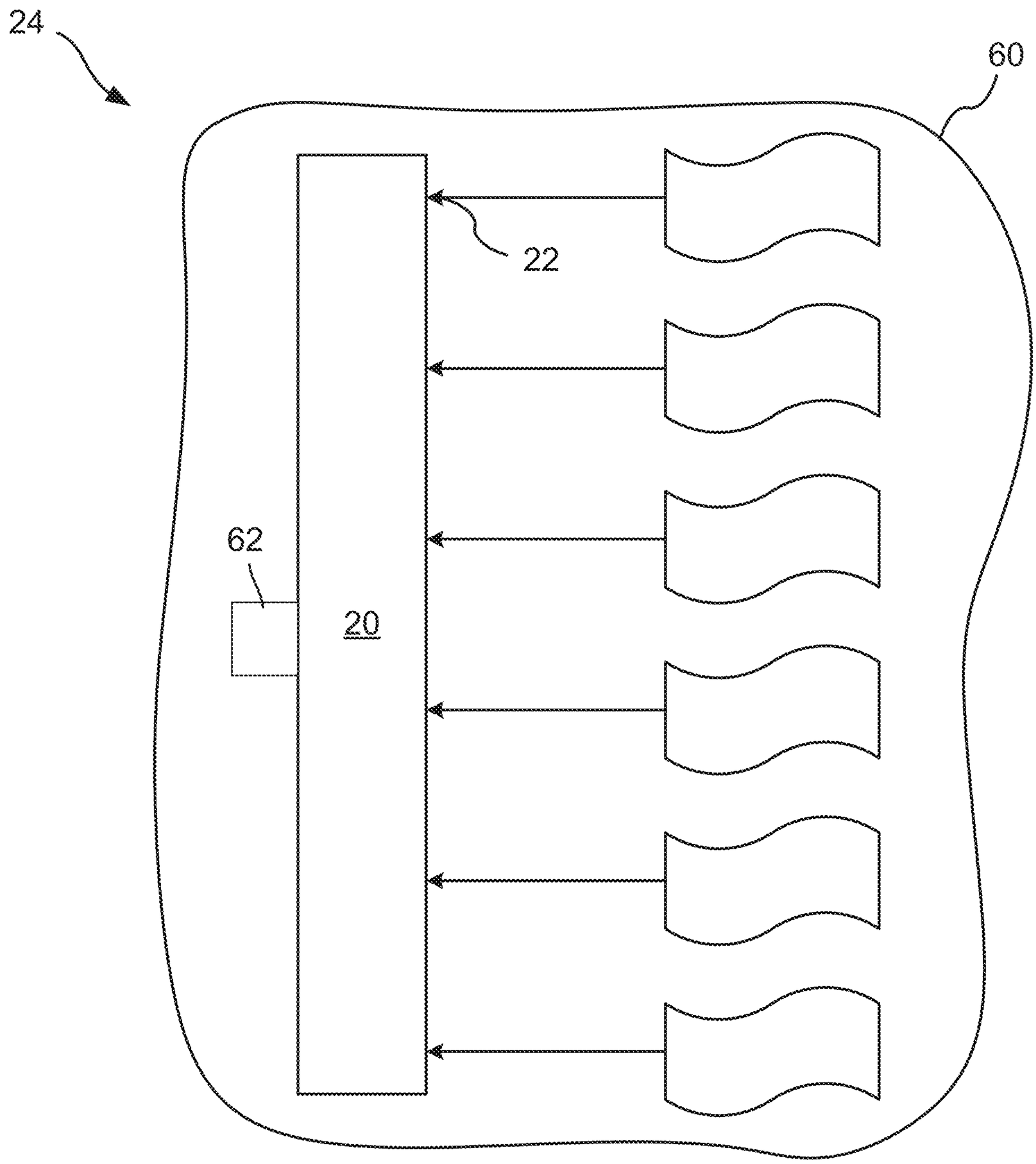

FIG. 18

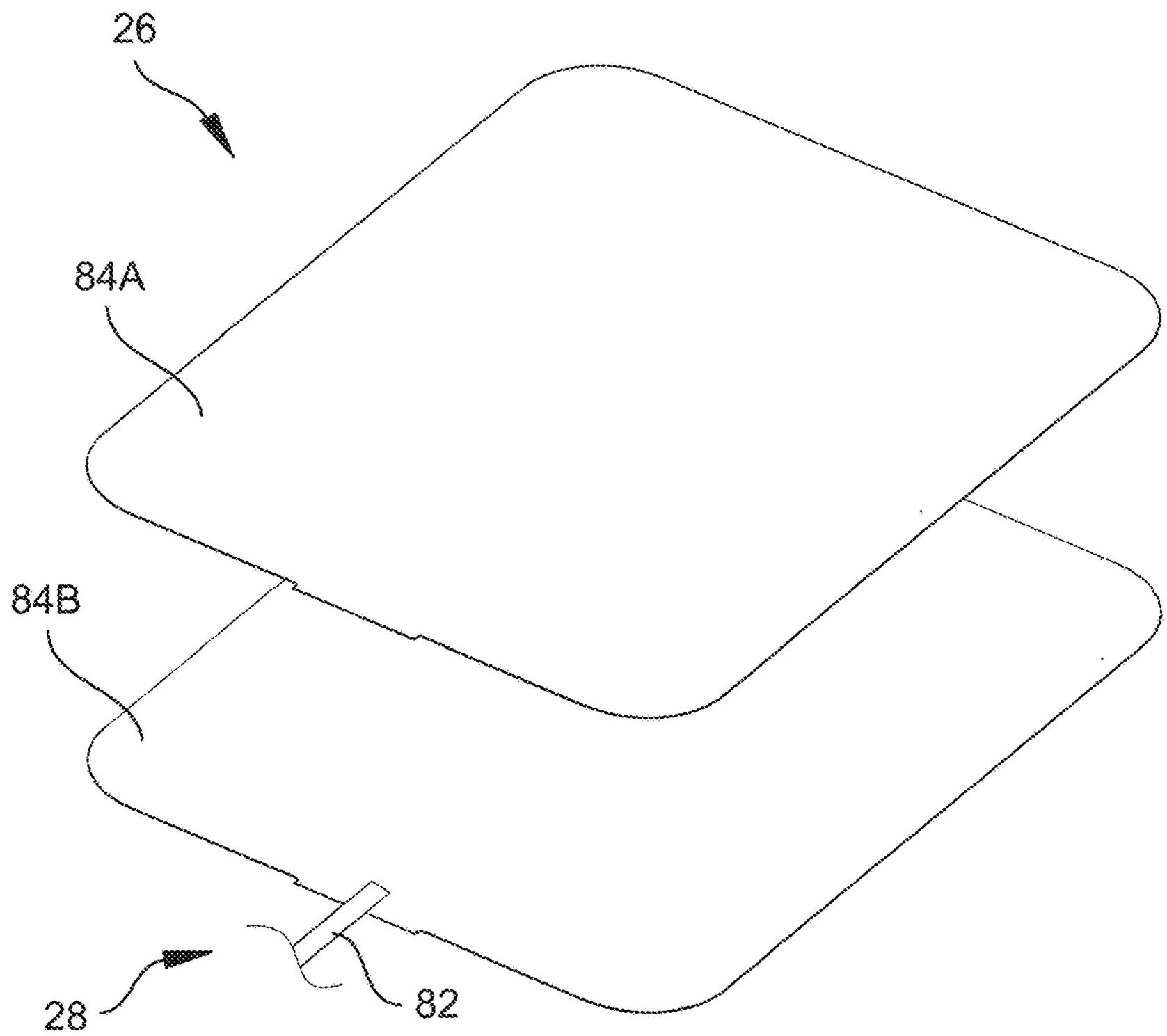

FIG. 19A

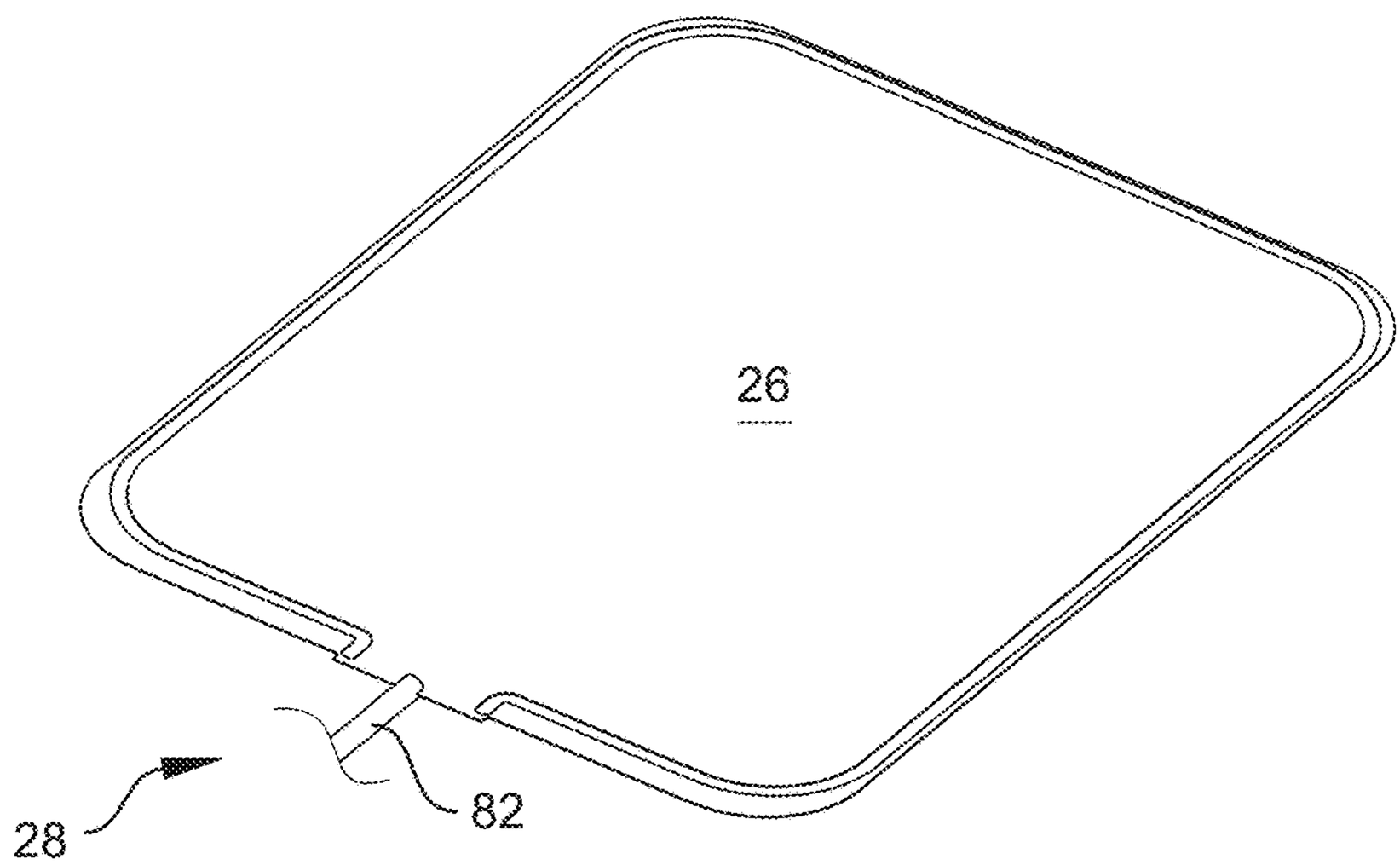

FIG. 19B

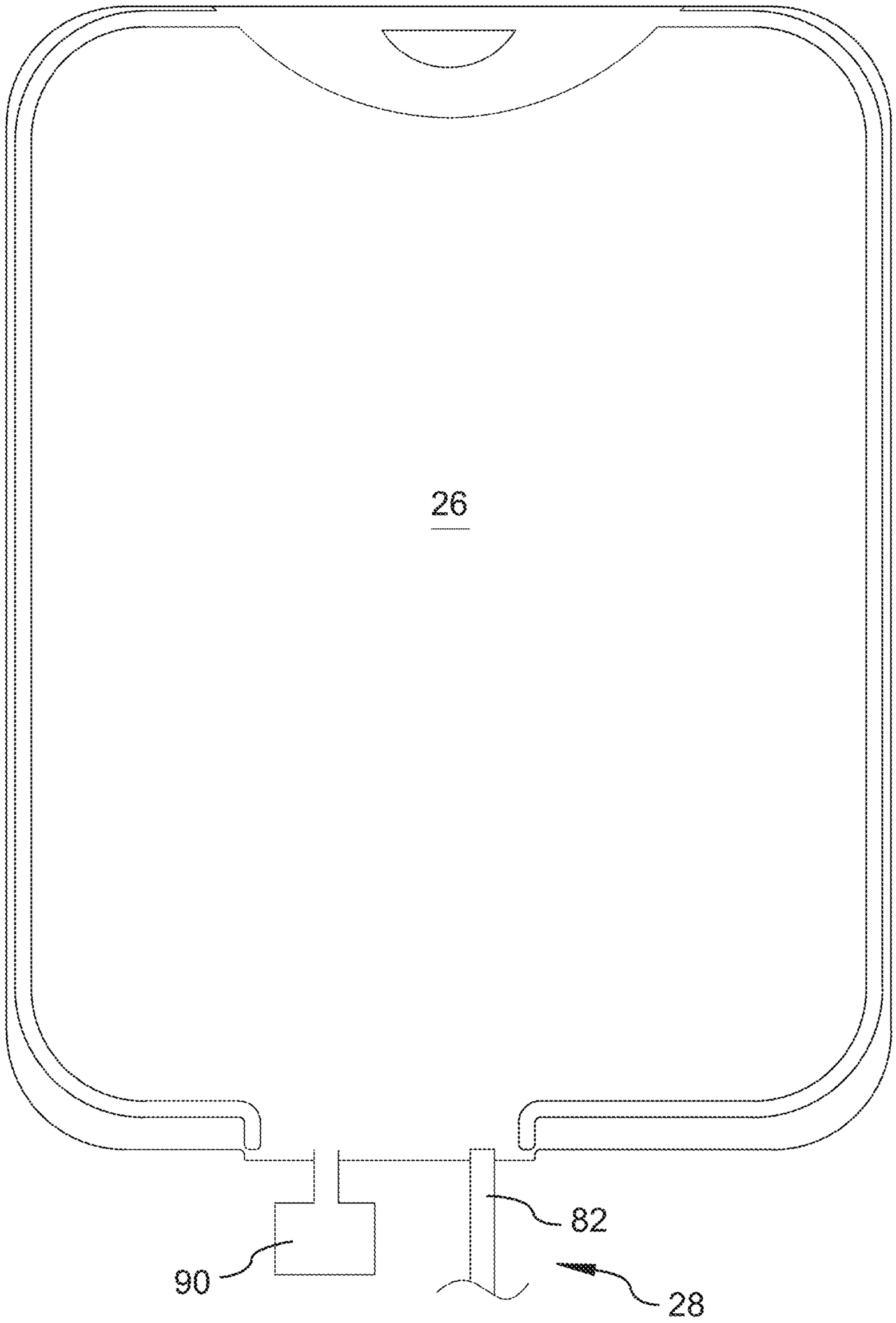

FIG. 20

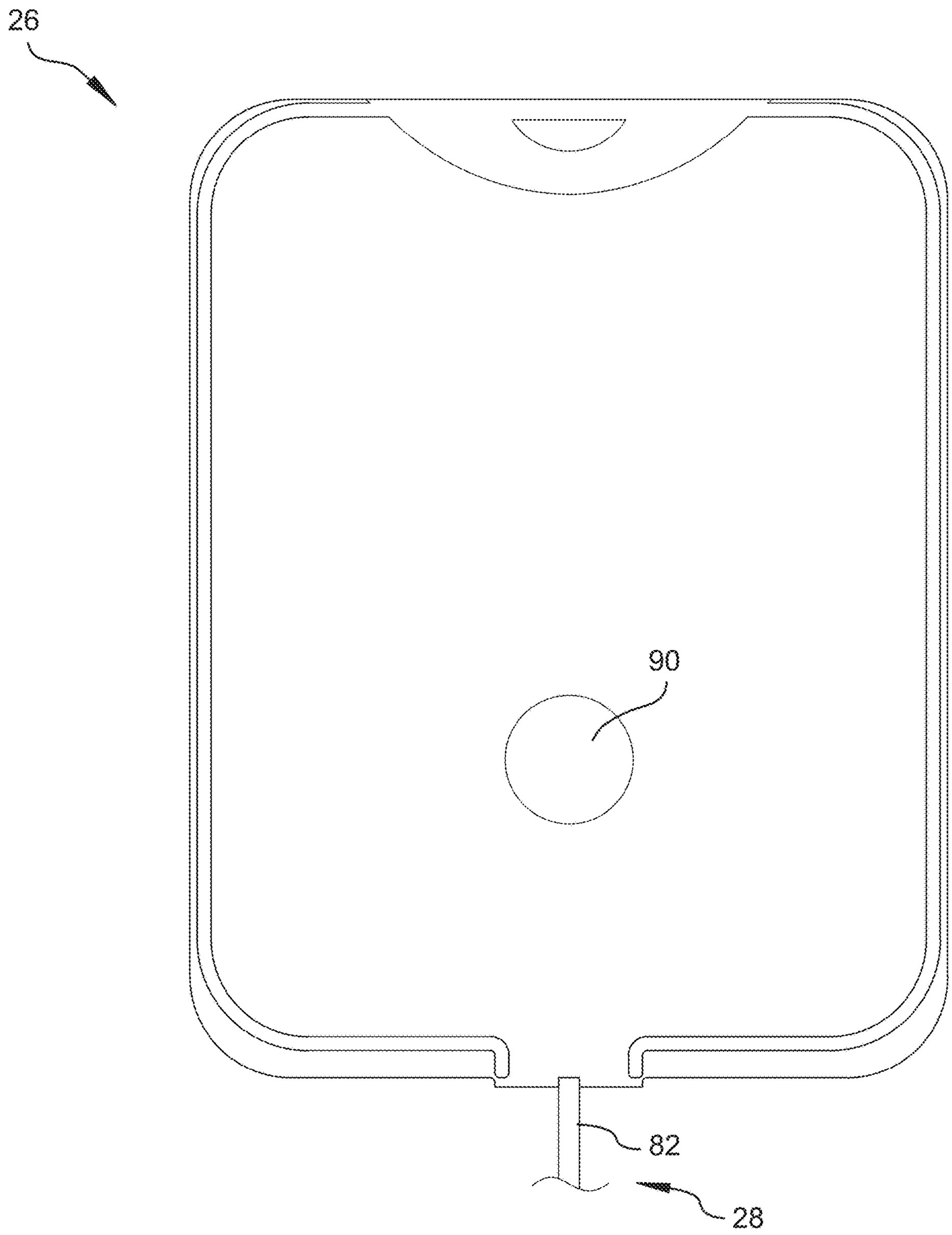

FIG. 21

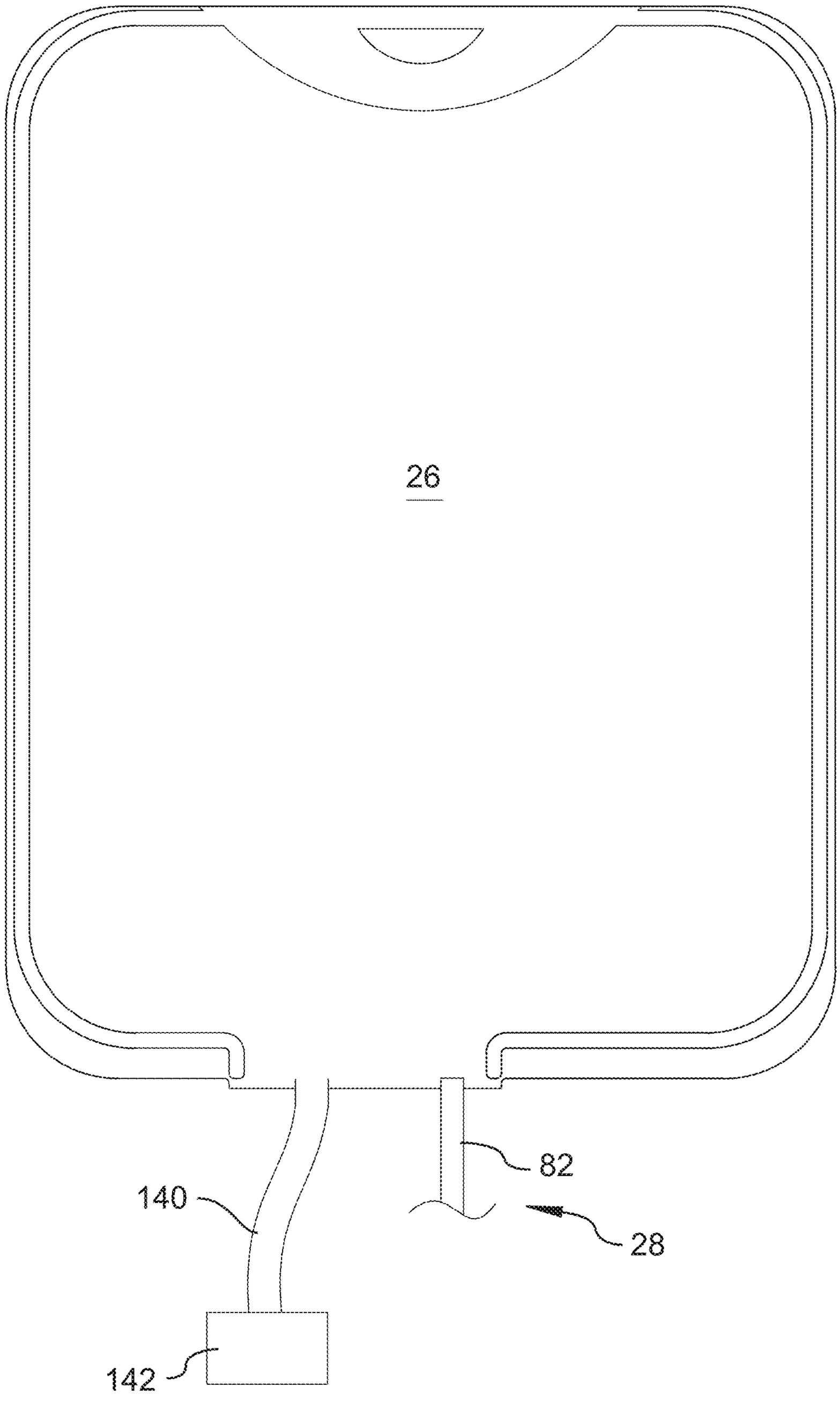

FIG. 22A

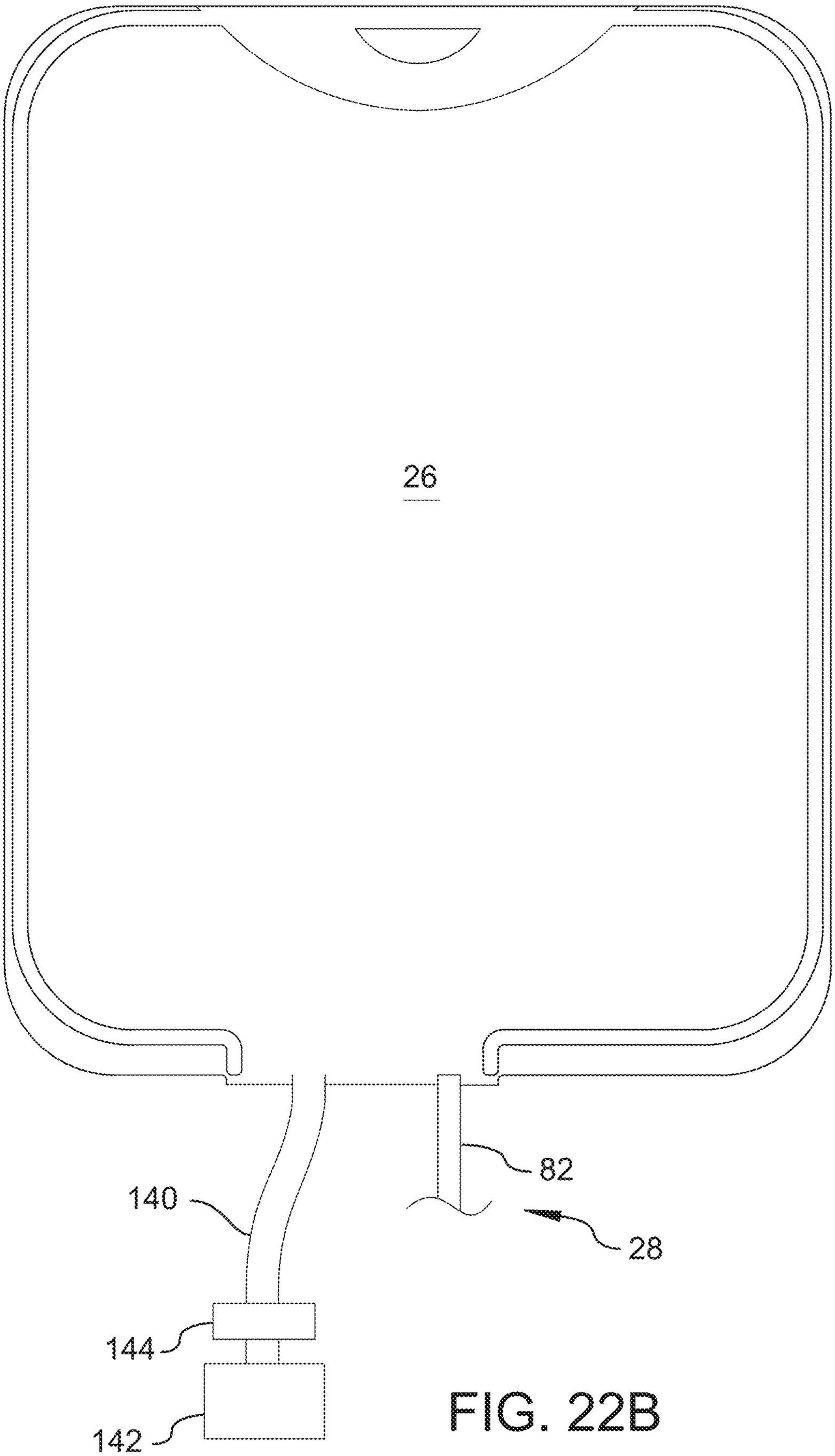

FIG. 22B

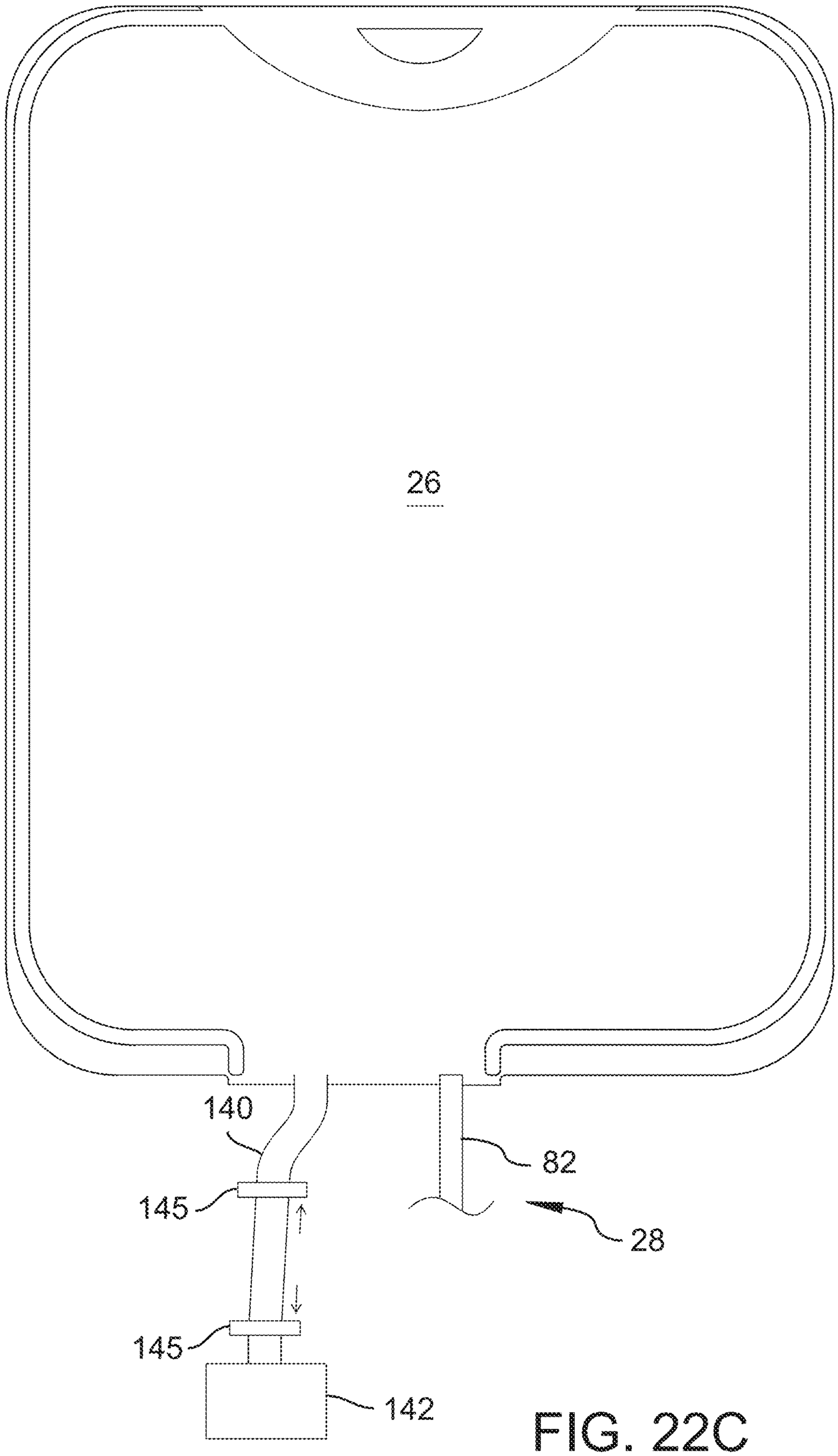

FIG. 22C

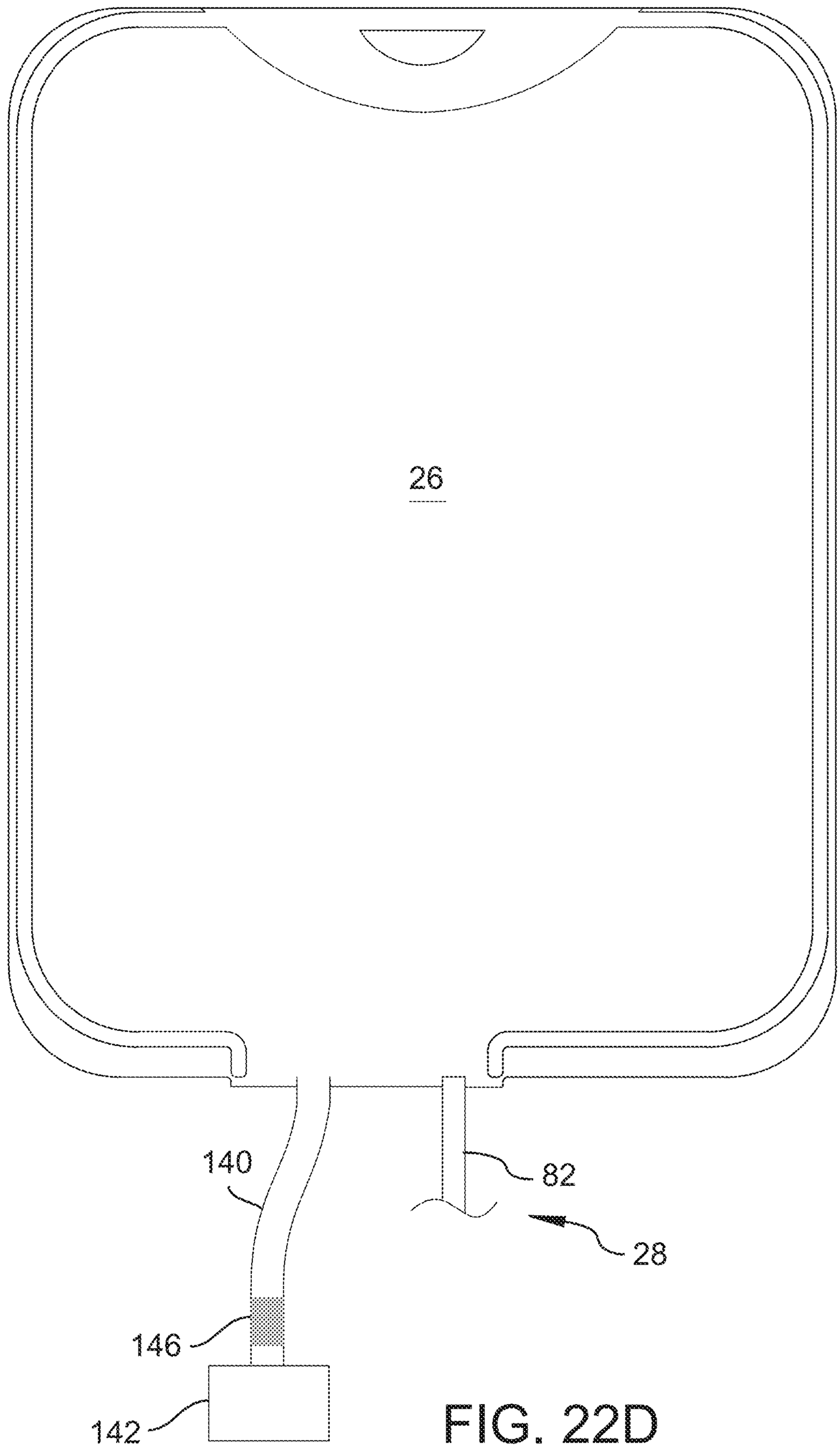

FIG. 22D

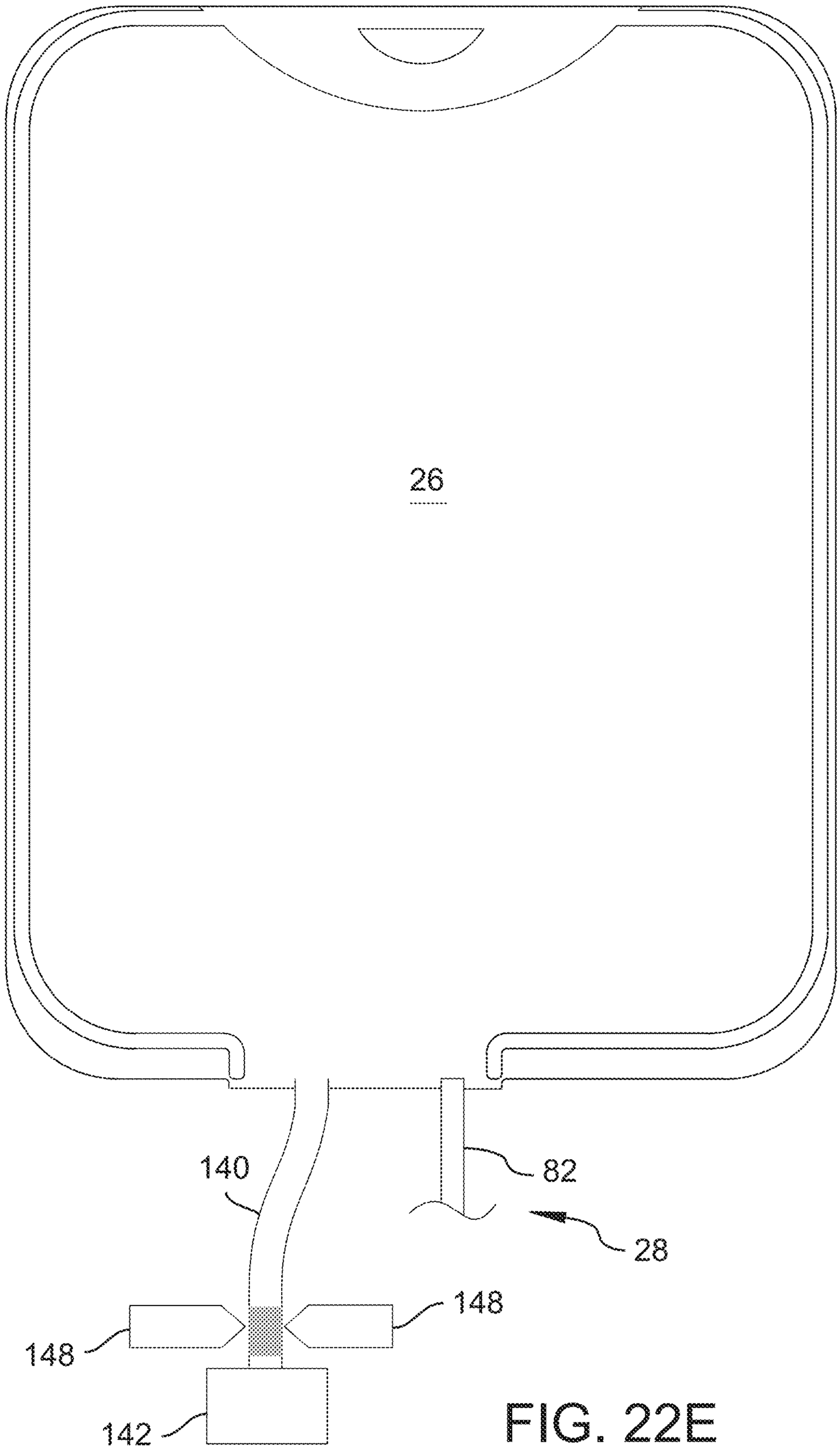

FIG. 22E

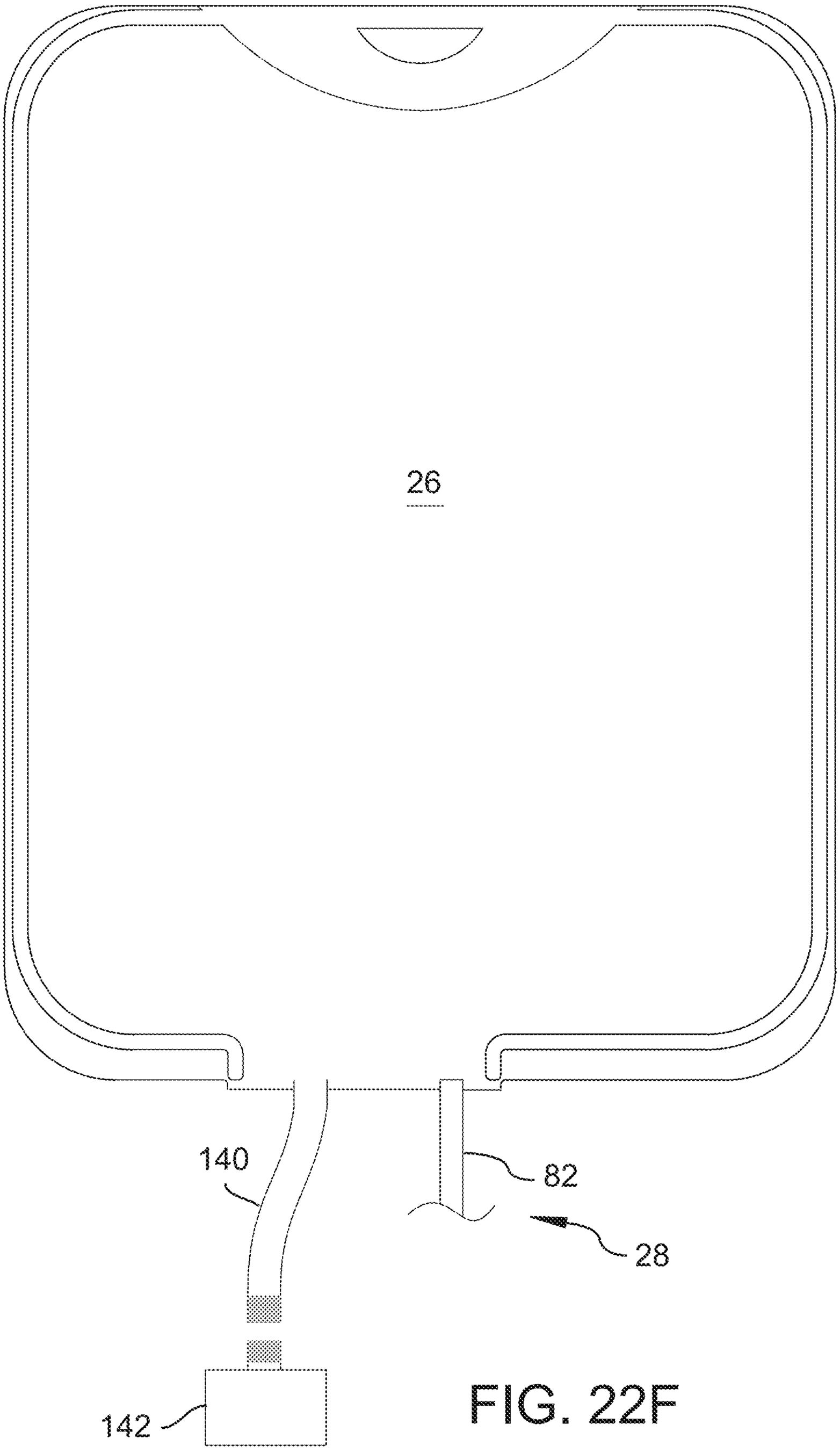

FIG. 22F

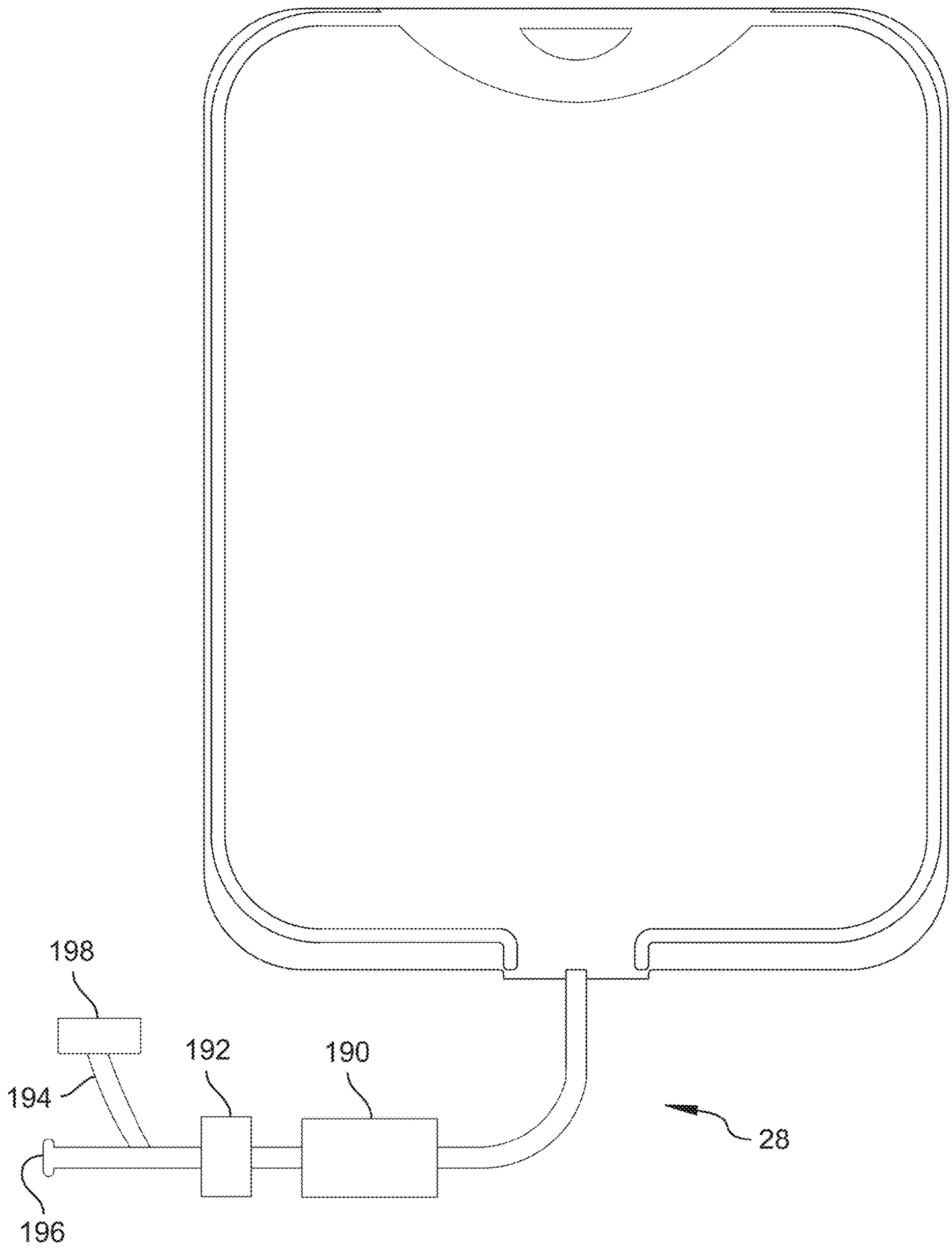

FIG. 23

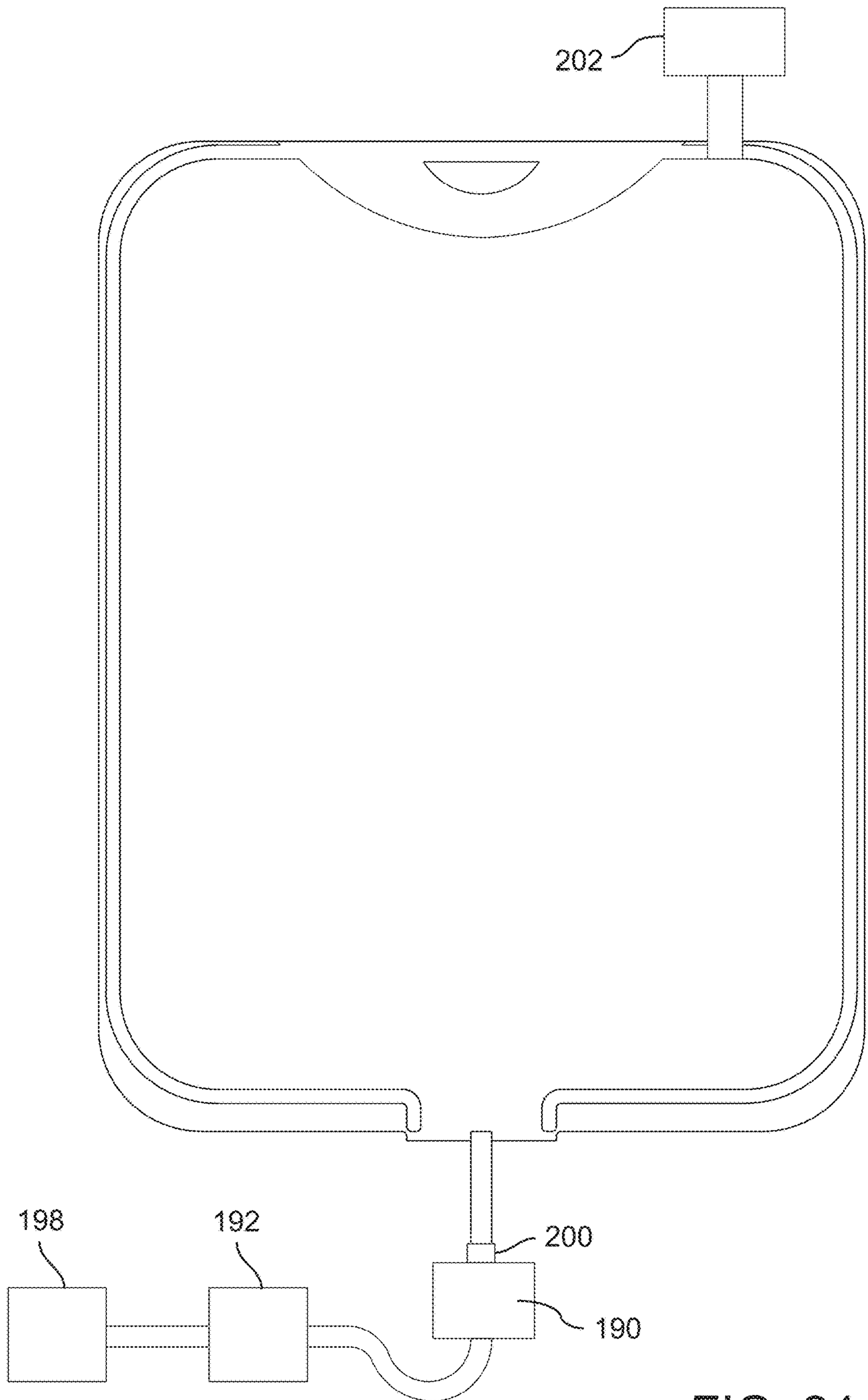

FIG. 24

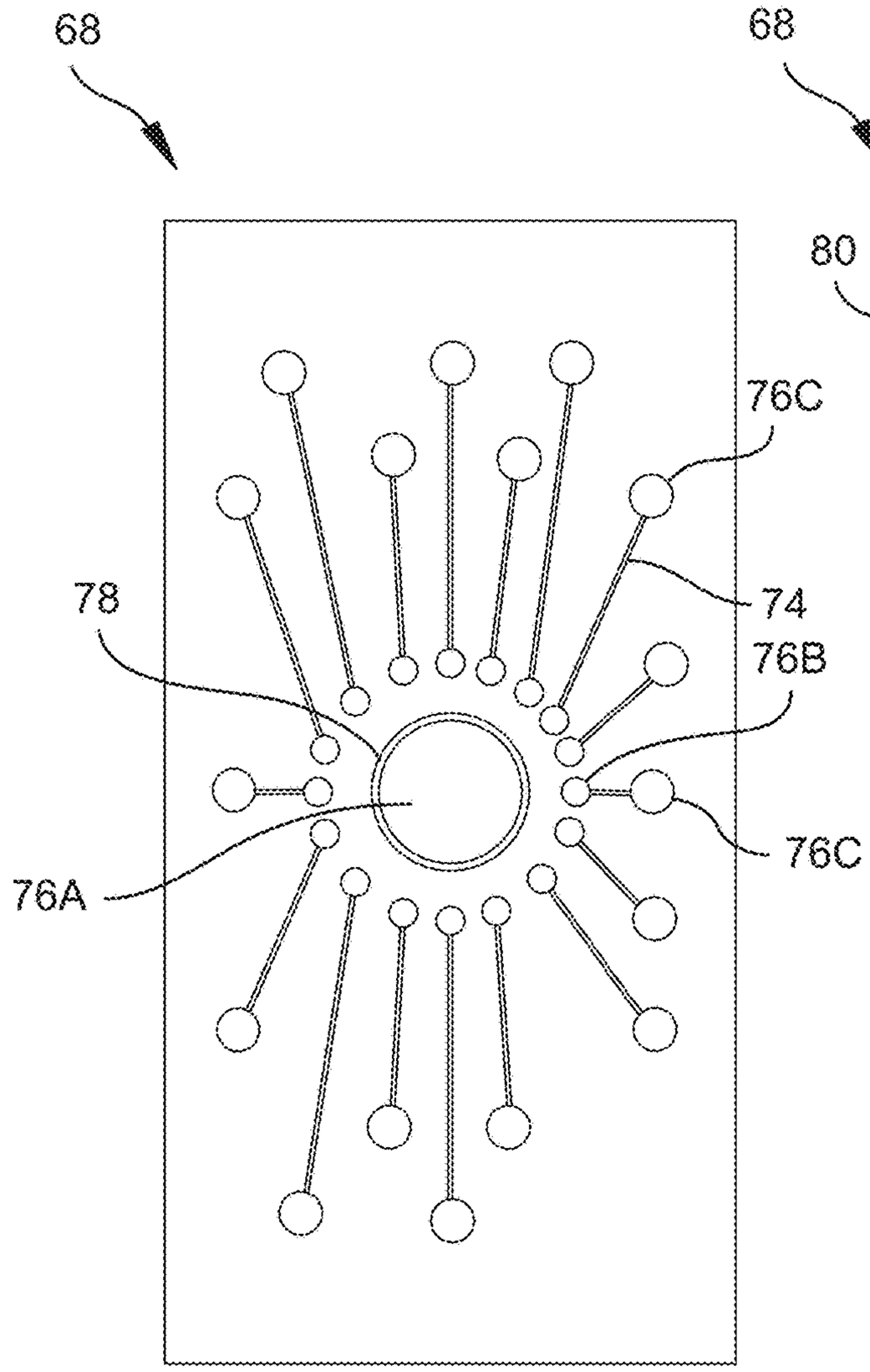

FIG. 25A

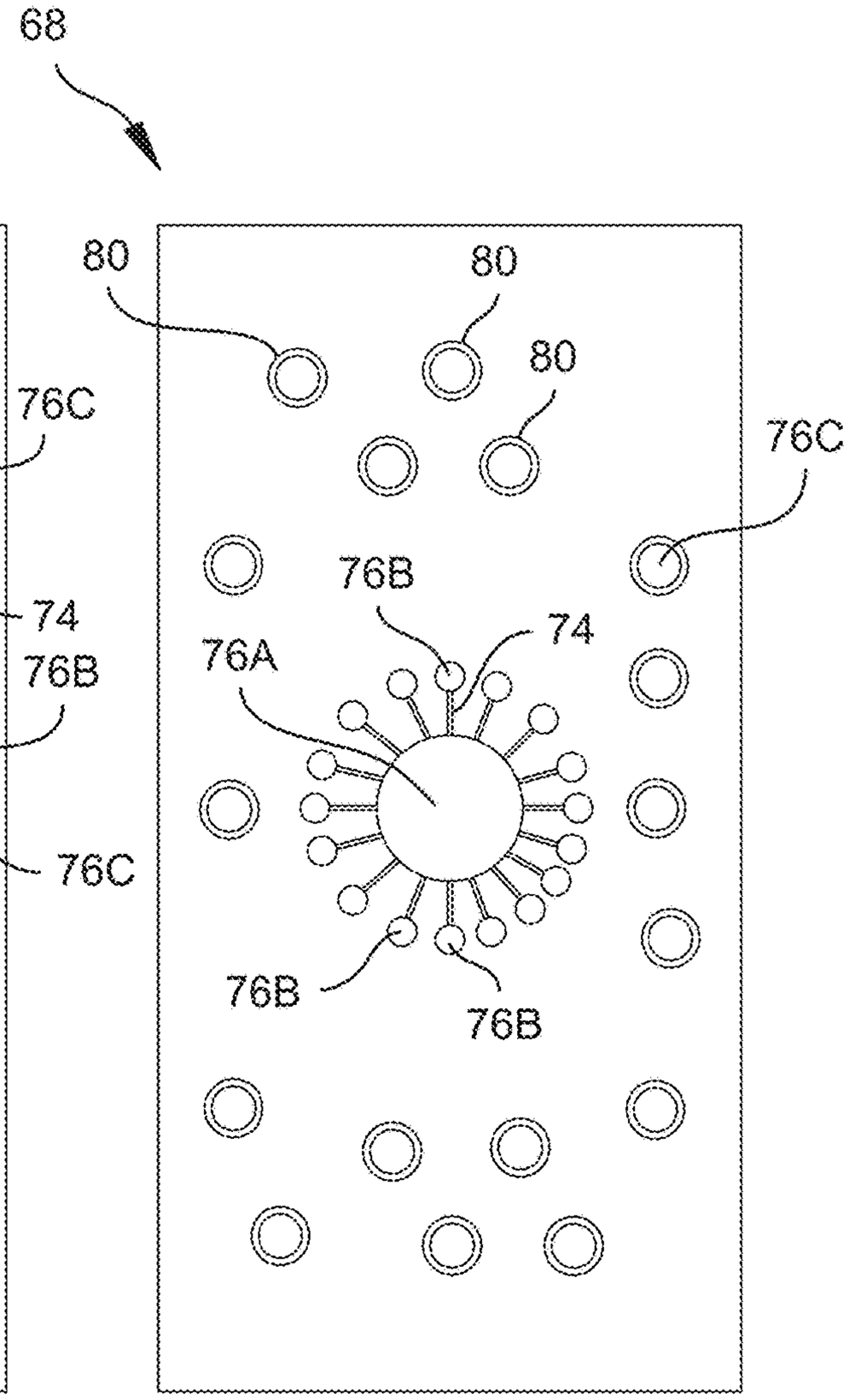

FIG. 25B

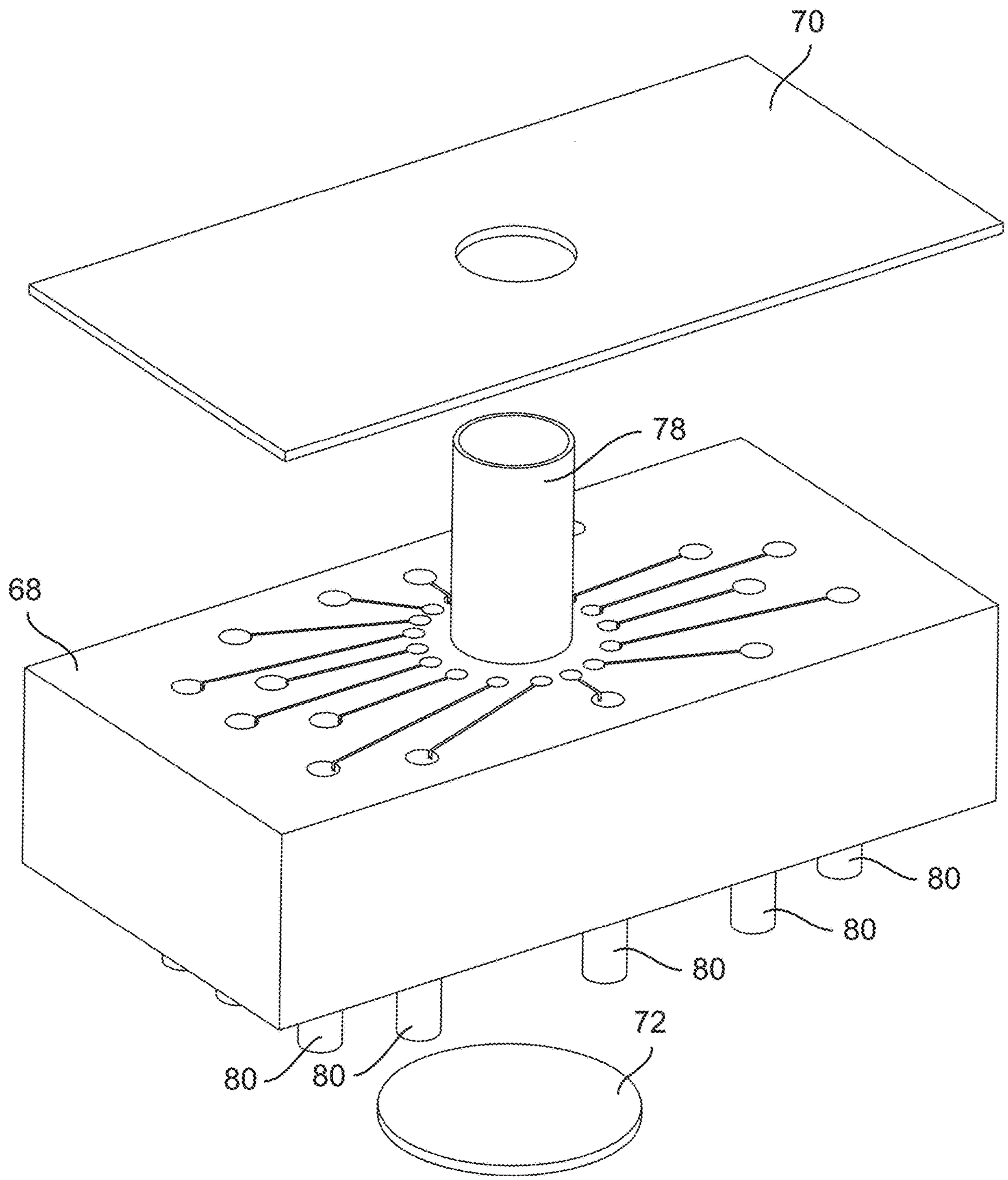

FIG. 25C

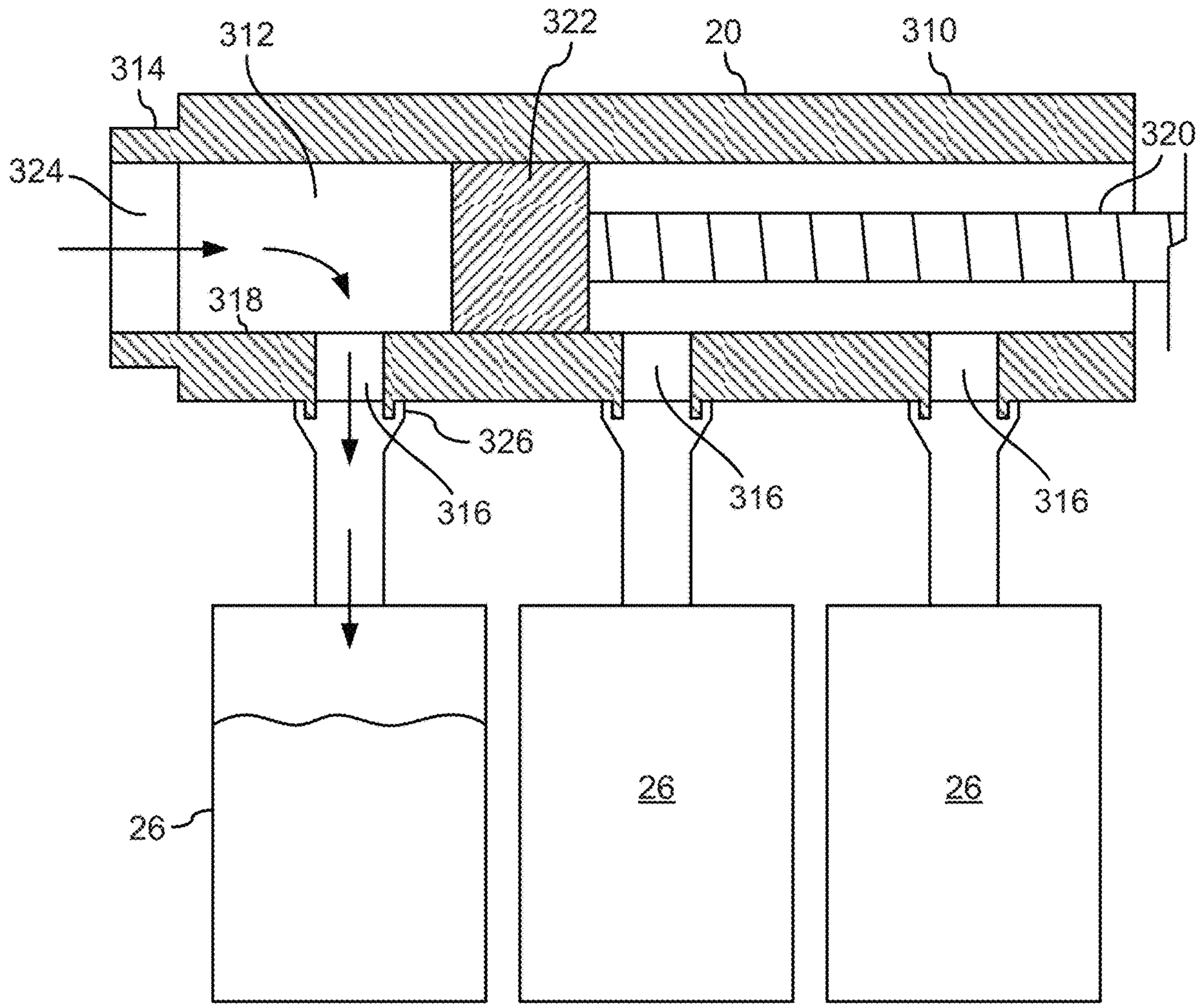

FIG. 26

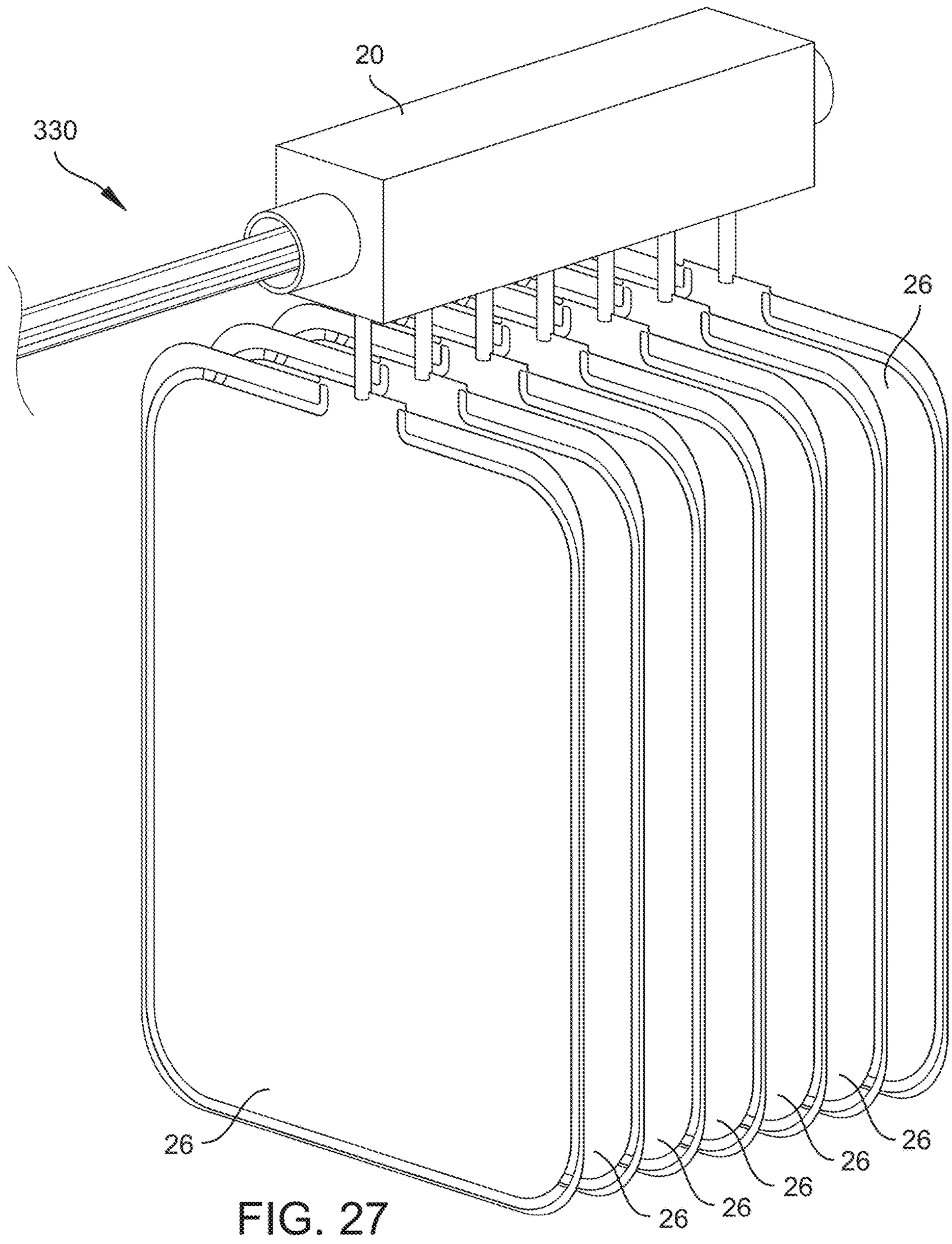

FIG. 27

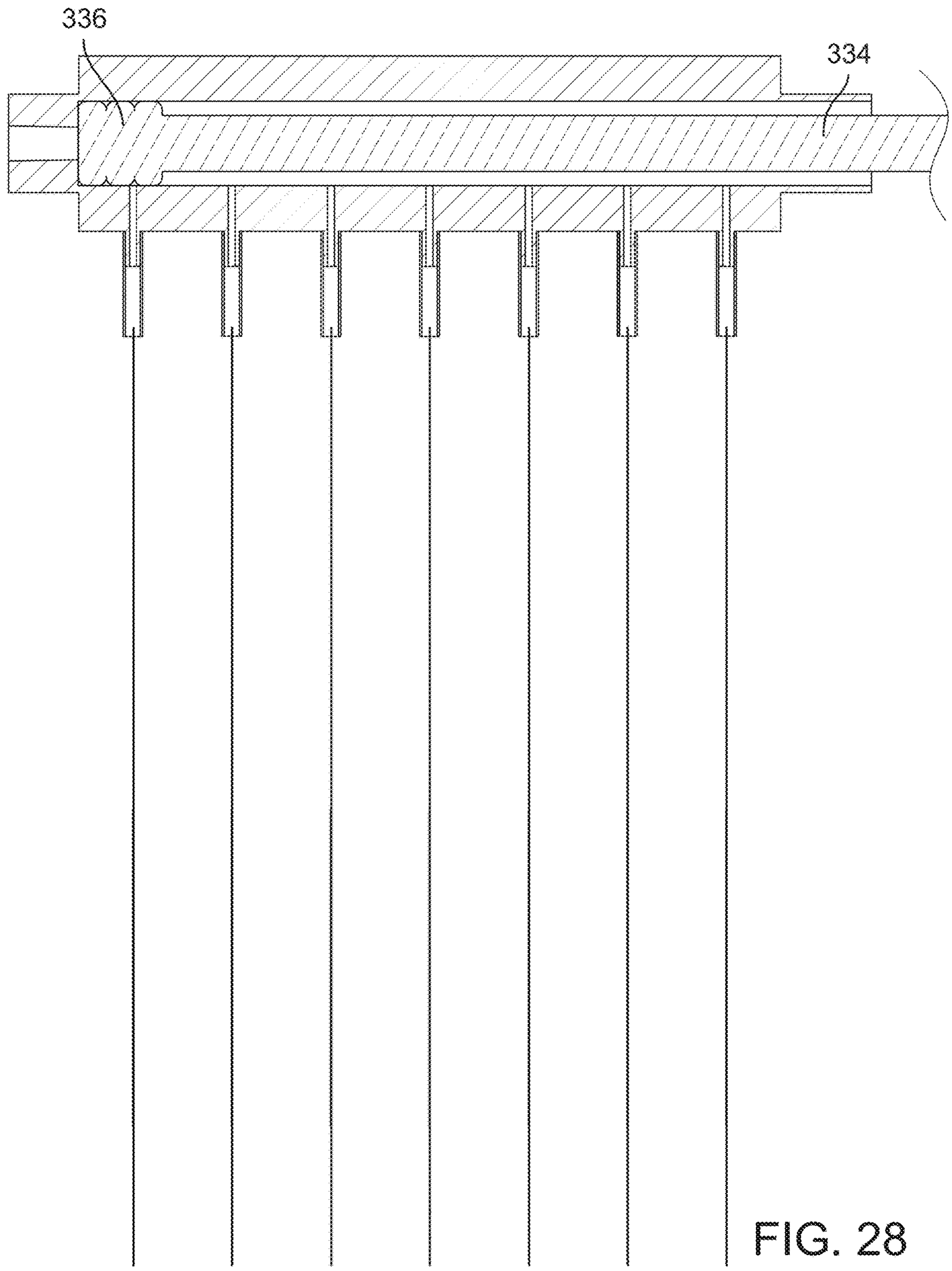

FIG. 28

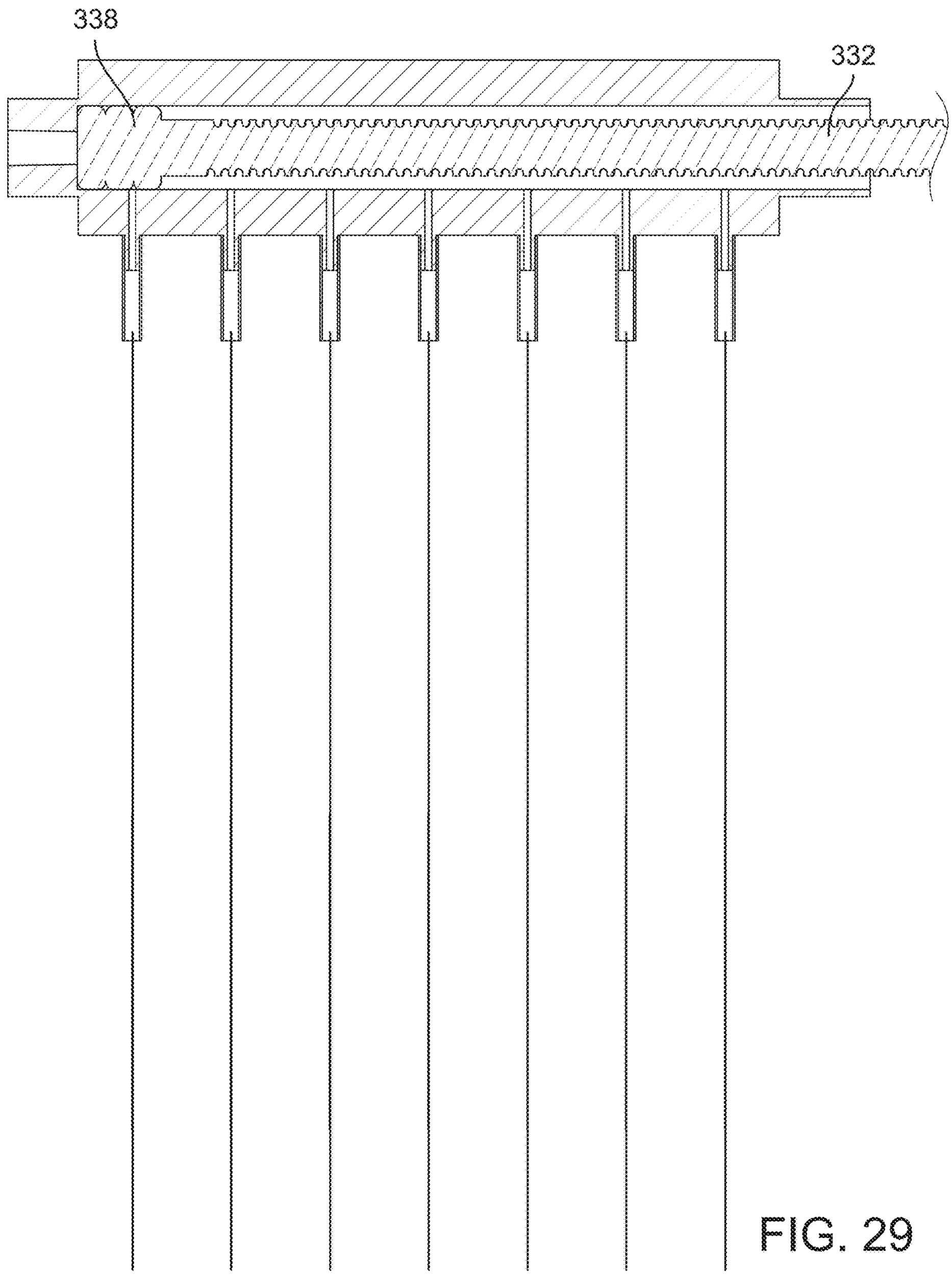

FIG. 29

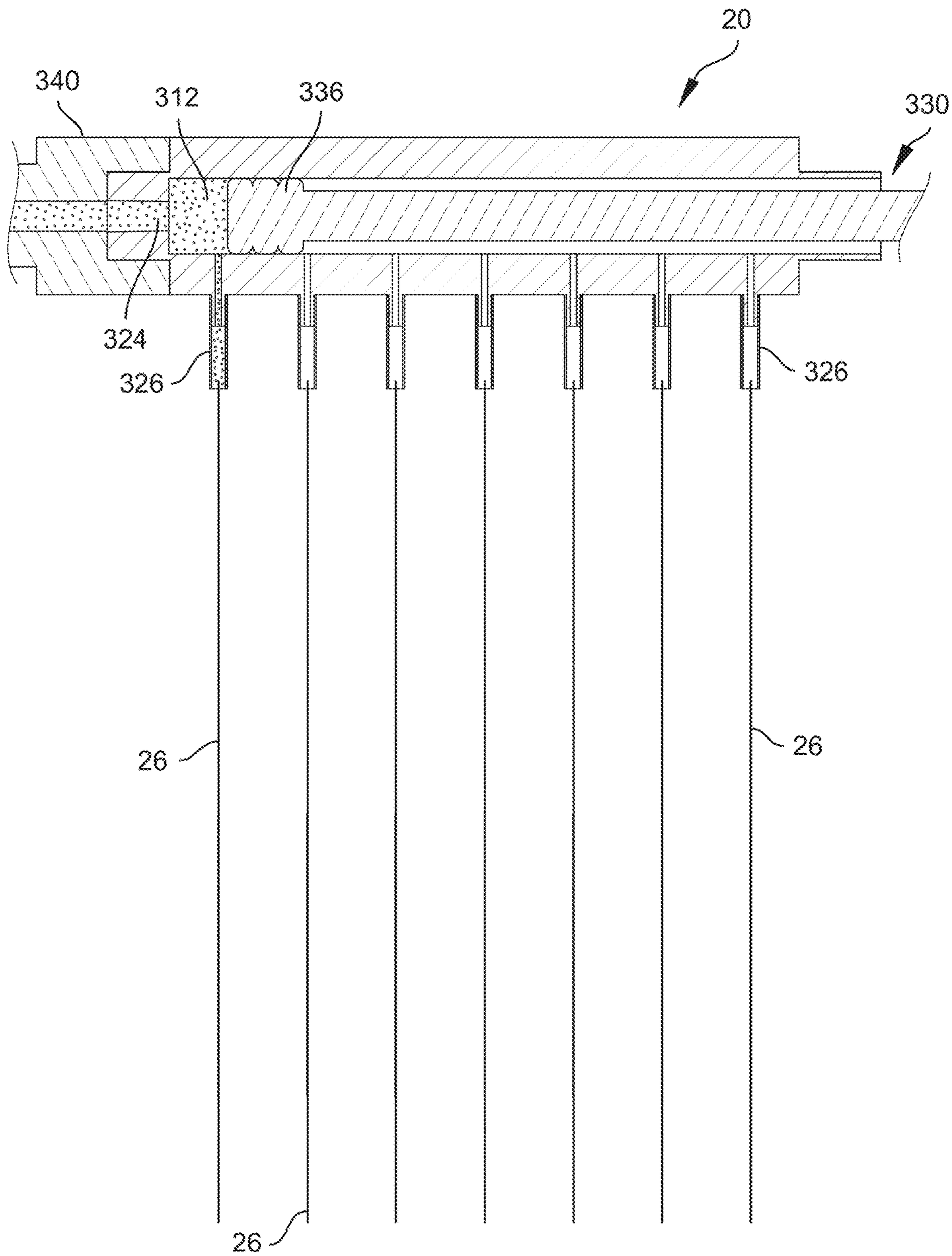

FIG. 30

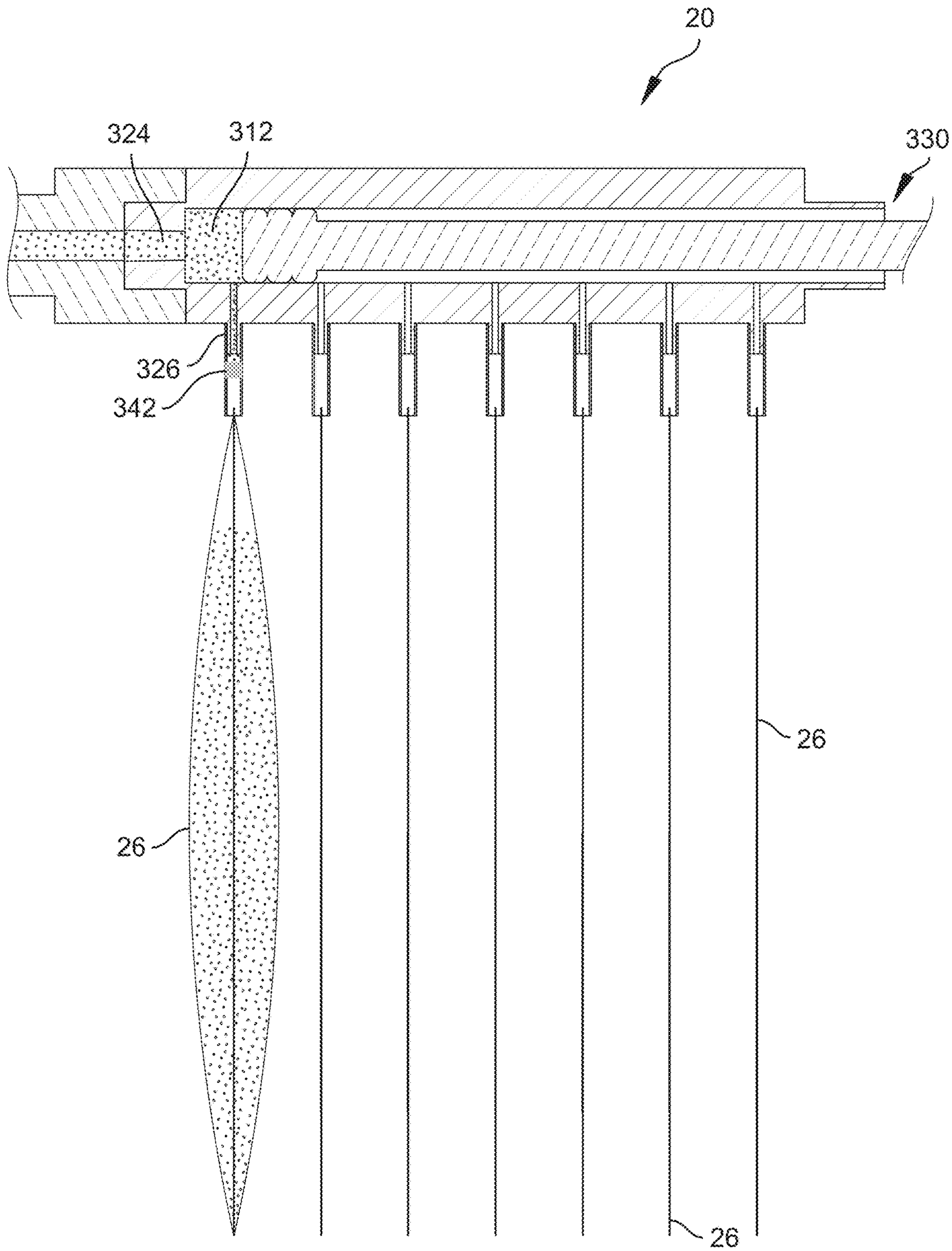

FIG. 31

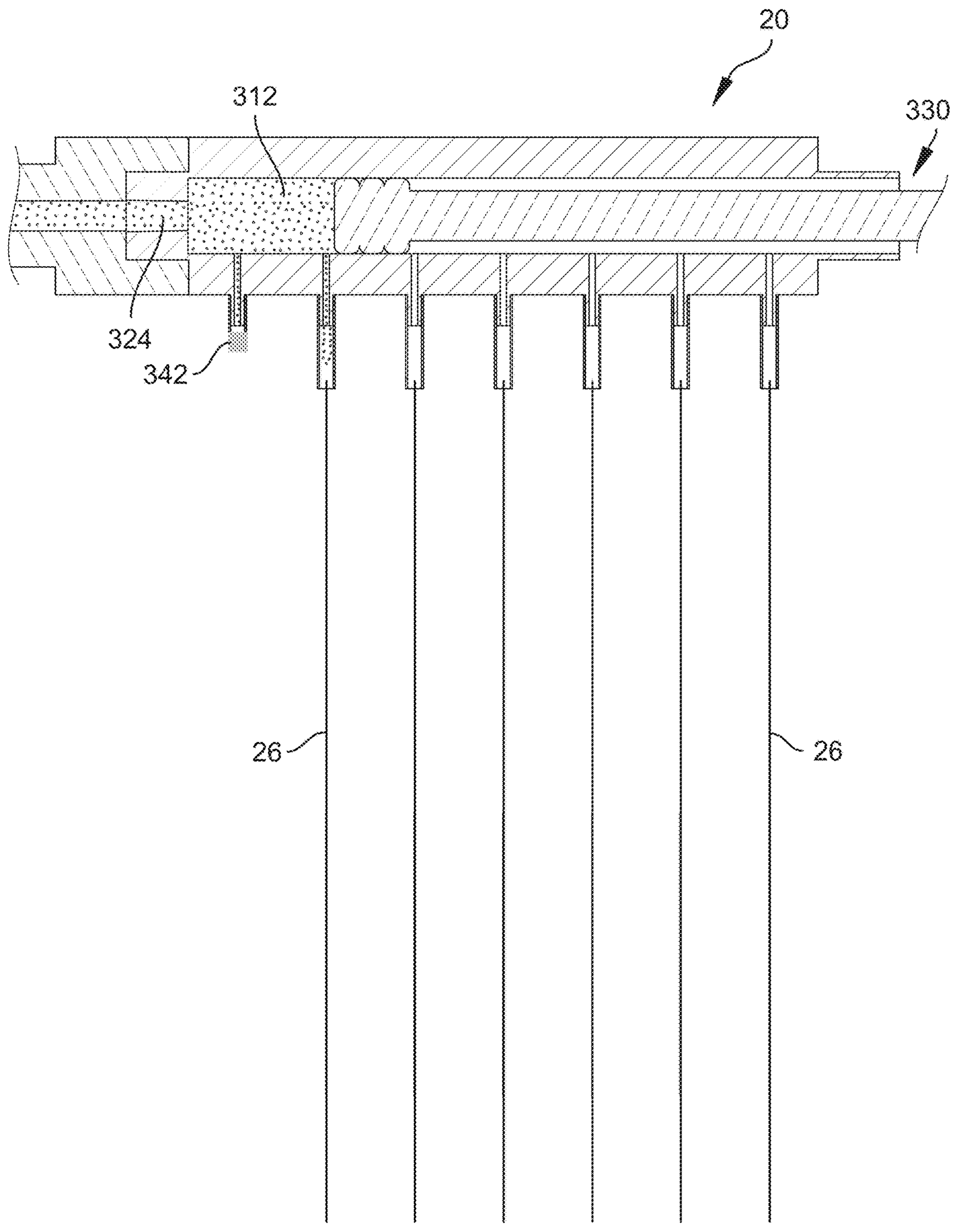

FIG. 32

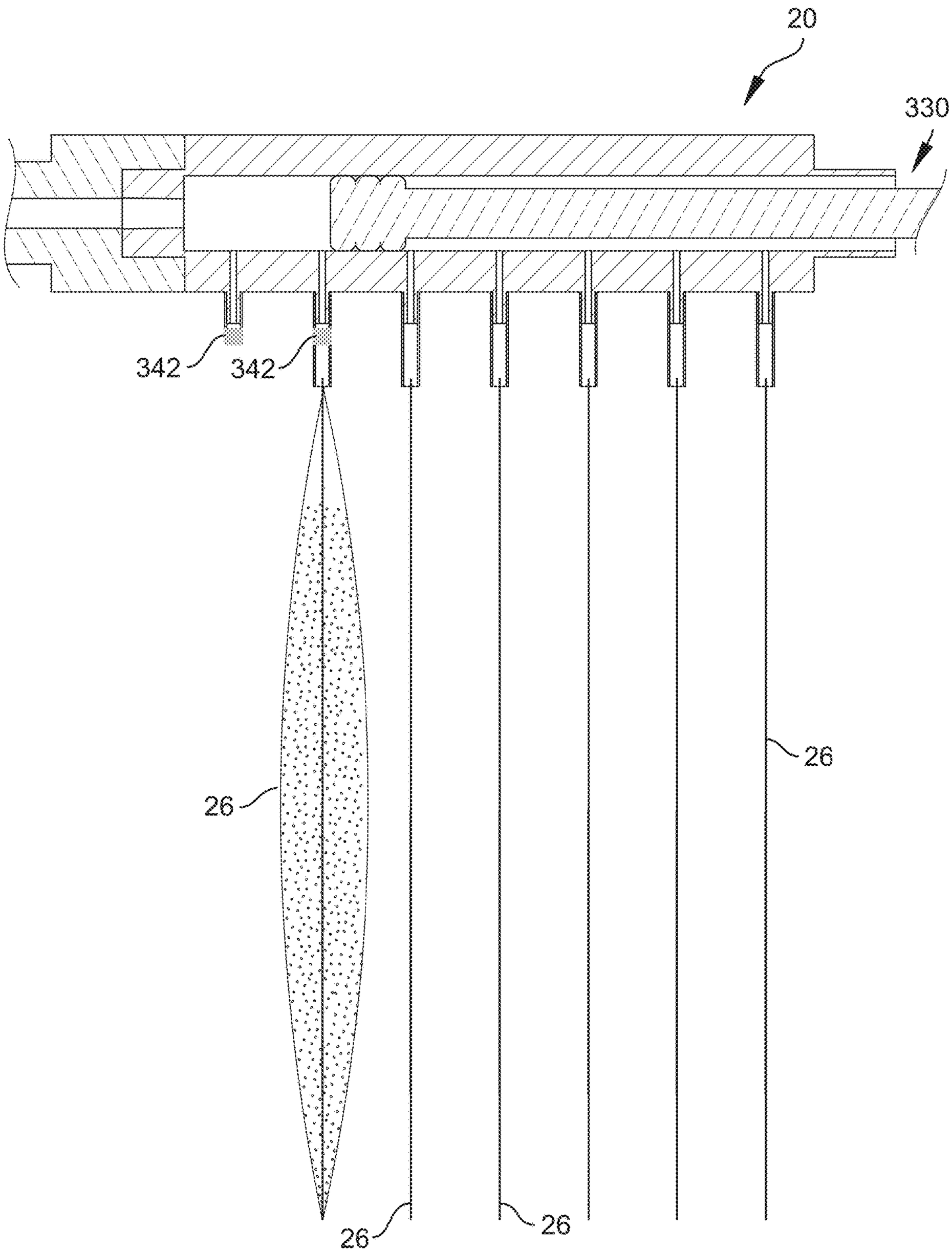

FIG. 33

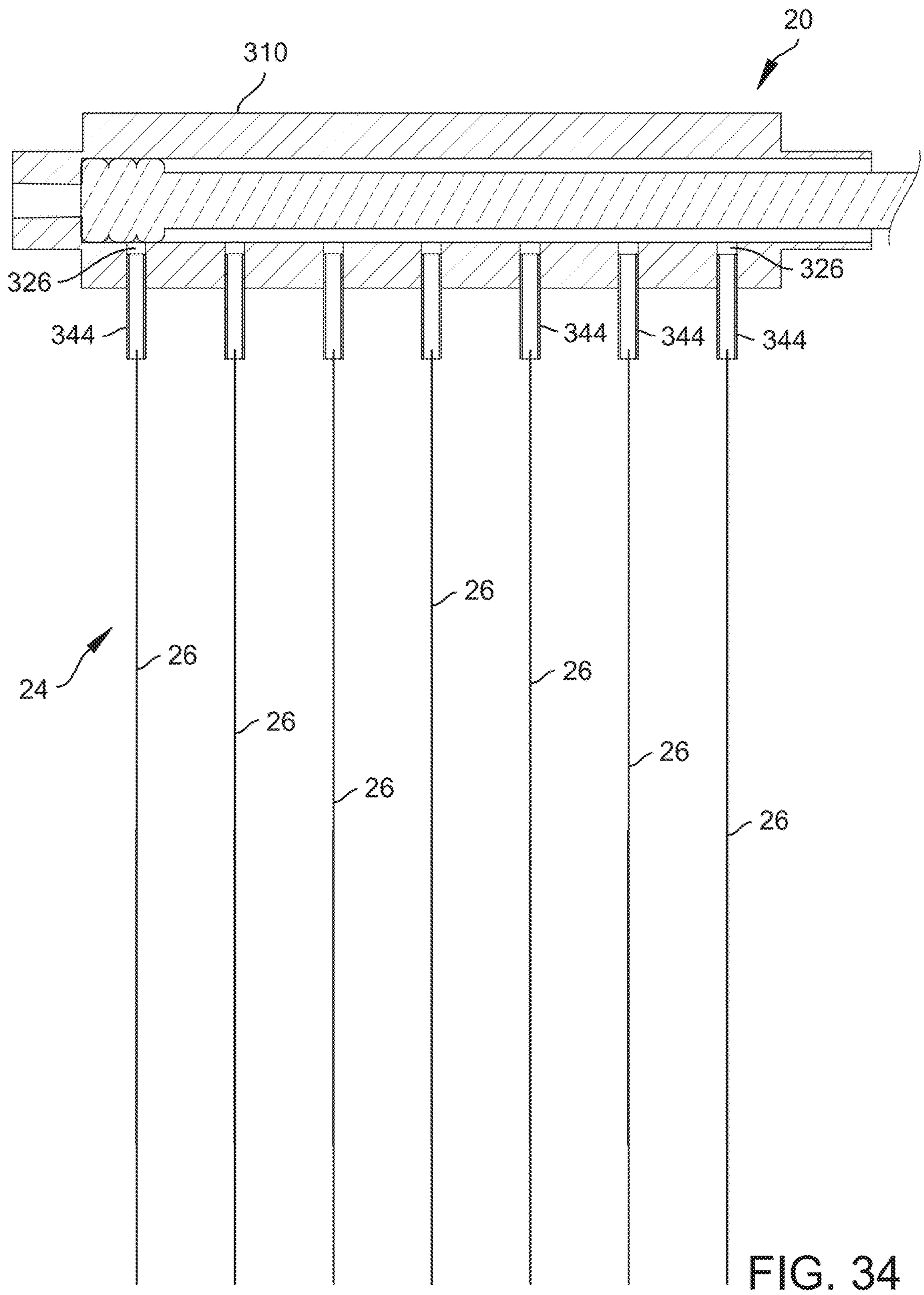

FIG. 34

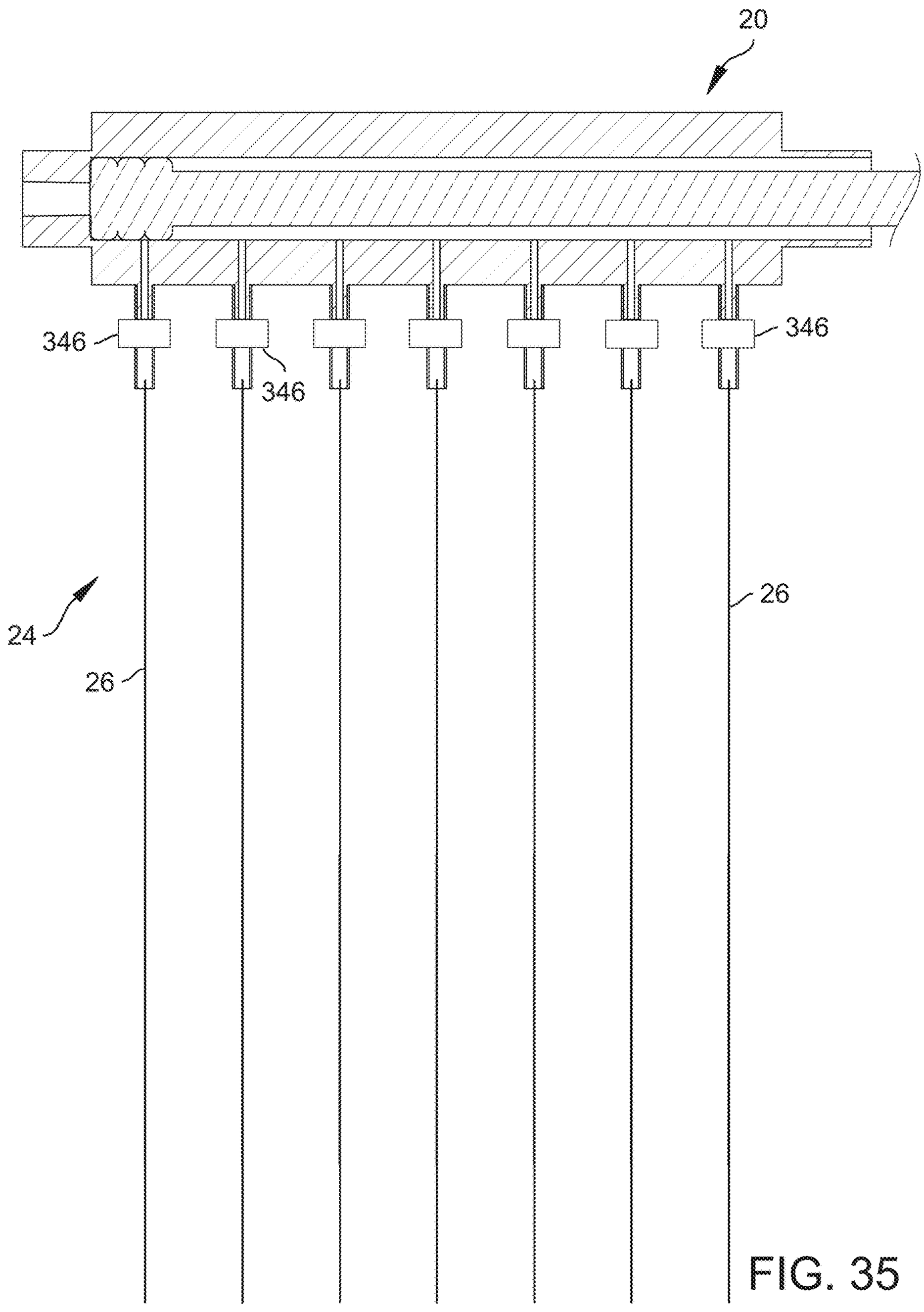

FIG. 35

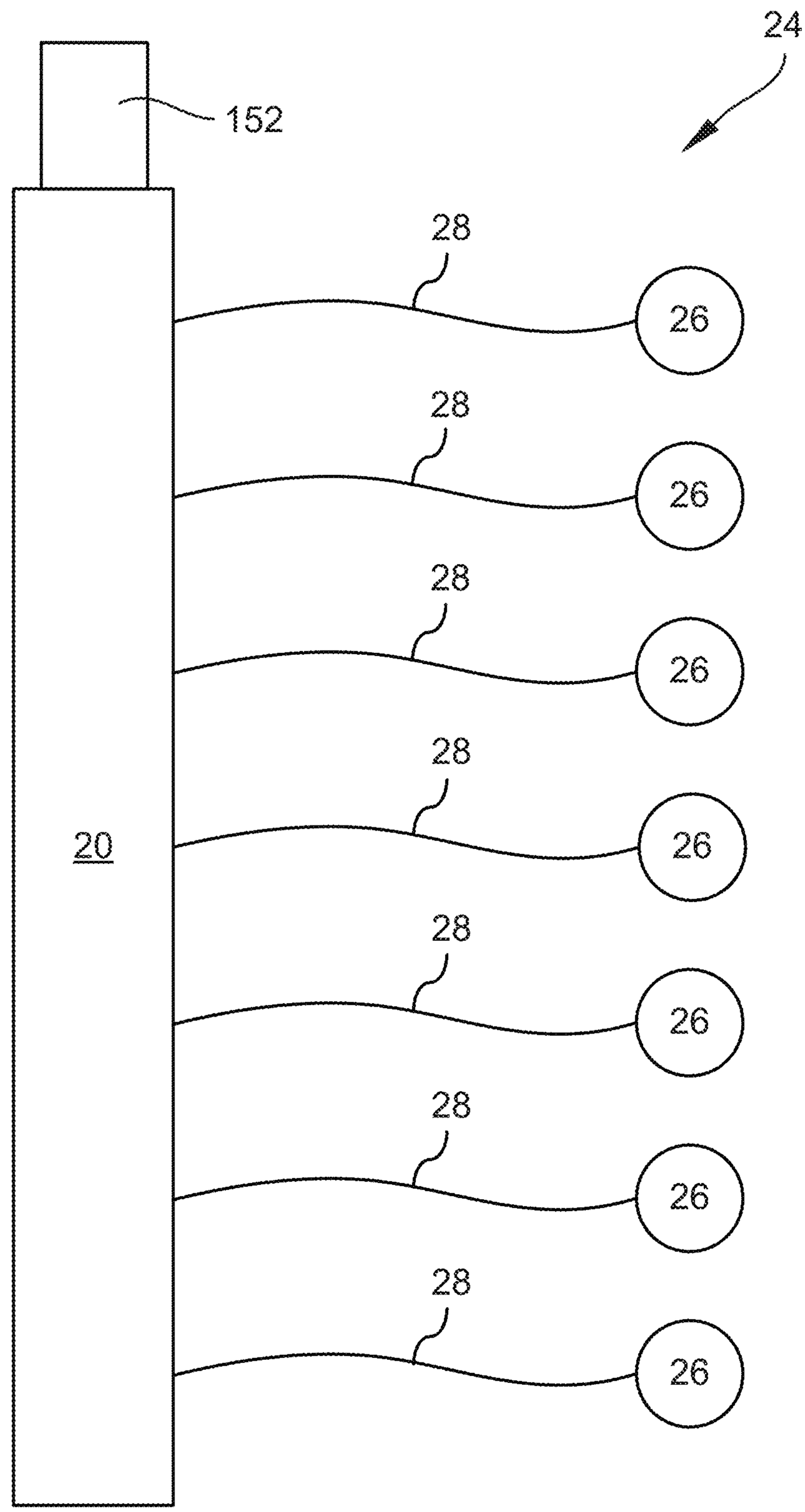

FIG. 36

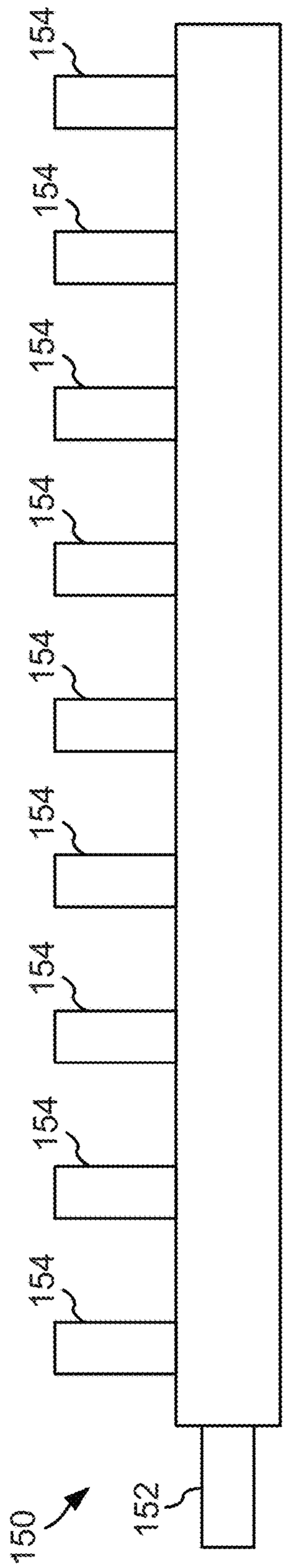

FIG. 37

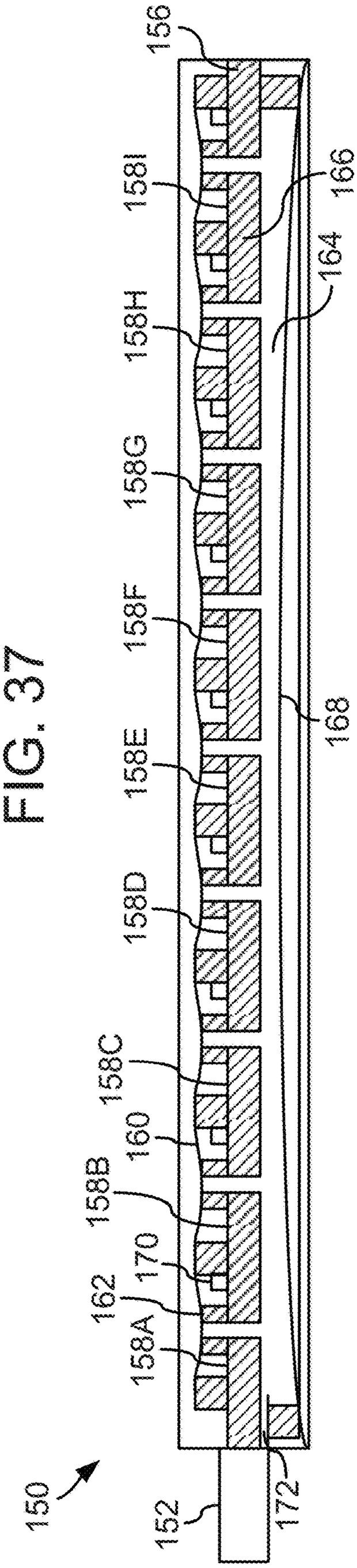

FIG. 38

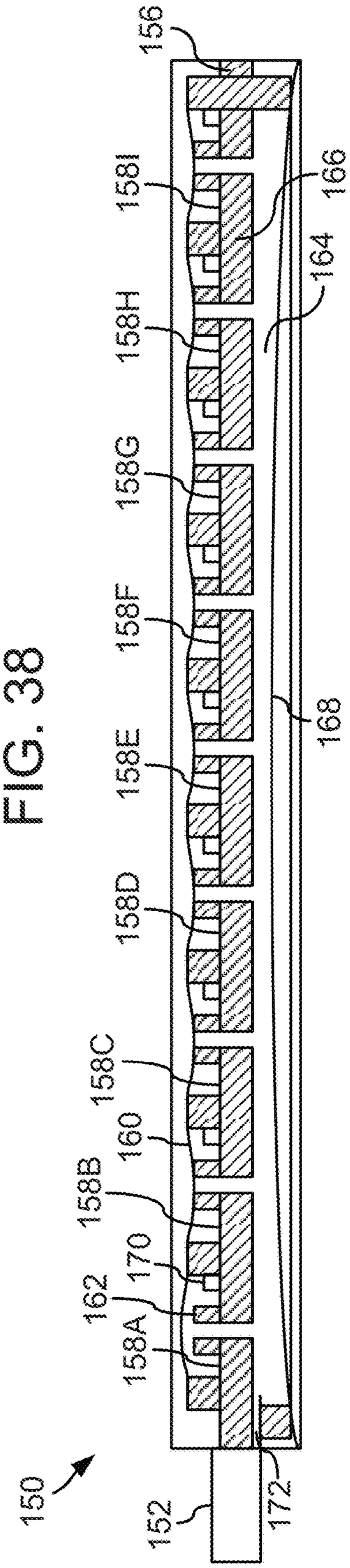

FIG. 39A

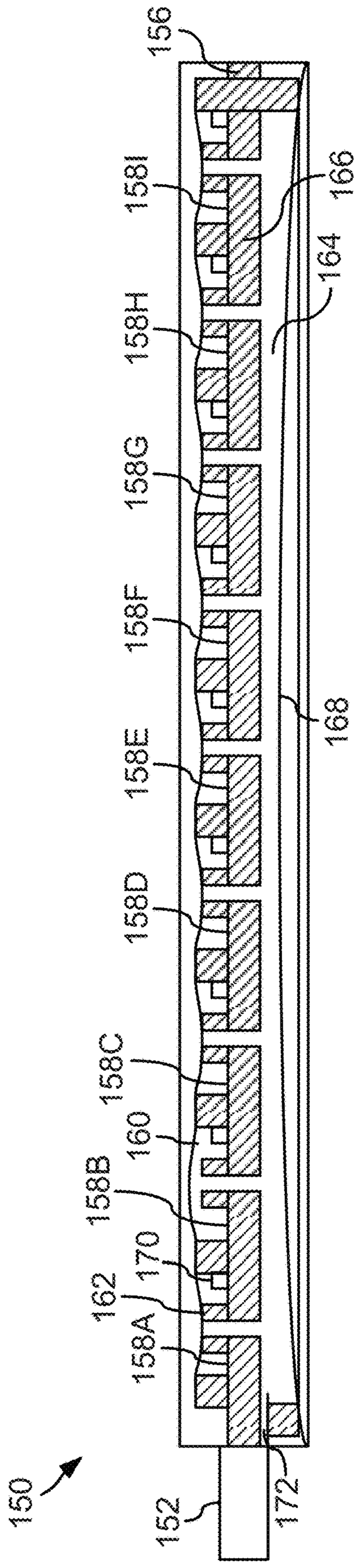

FIG. 39B

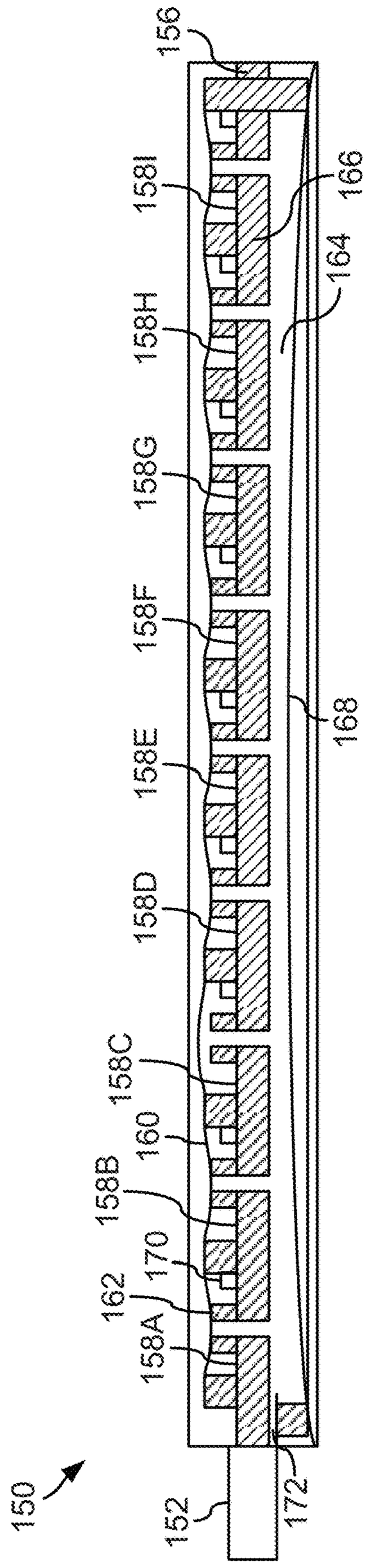

FIG. 39C

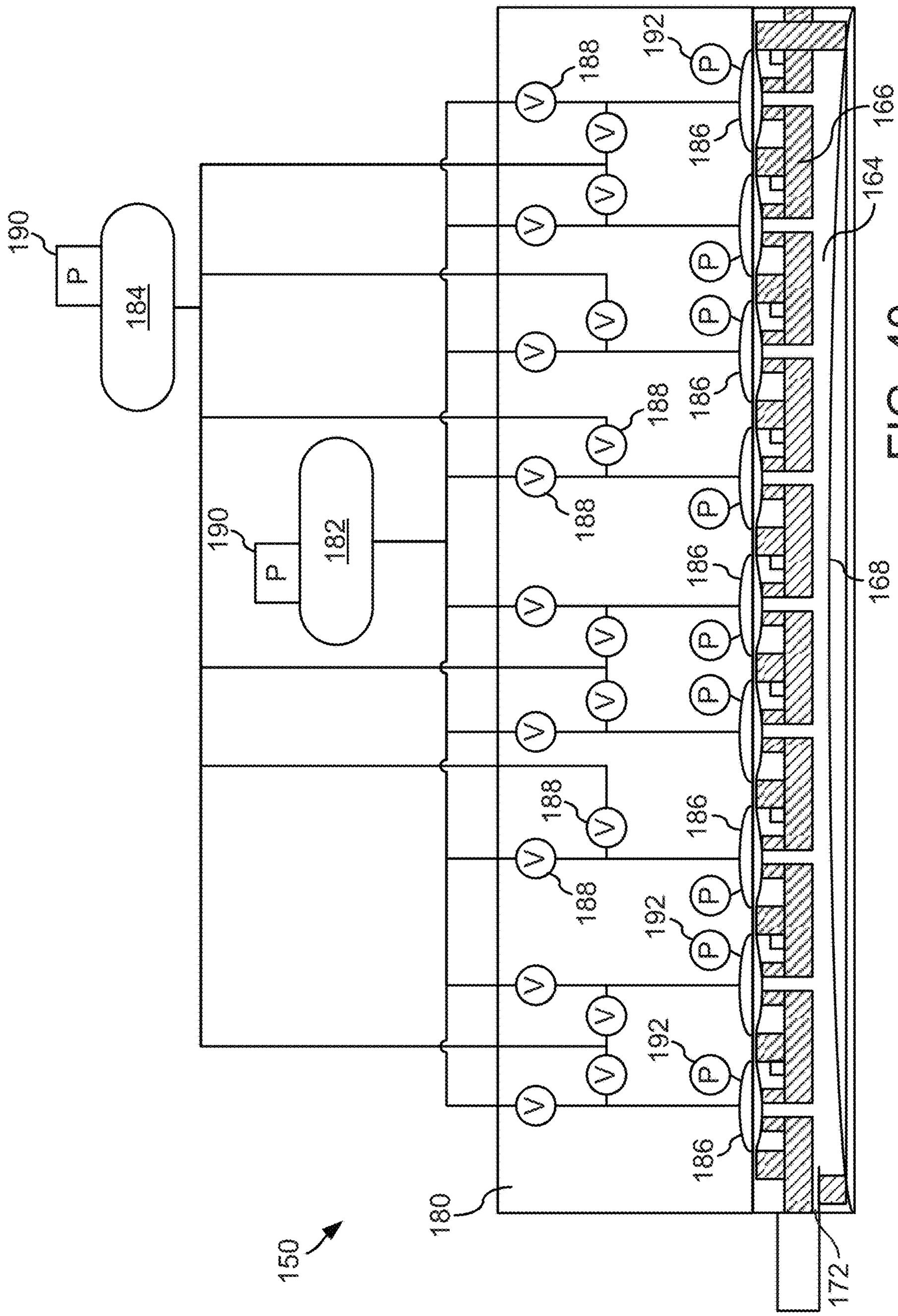

FIG. 40

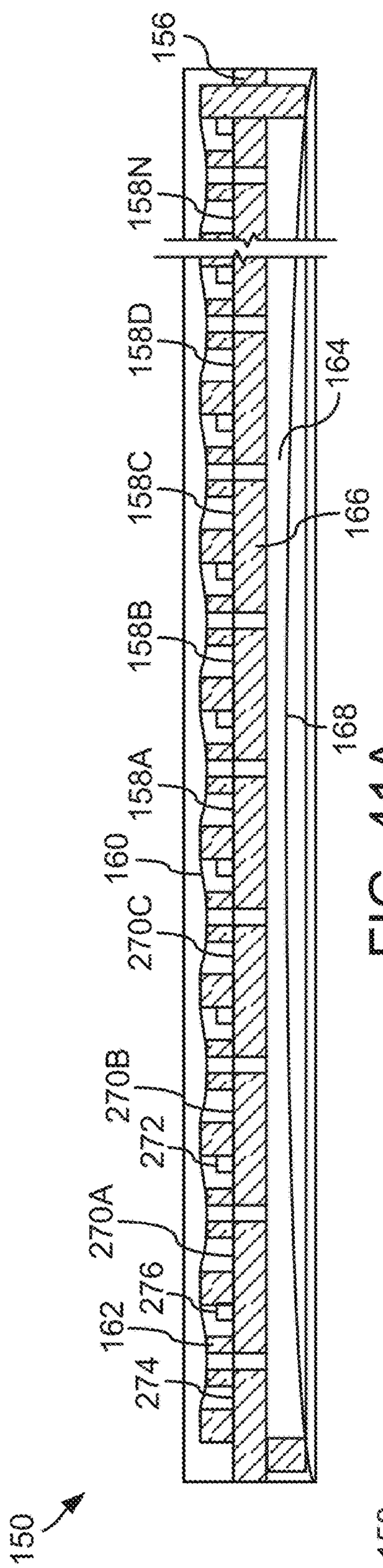

FIG. 41A

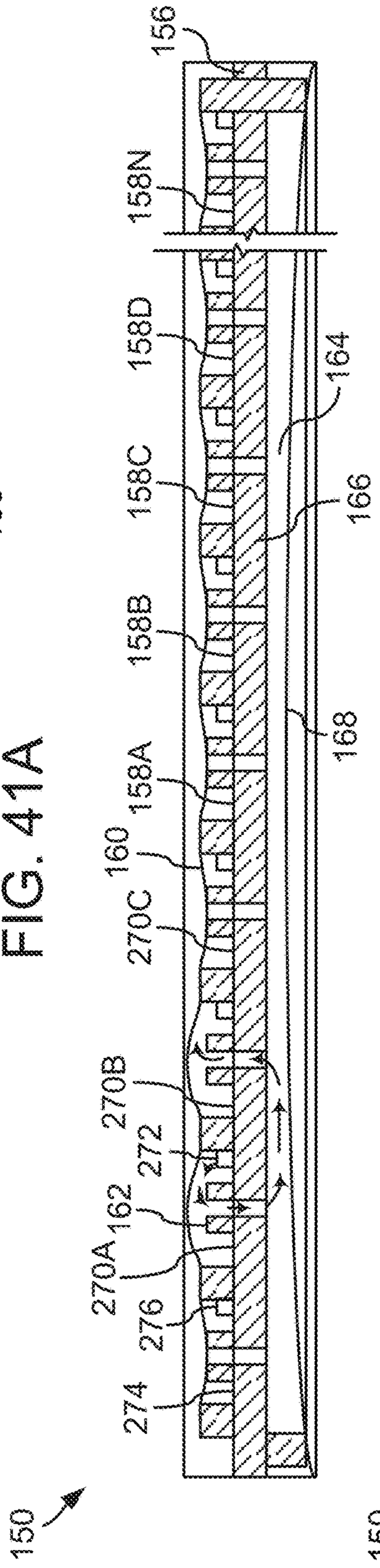

FIG. 41B

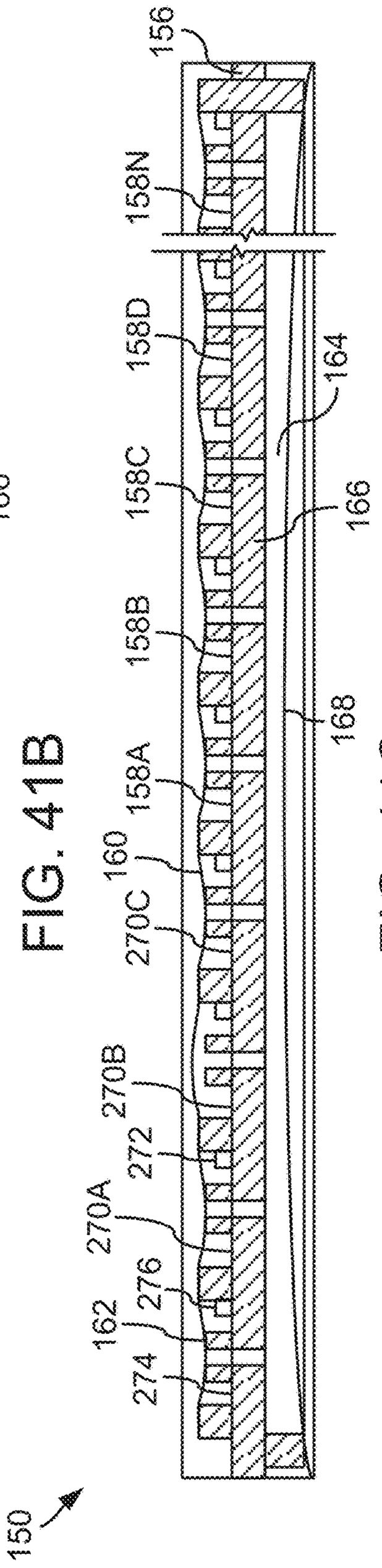

FIG. 41C

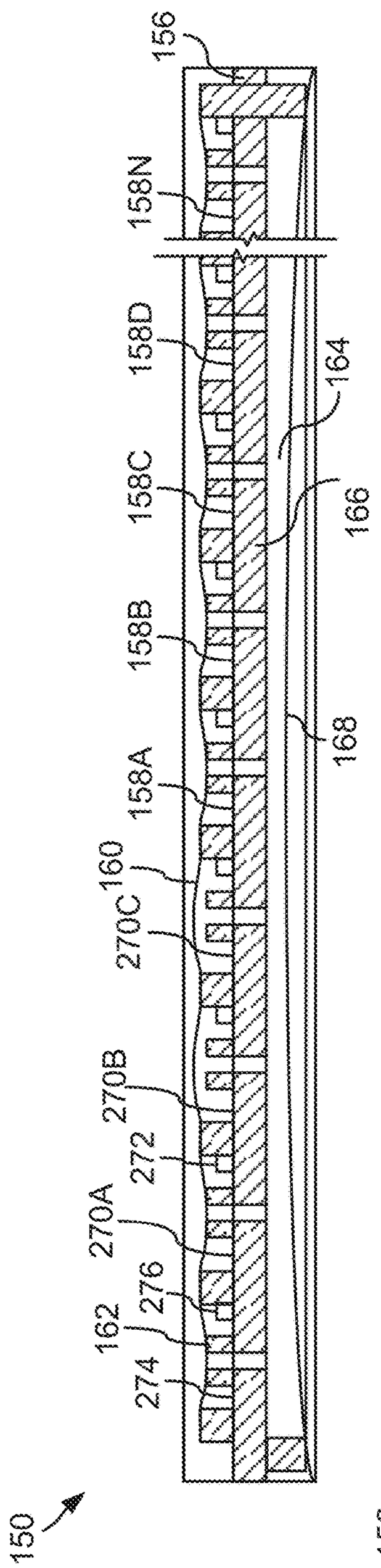

FIG. 41D

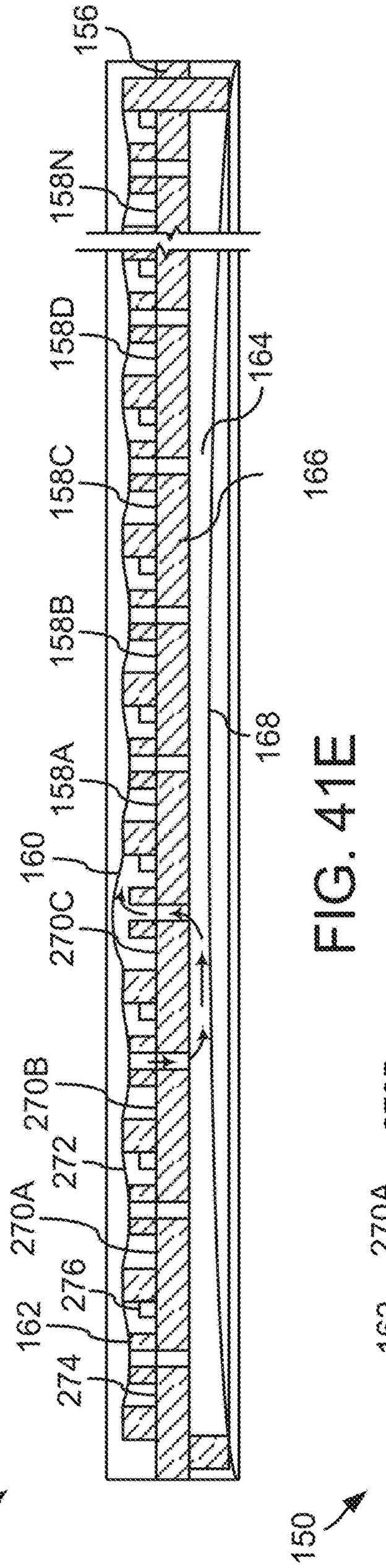

FIG. 41E

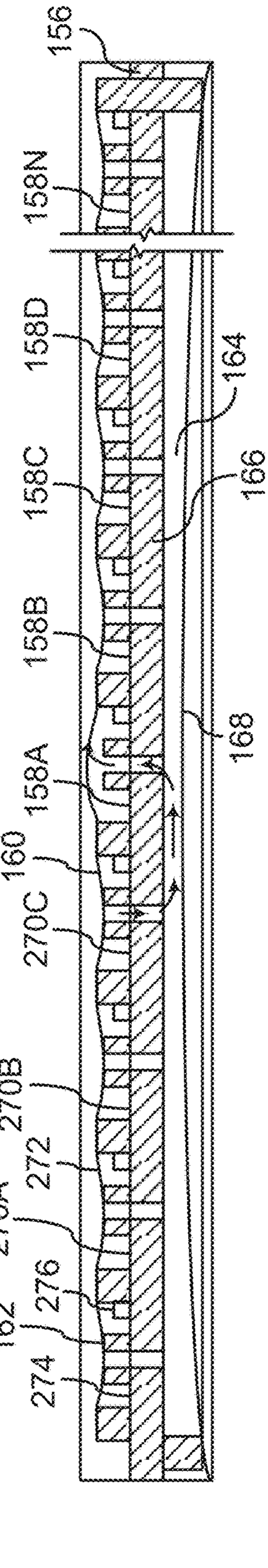

FIG. 41F

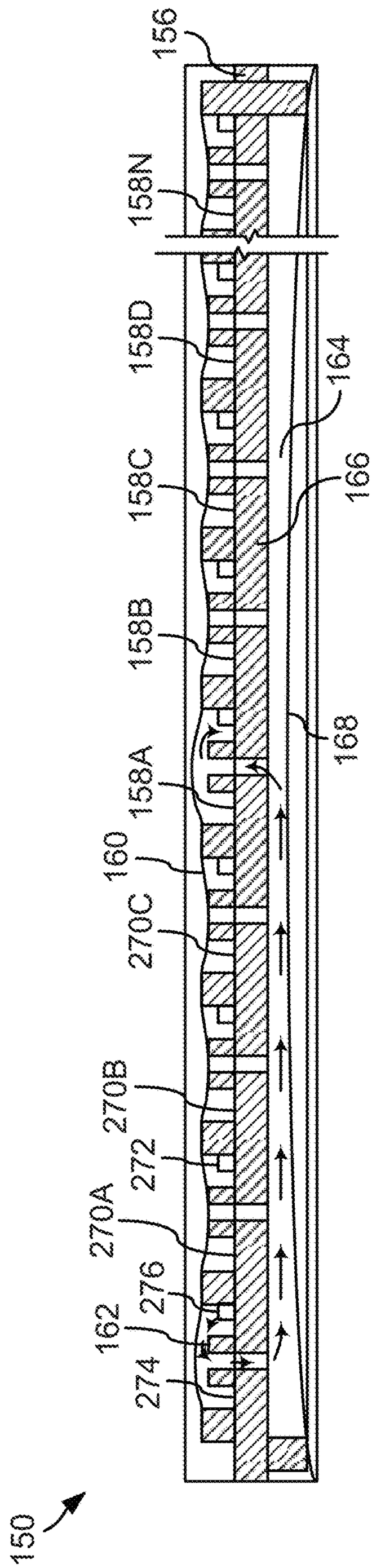
156
158N
158D
164
158C
166
158B
168
158A
160
270C
270B
272
270A
276
162
274
150

FIG. 42

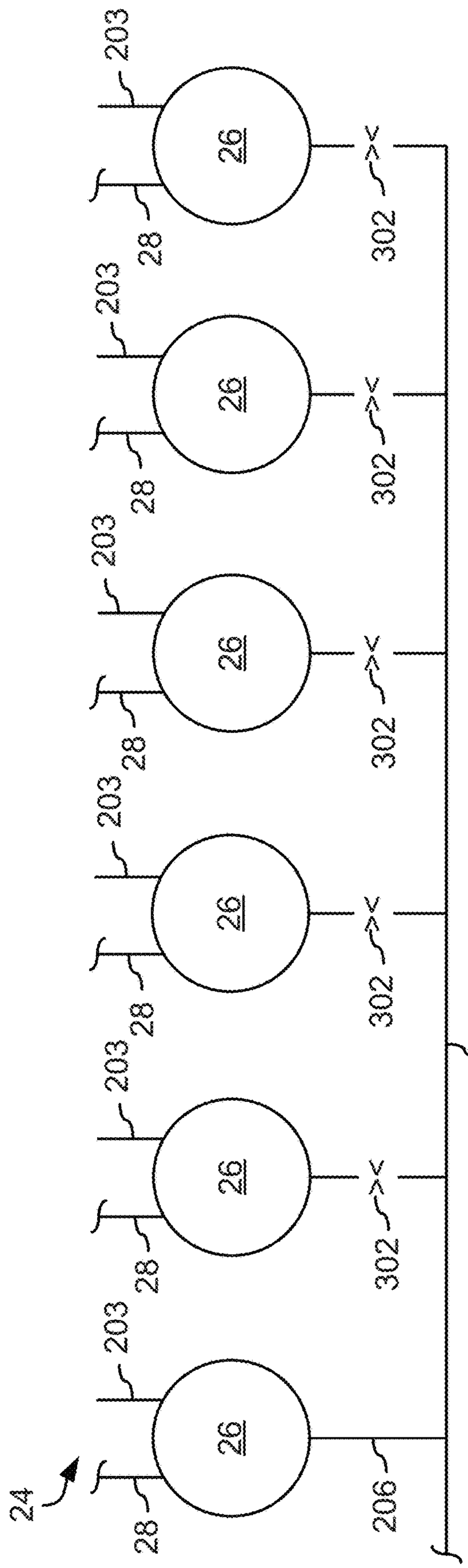

FIG. 43

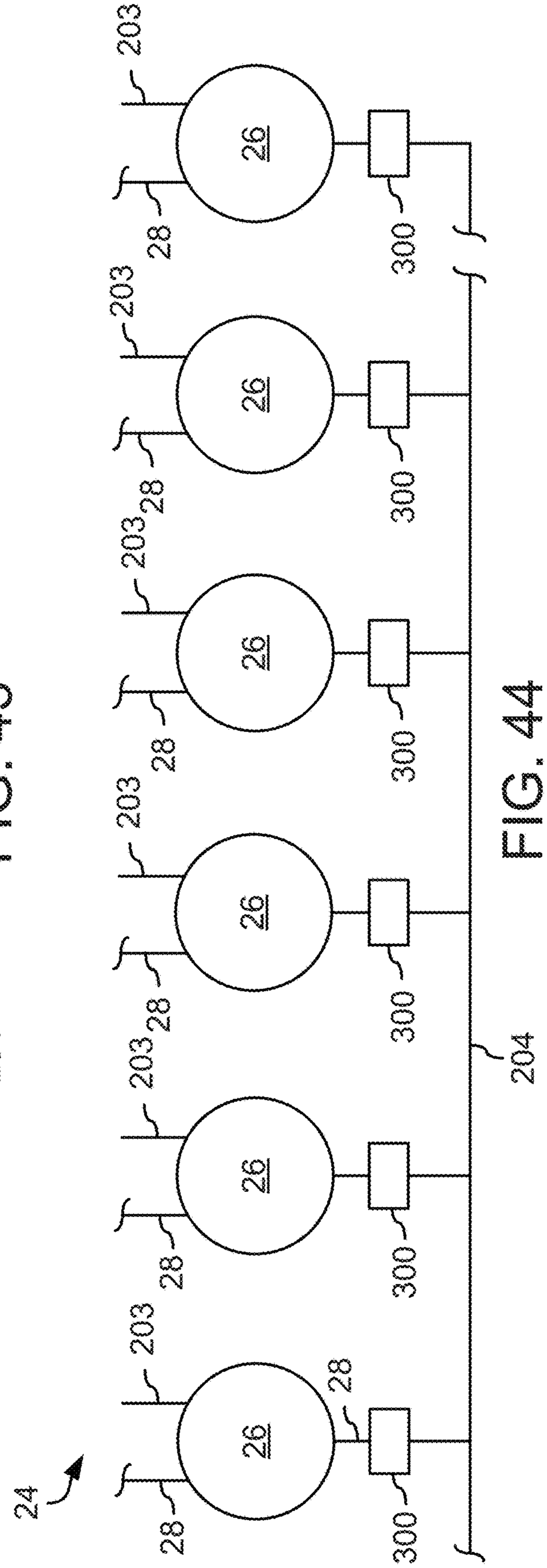

FIG. 44

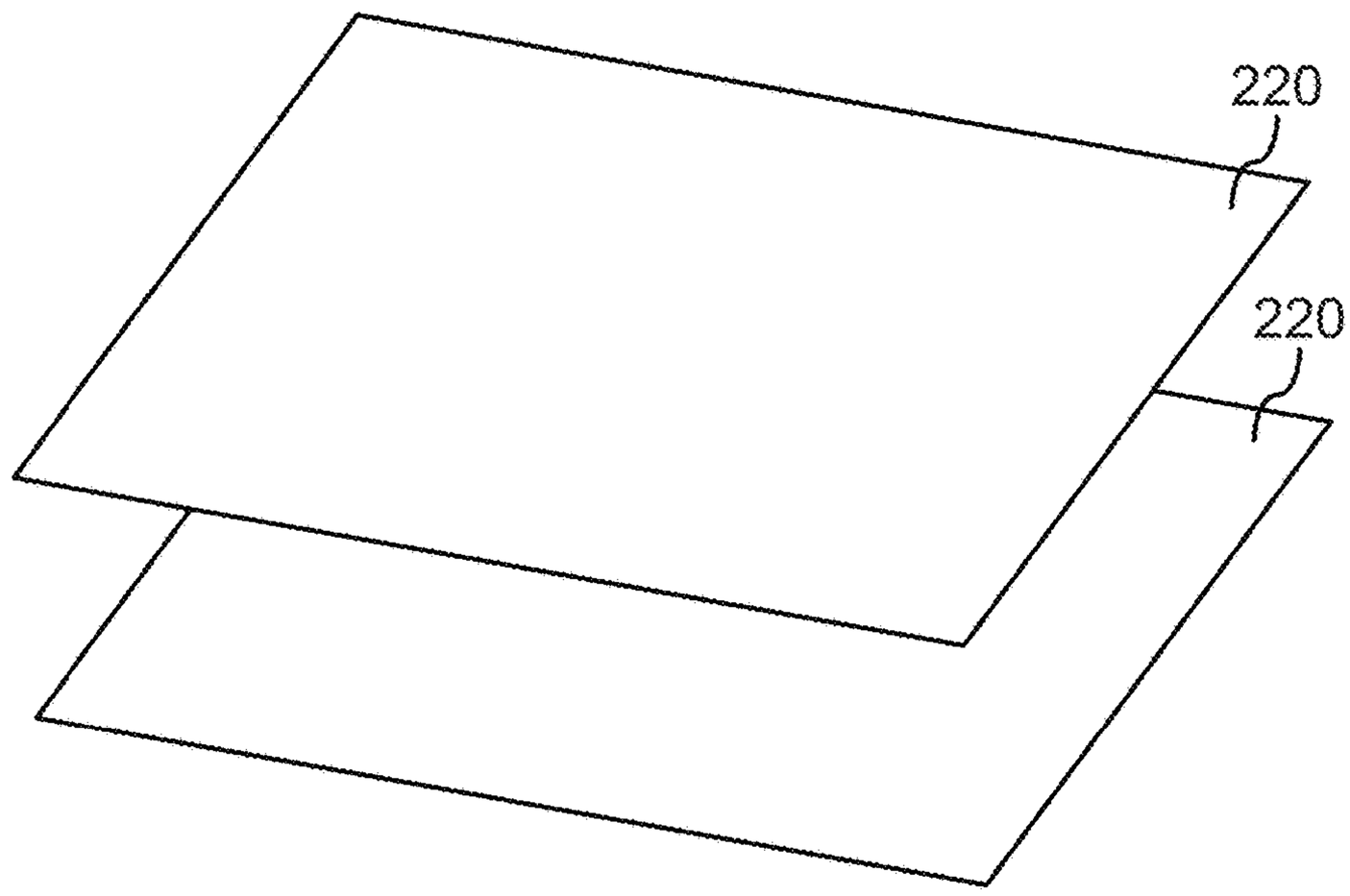

FIG. 45

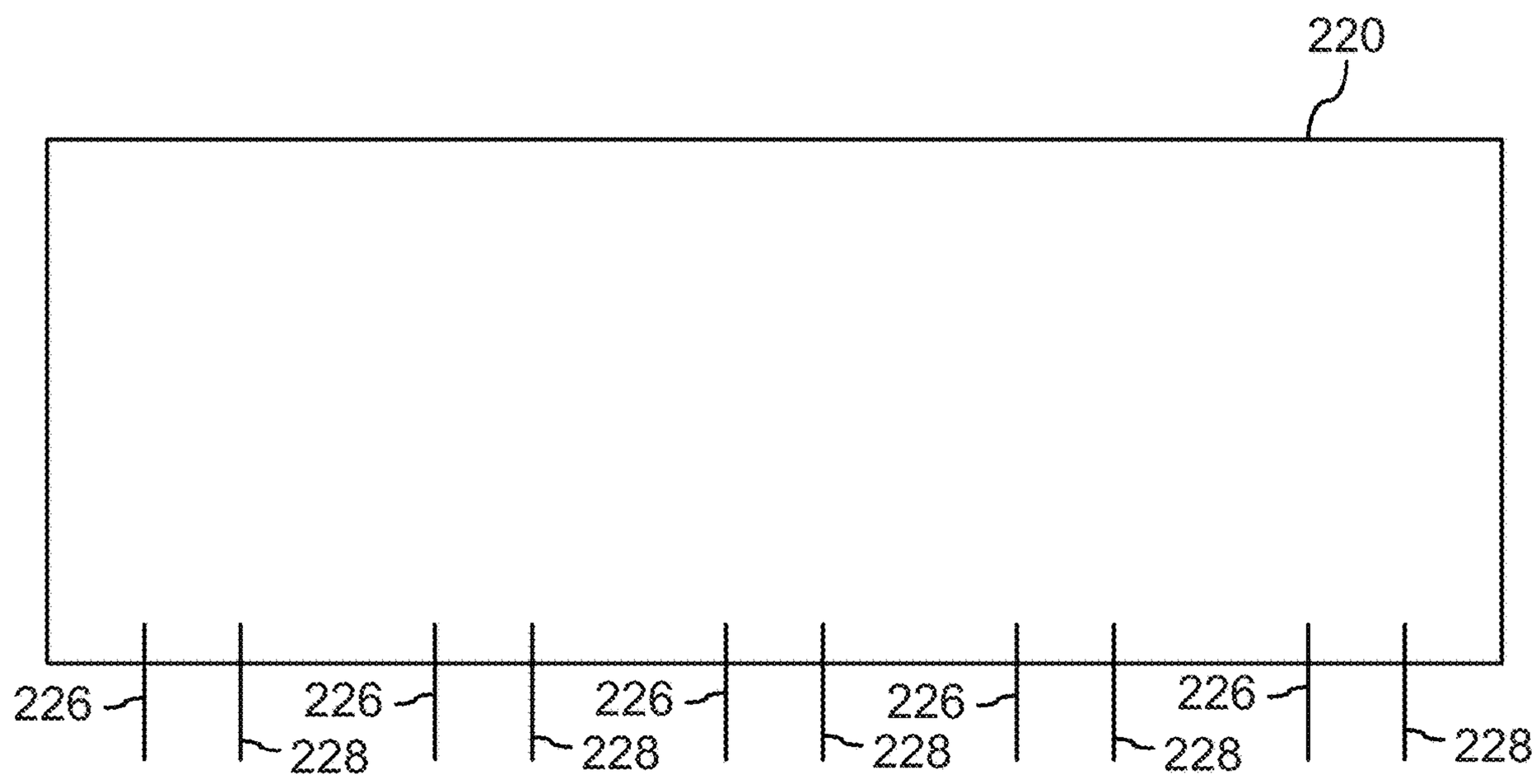

FIG. 46

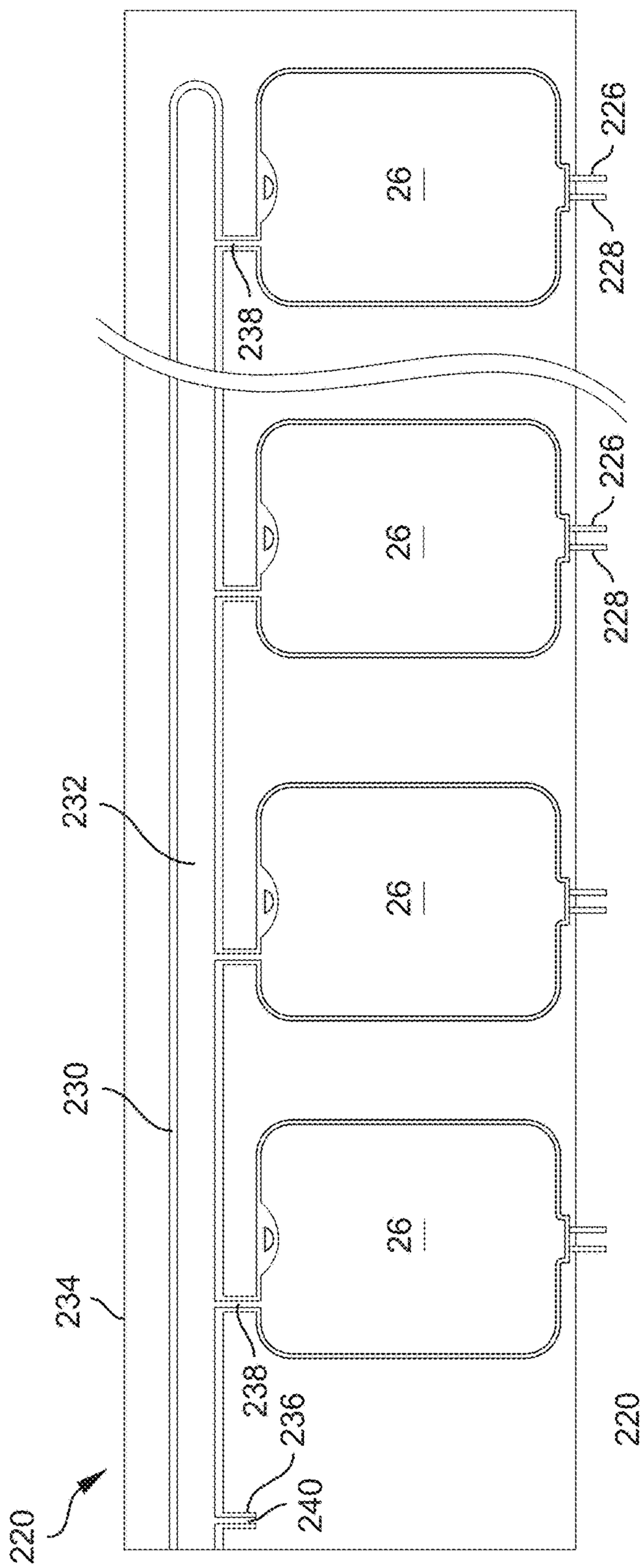
220
234
230
232
26
238
236
240
228
226

FIG. 47

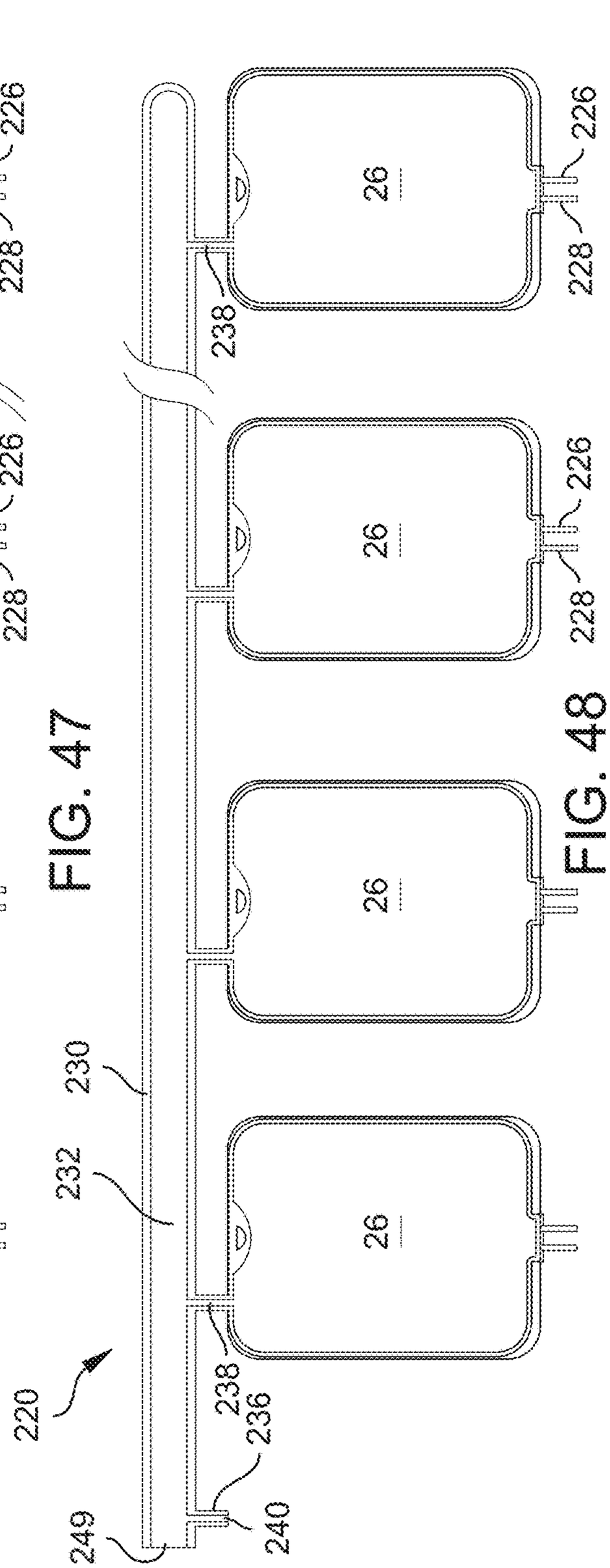
220
249
230
232
26
238
236
240
228
226

FIG. 48

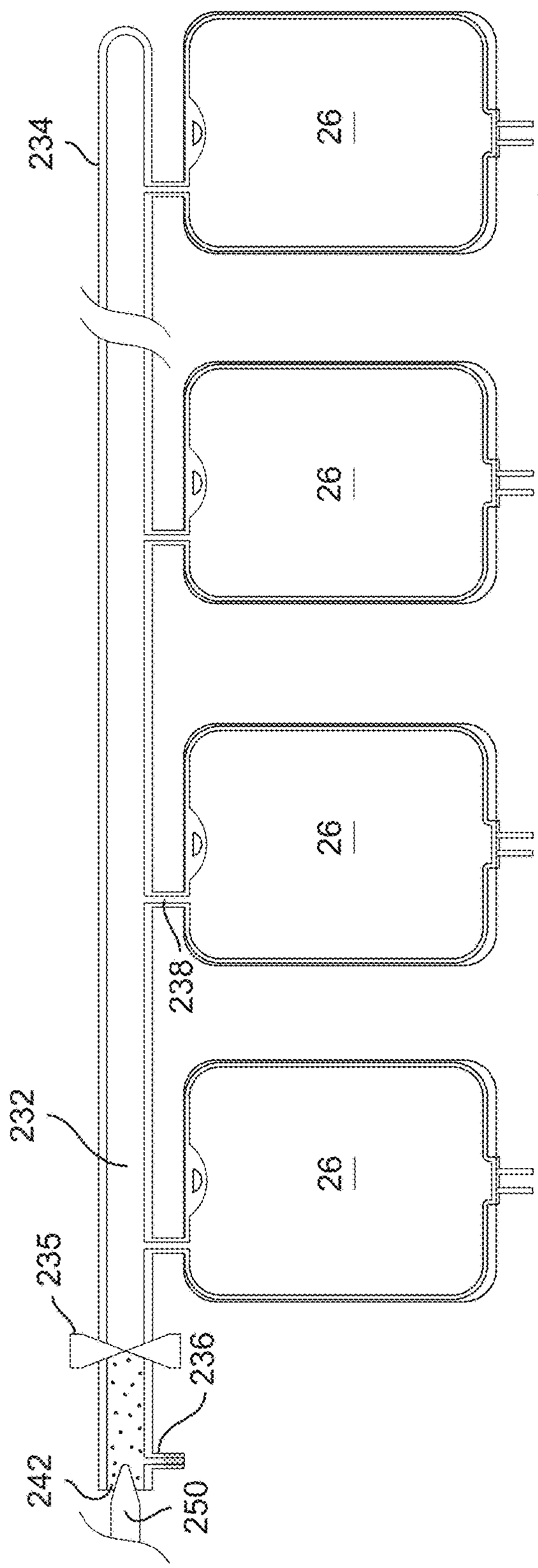
234
26
26
26
238
232
26
235
236
242
250

FIG. 49

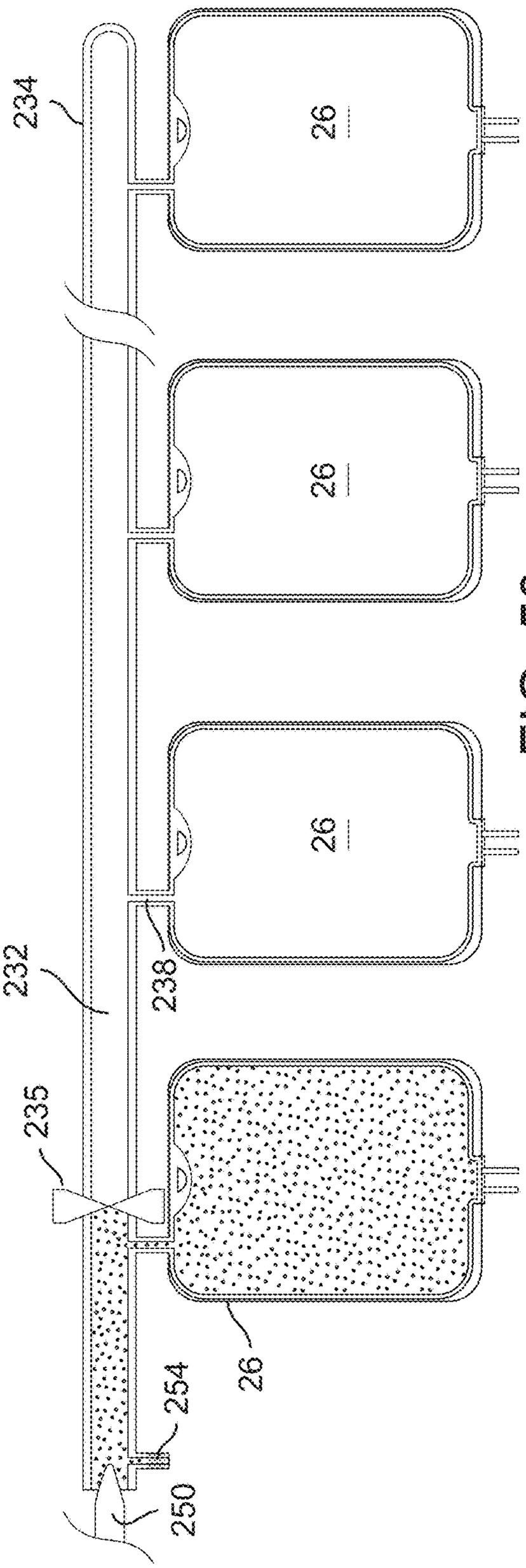
234
26
26
26
238
232
235
26
254
250

FIG. 50

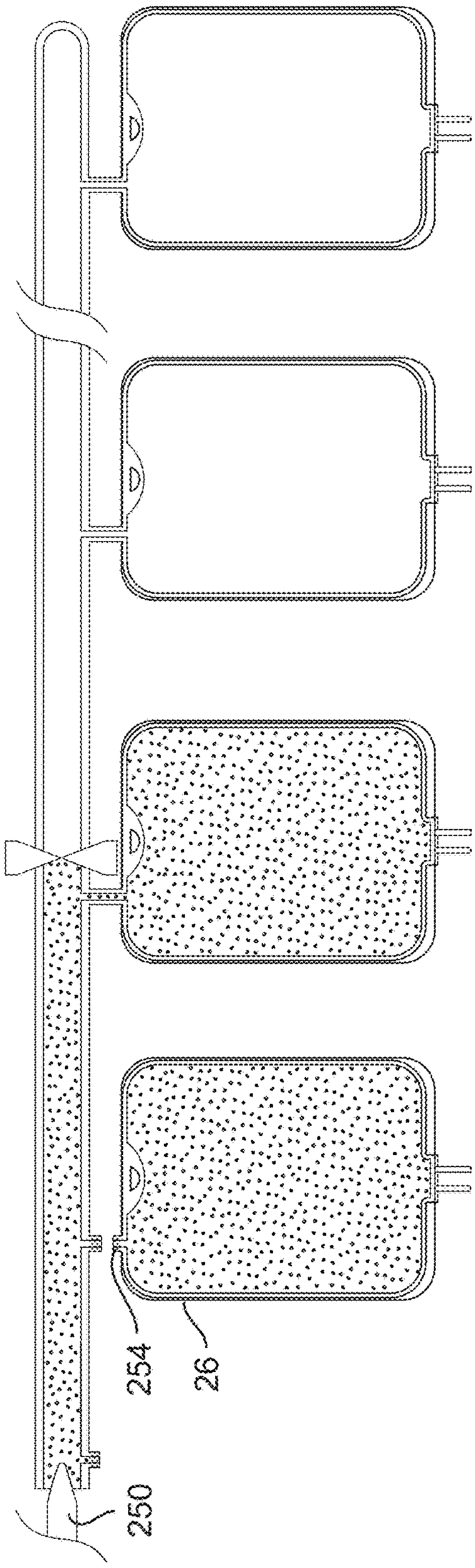

FIG. 51

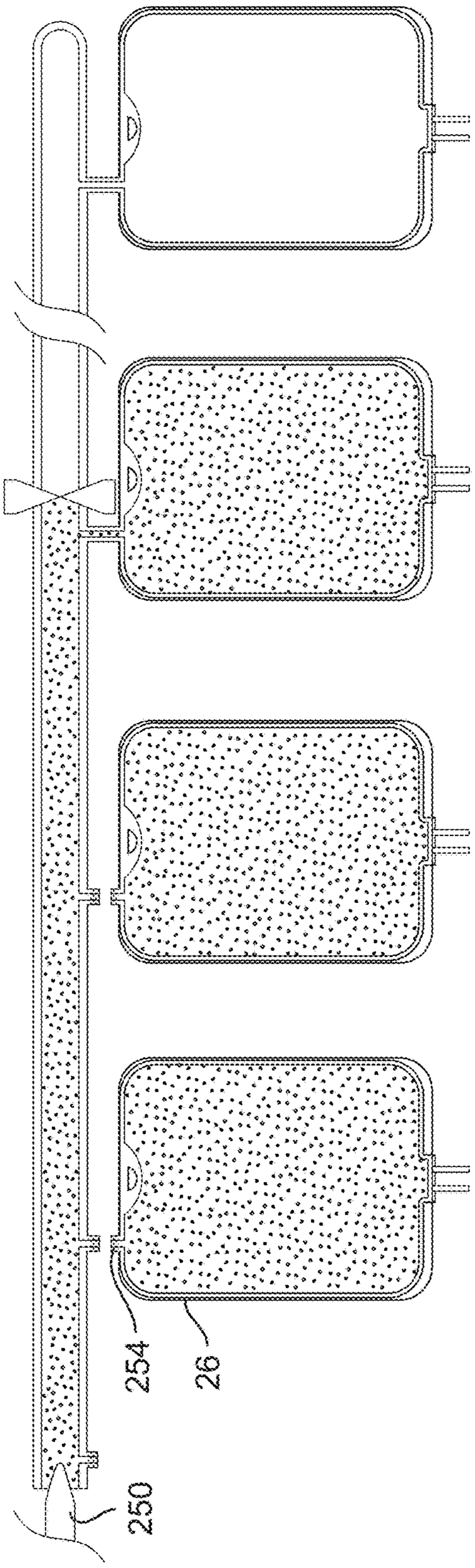

FIG. 52

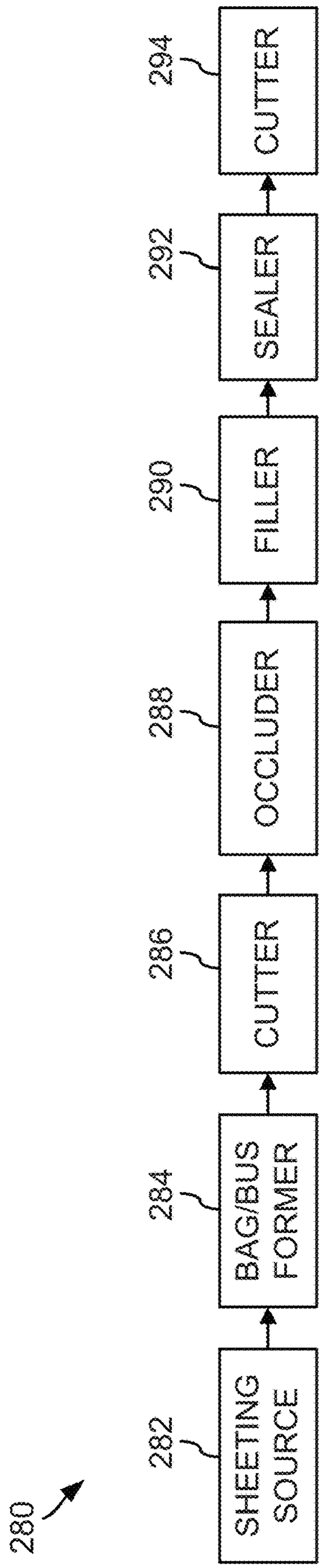
280
282
SHEETING SOURCE
284
BAG/BUS FORMER
286
CUTTER
288
OCCLUDER
290
FILLER
292
SEALER
294
CUTTER

FIG. 53

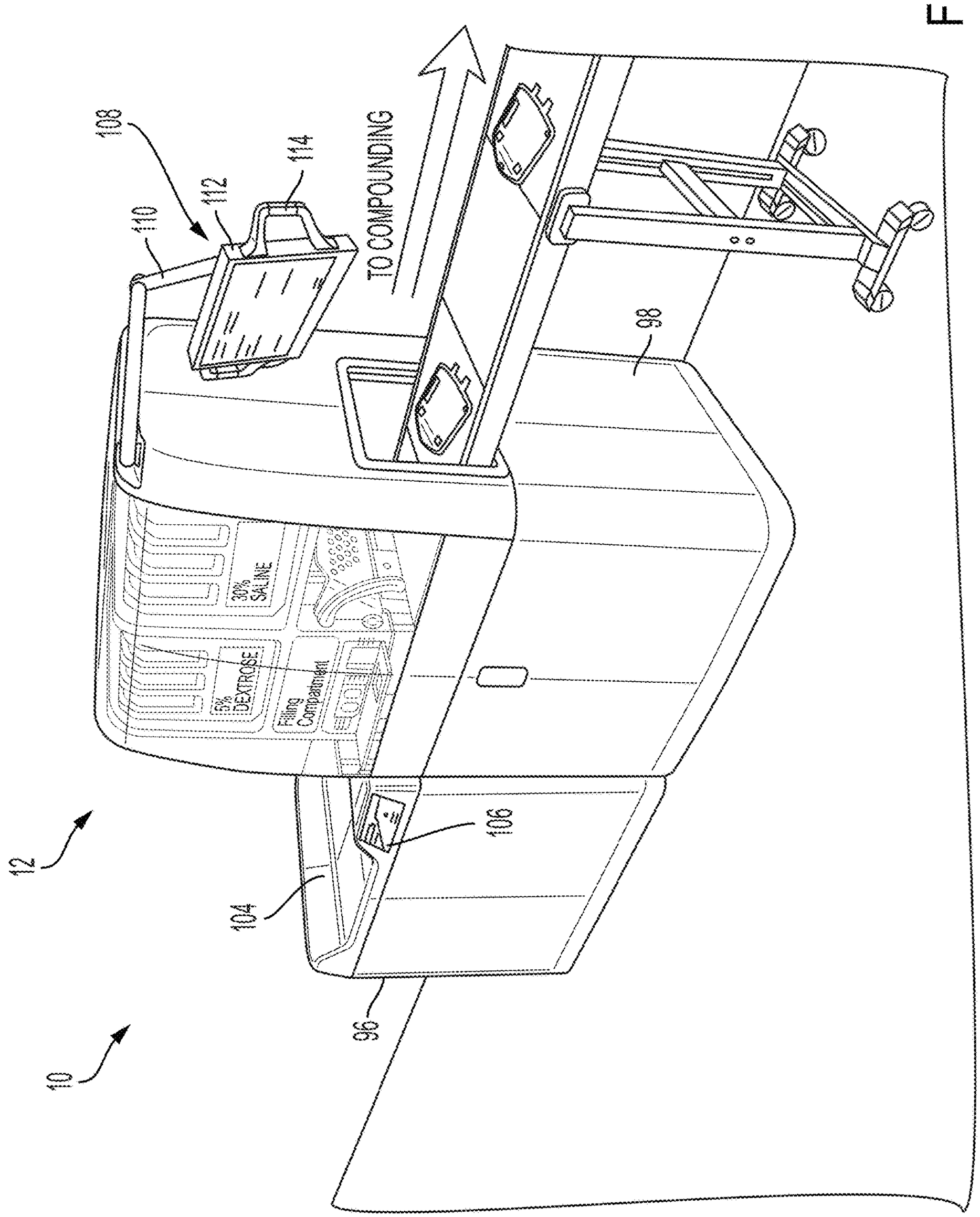
108
110
112
114
TO COMPOUNDING
98
30% SALINE
5% DEXTROSE
Filling Compartment
106
12
104
96
10

FIG. 54

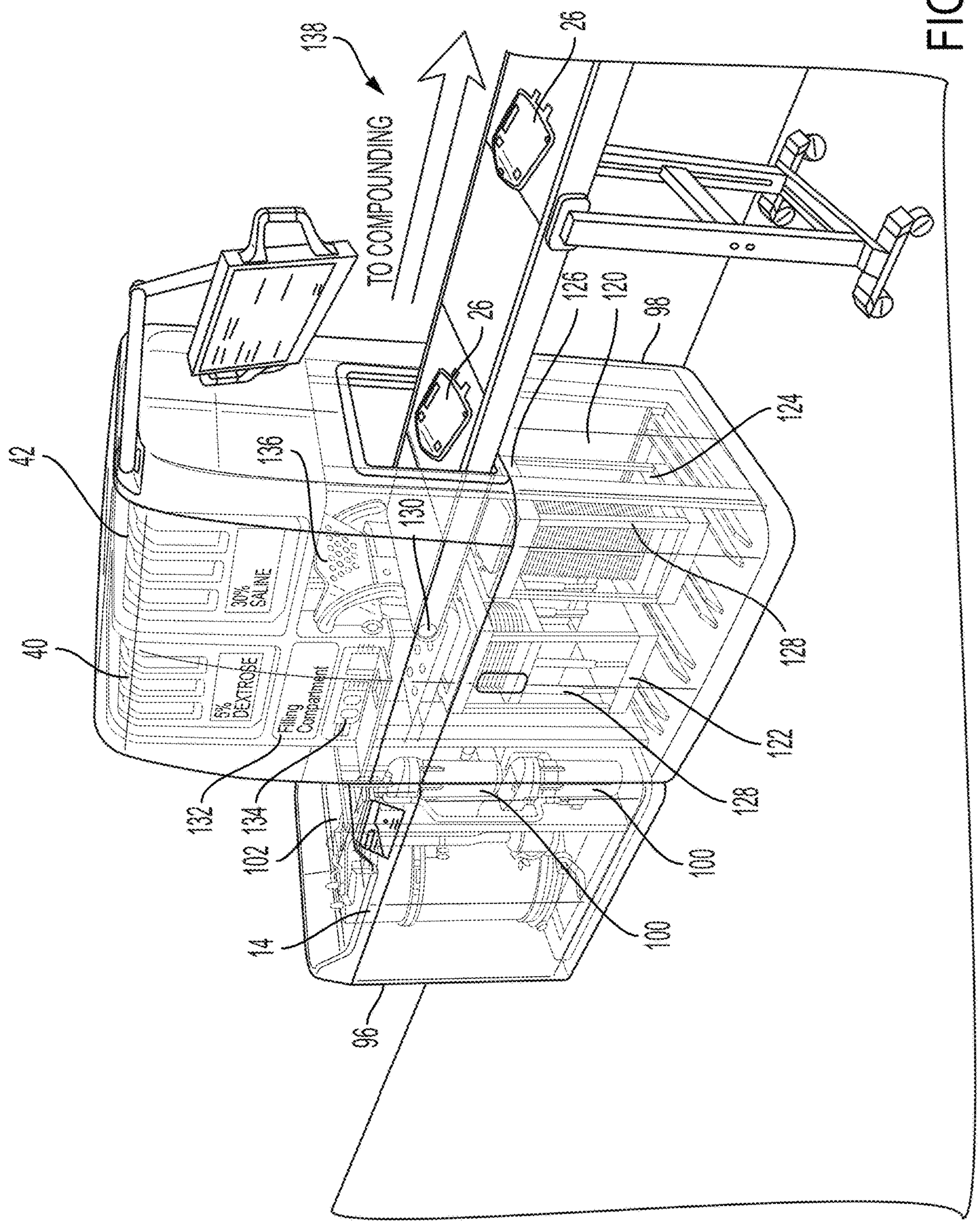
138
TO COMPOUNDING
26
26
126
120
98
124
42
136
130
128
40
30% SALINE
5% DEXTROSE
Filling Compartment
122
128
132
134
102
100
14
100
96

FIG. 55

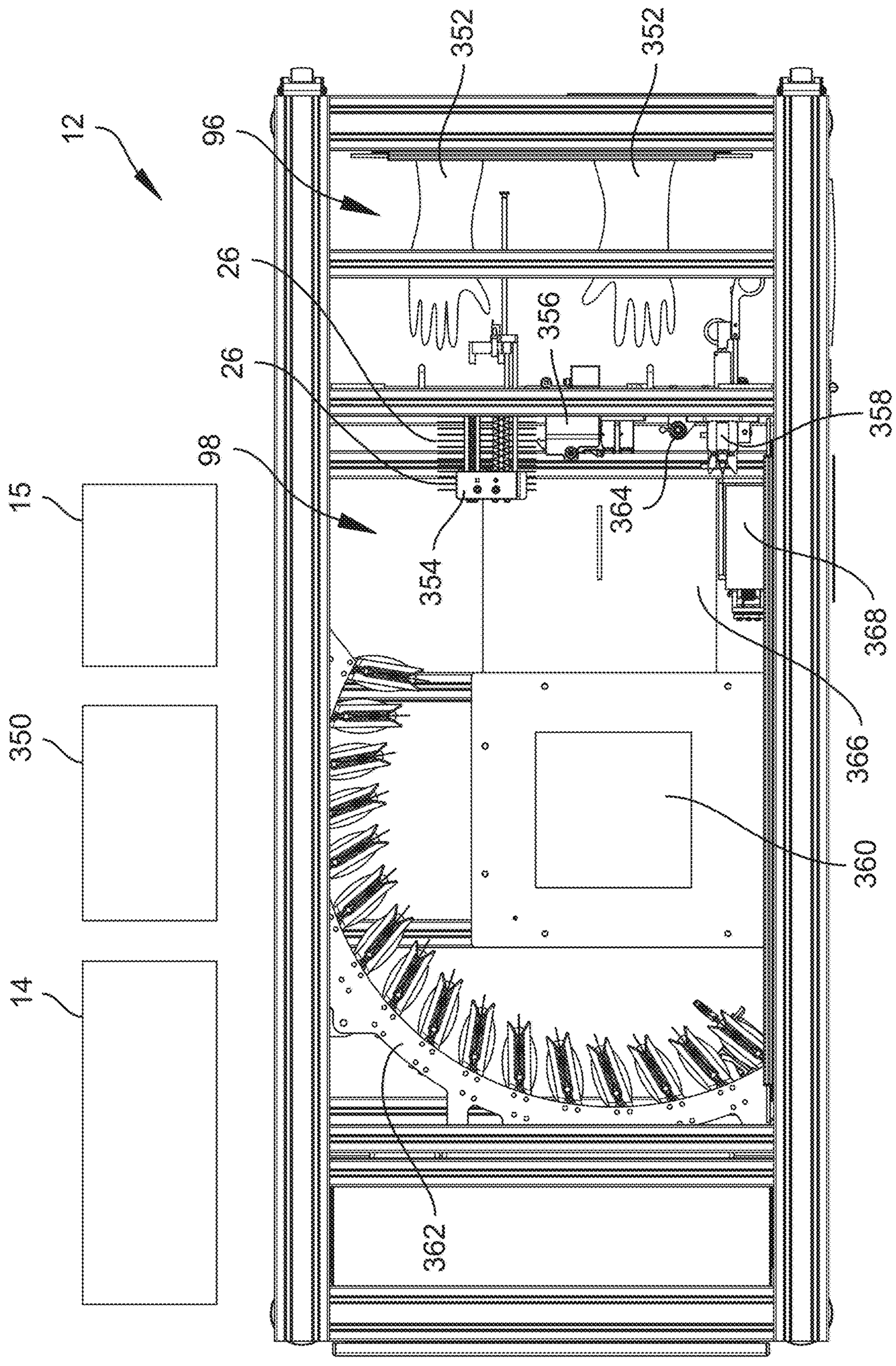

FIG. 56

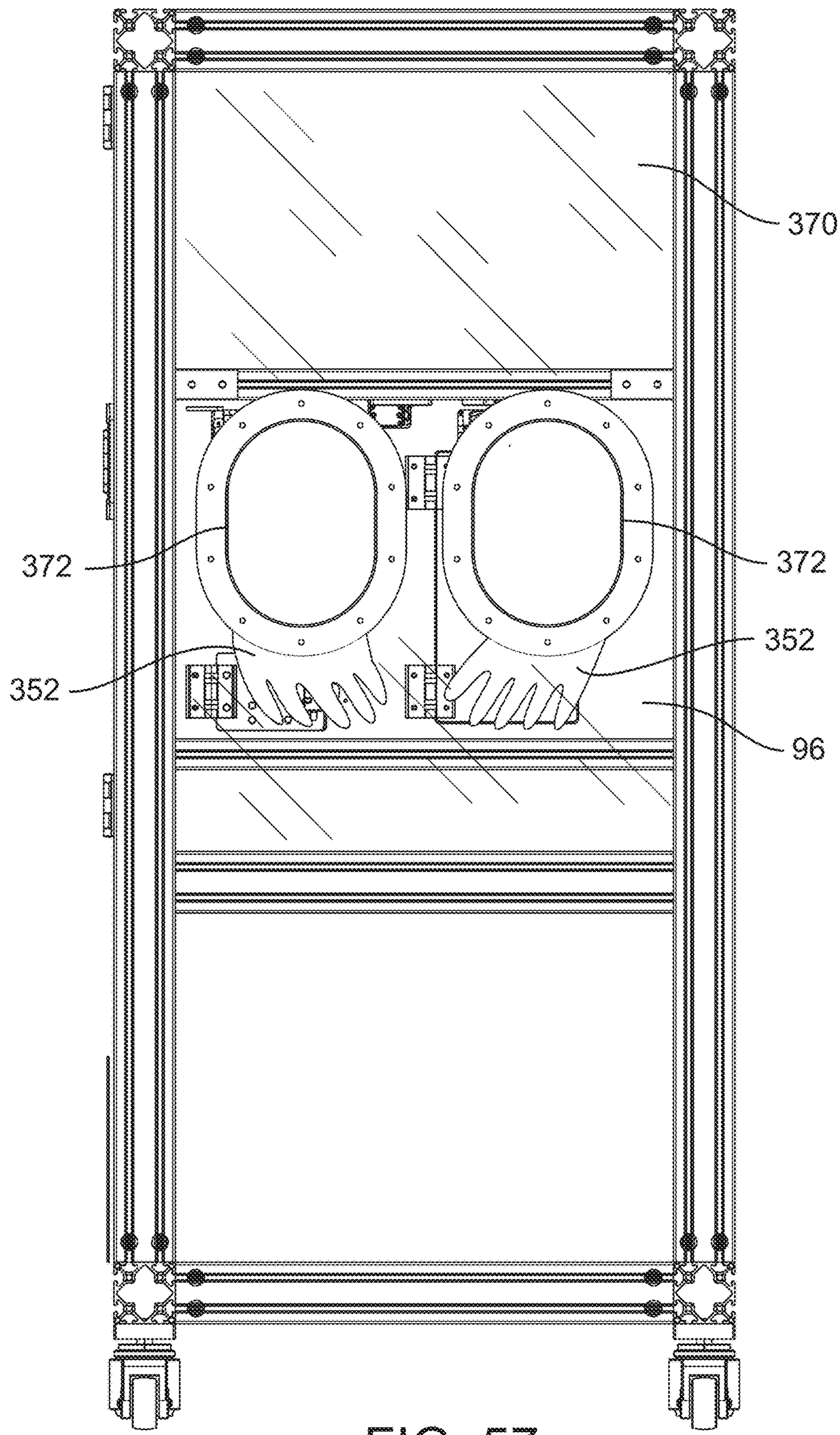

FIG. 57

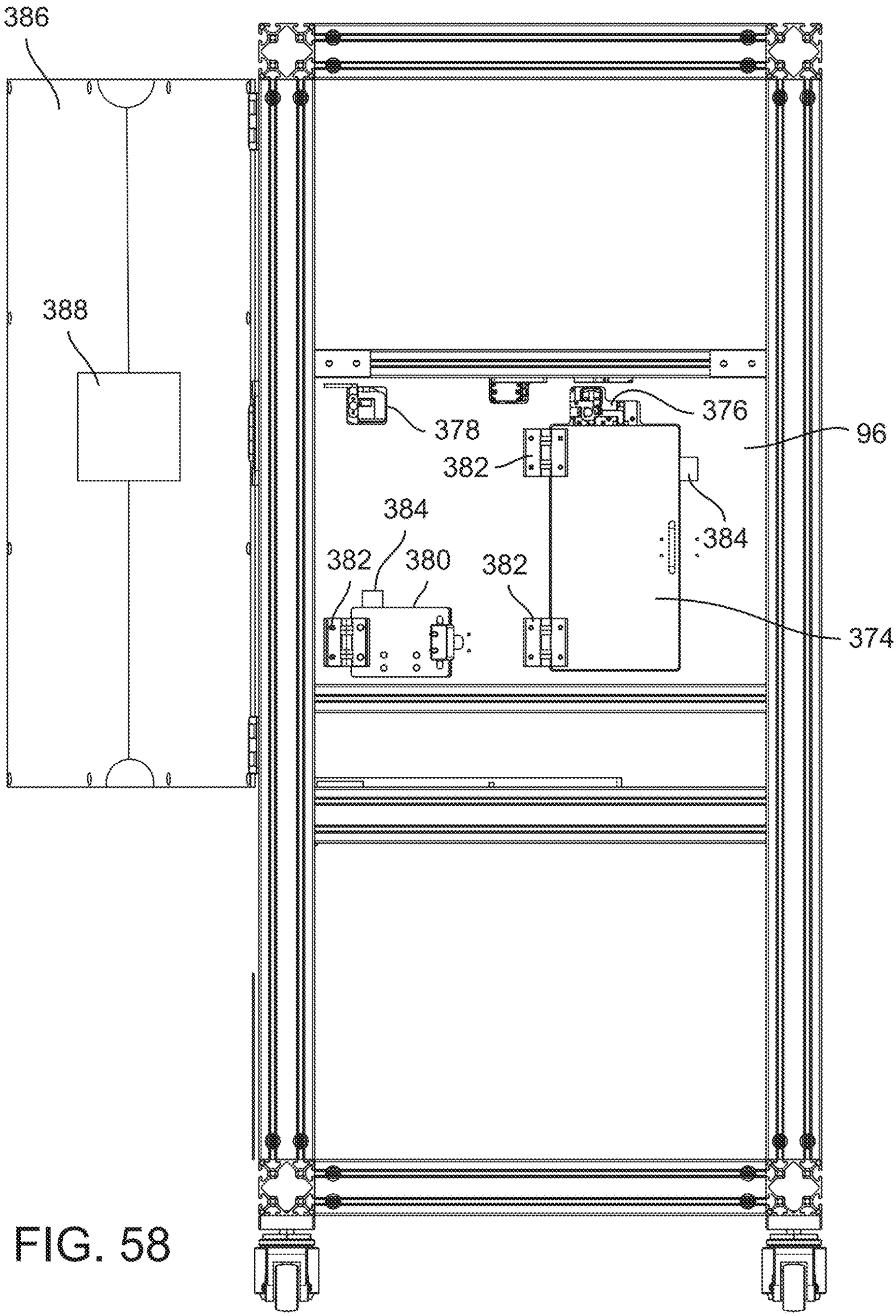

FIG. 58

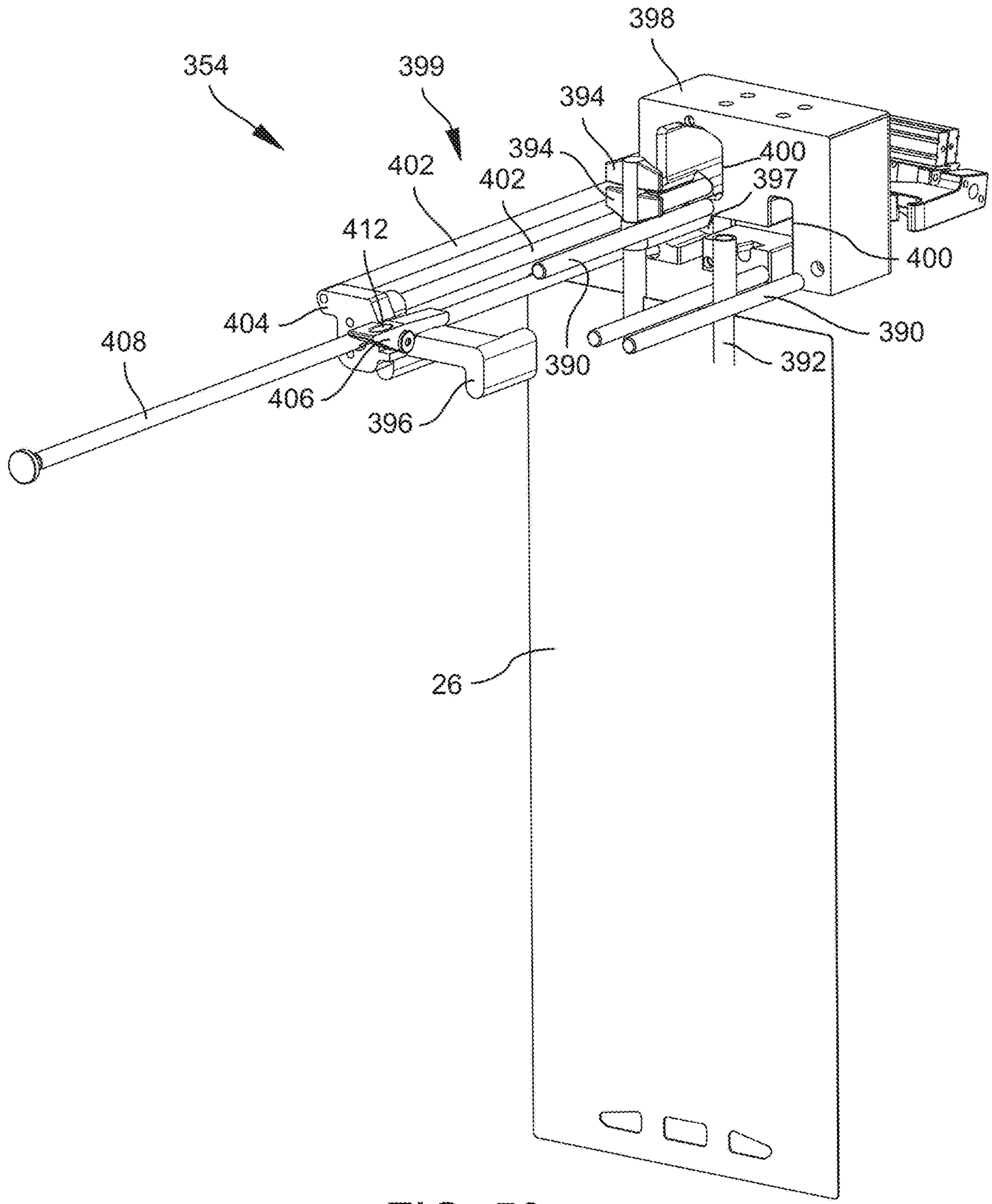
398
354
399
394
394
400
402
402
397
412
400
404
390
408
390
392
406
396
26

FIG. 59

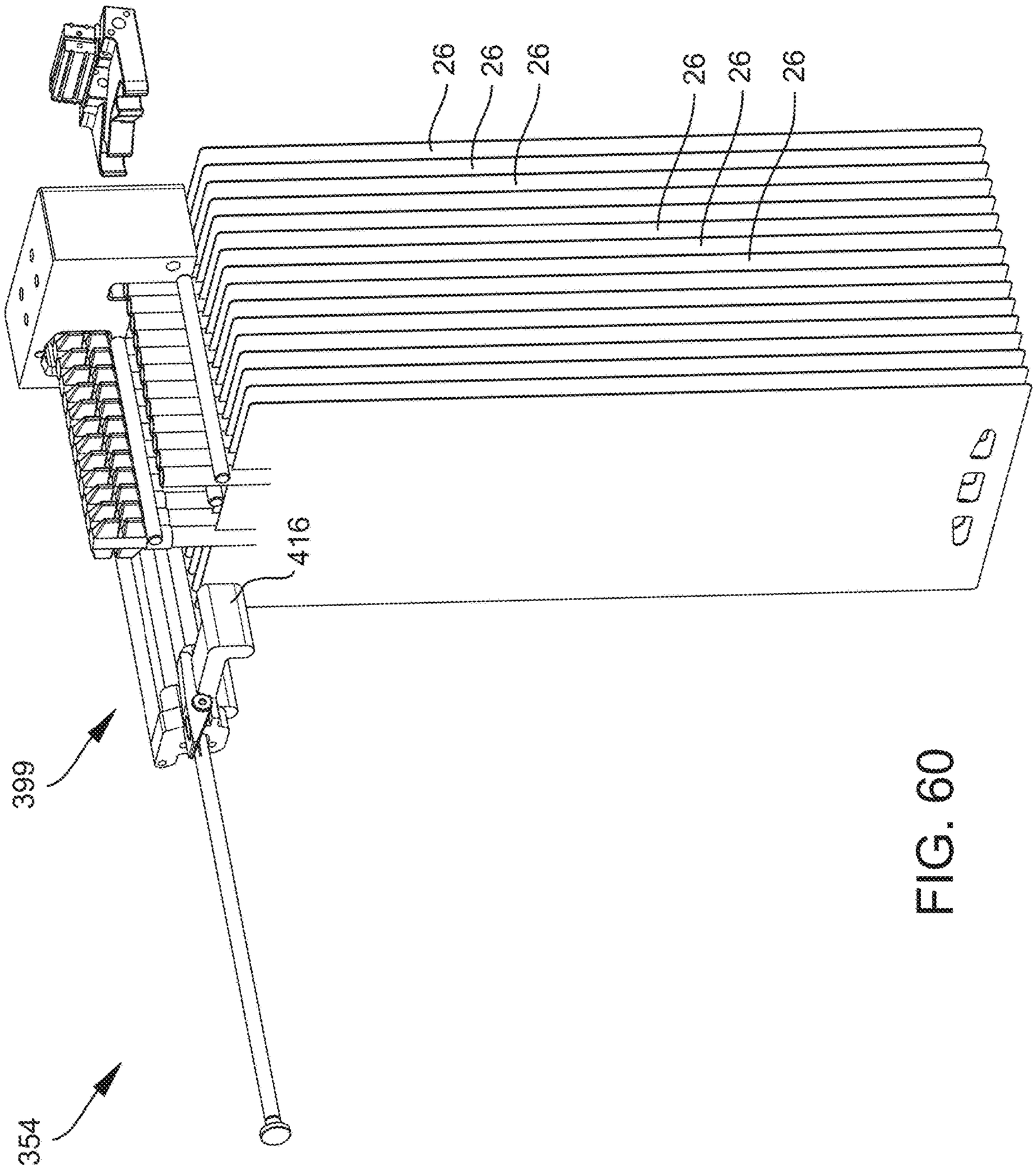

FIG. 60

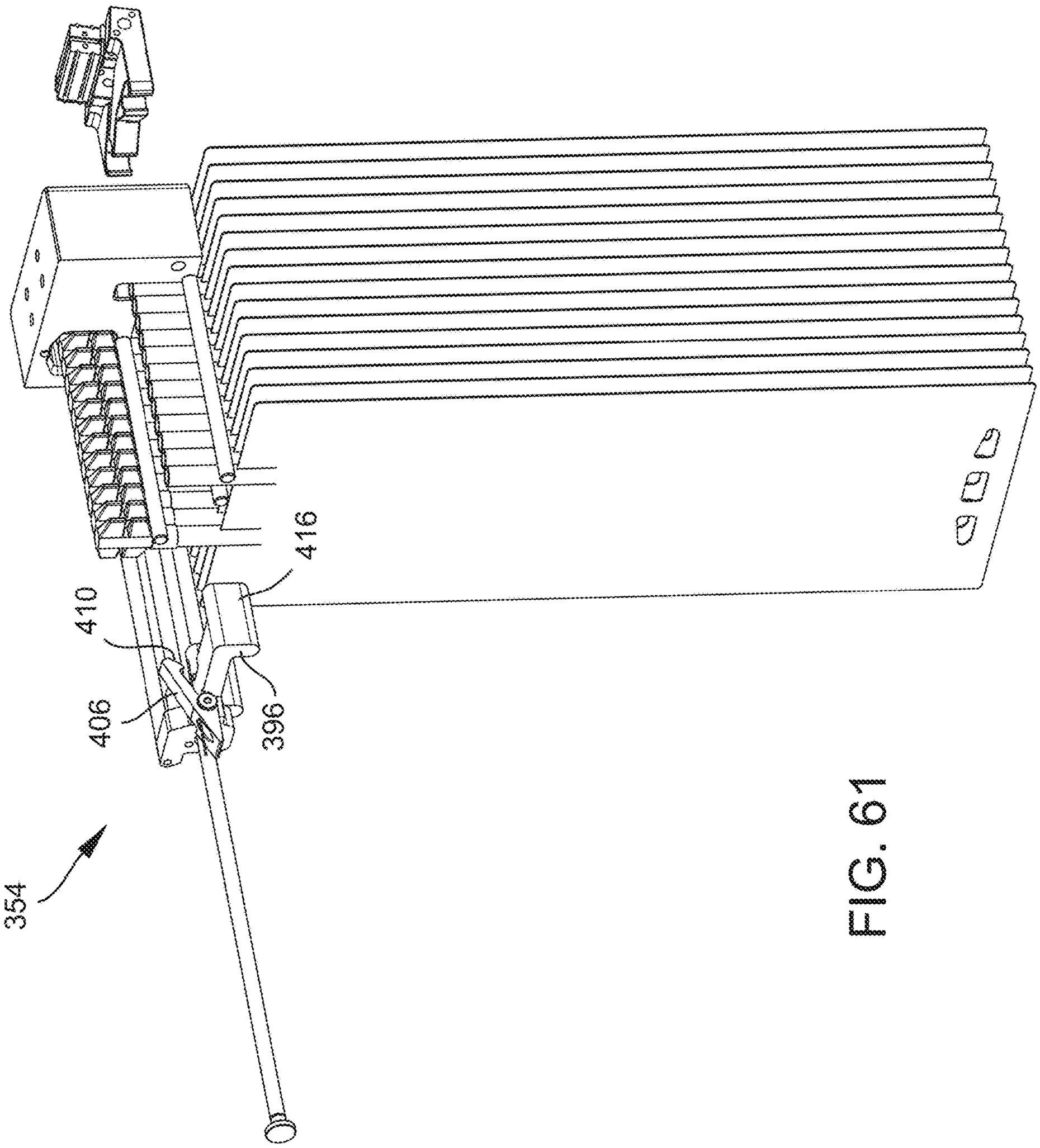

FIG. 61

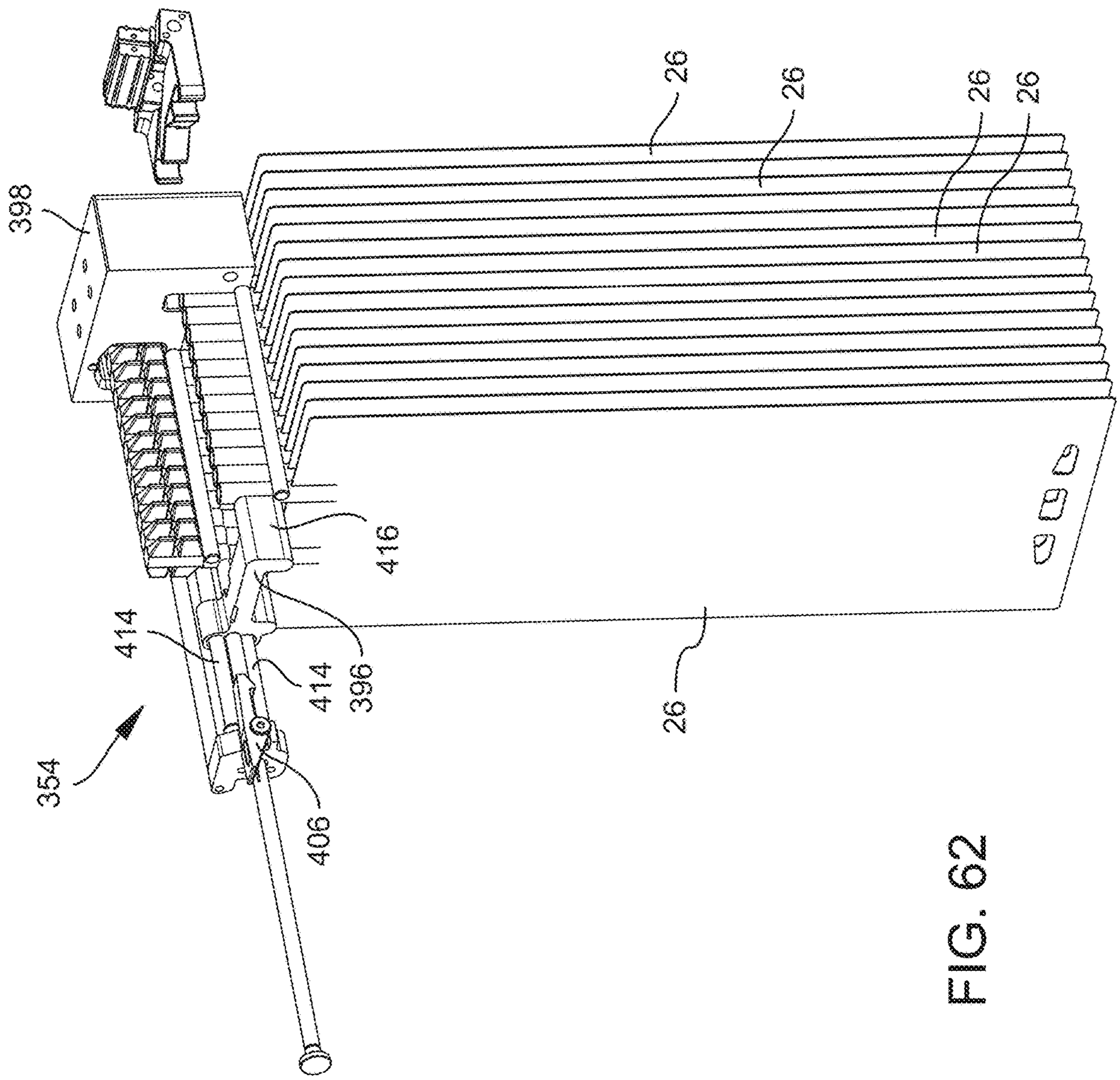

FIG. 62

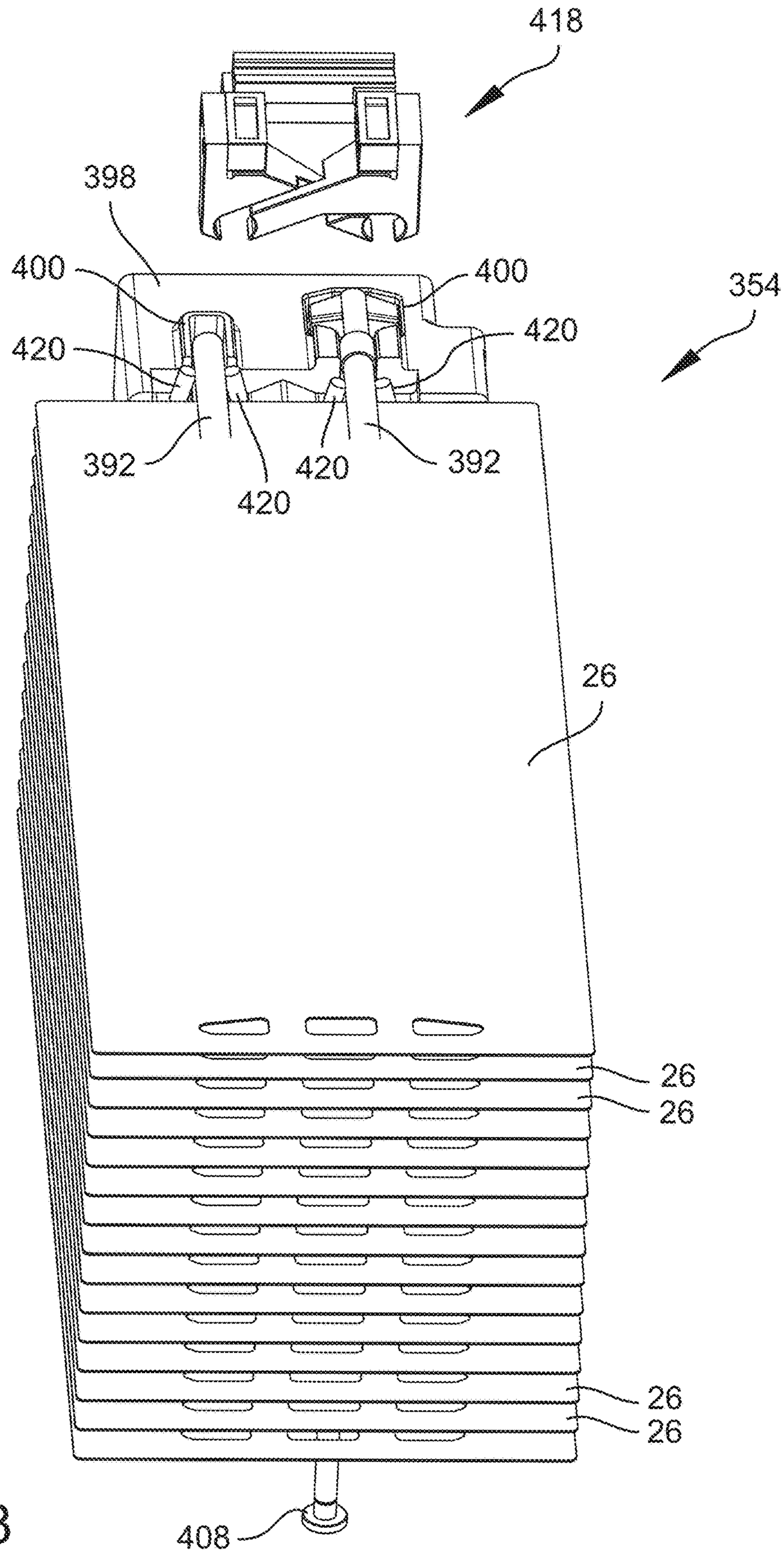

FIG. 63

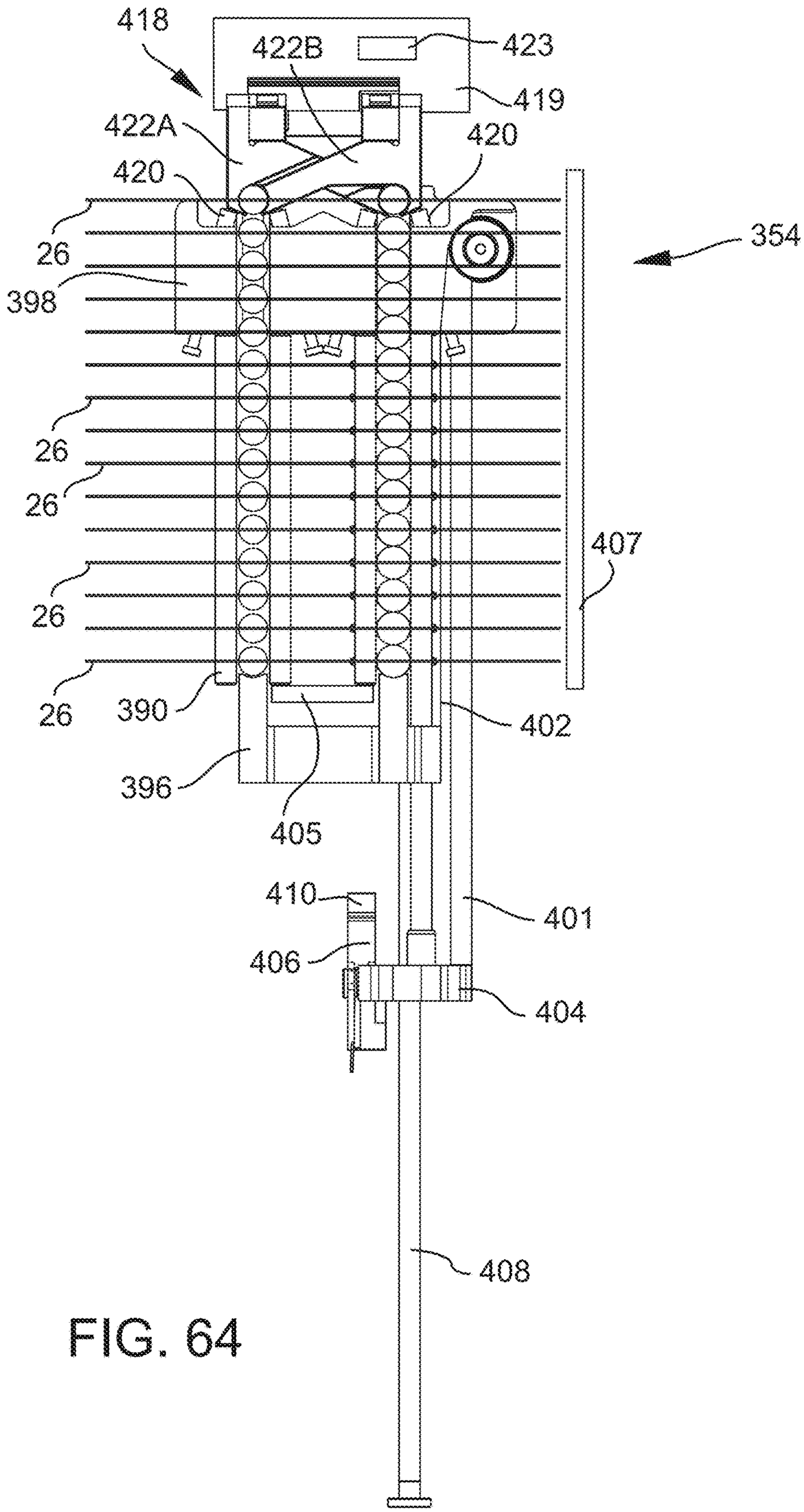
418
422B
423
419
422A
420
420
26
354
398
26
26
407
26
26
390
402
396
405
410
401
406
404
408

FIG. 64

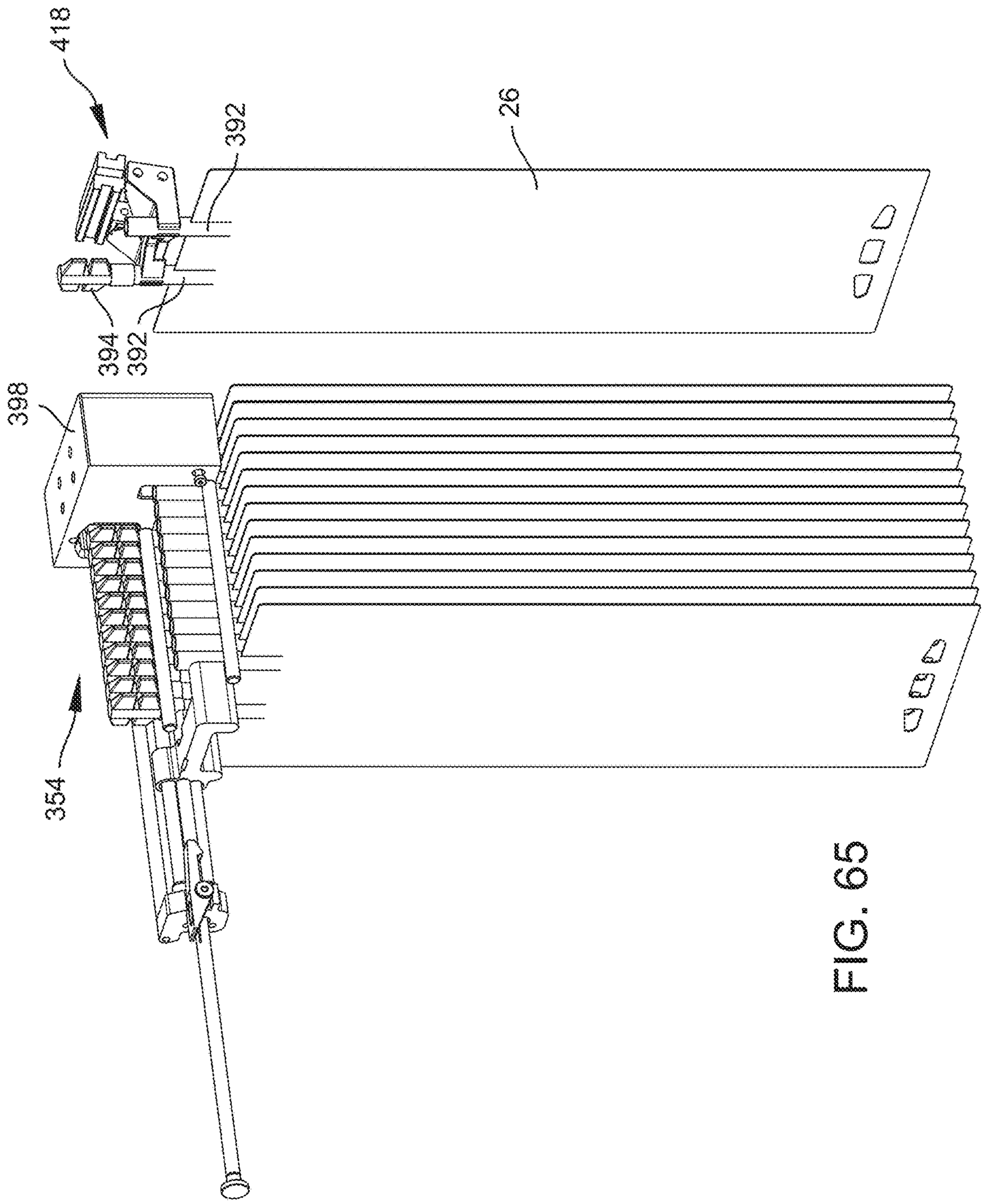

FIG. 65

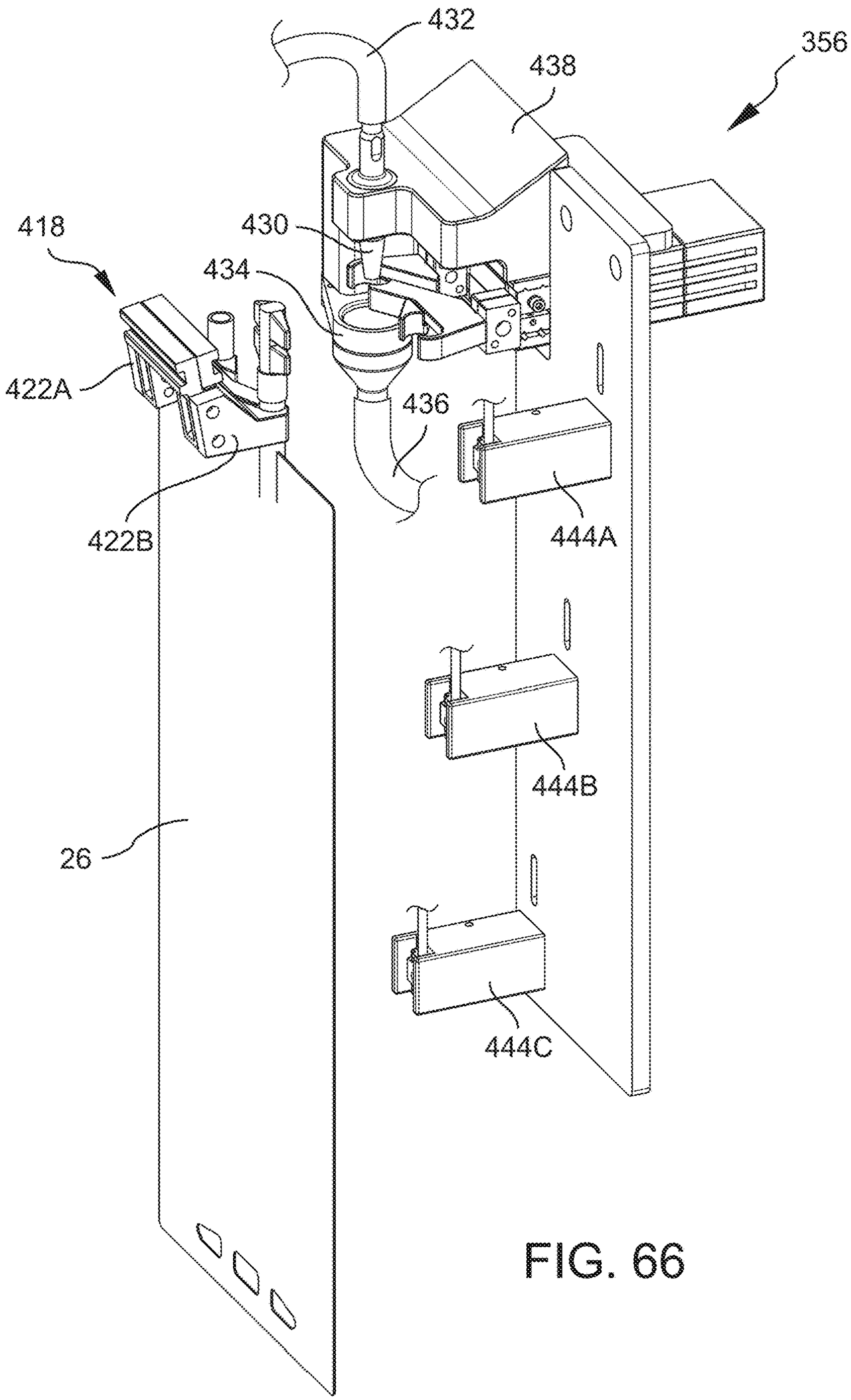

FIG. 66

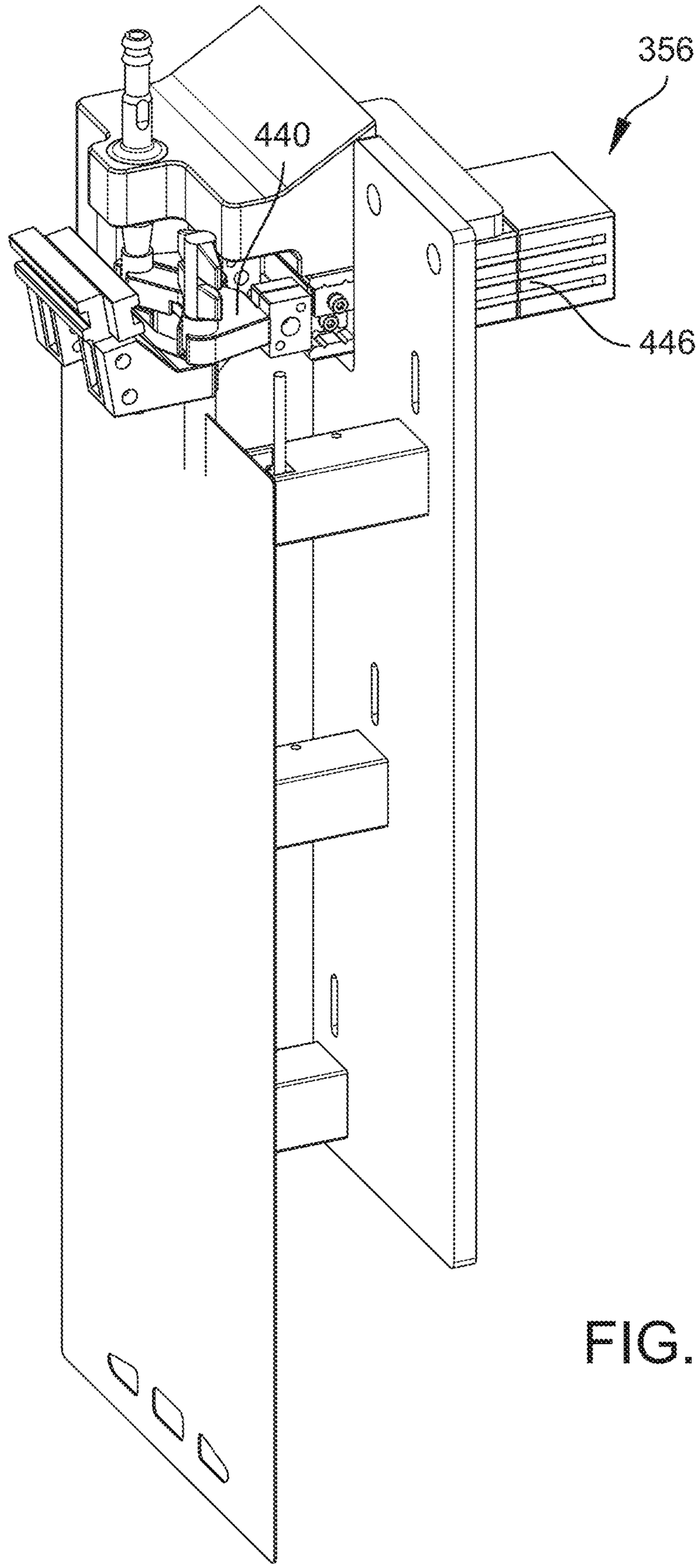

FIG. 67

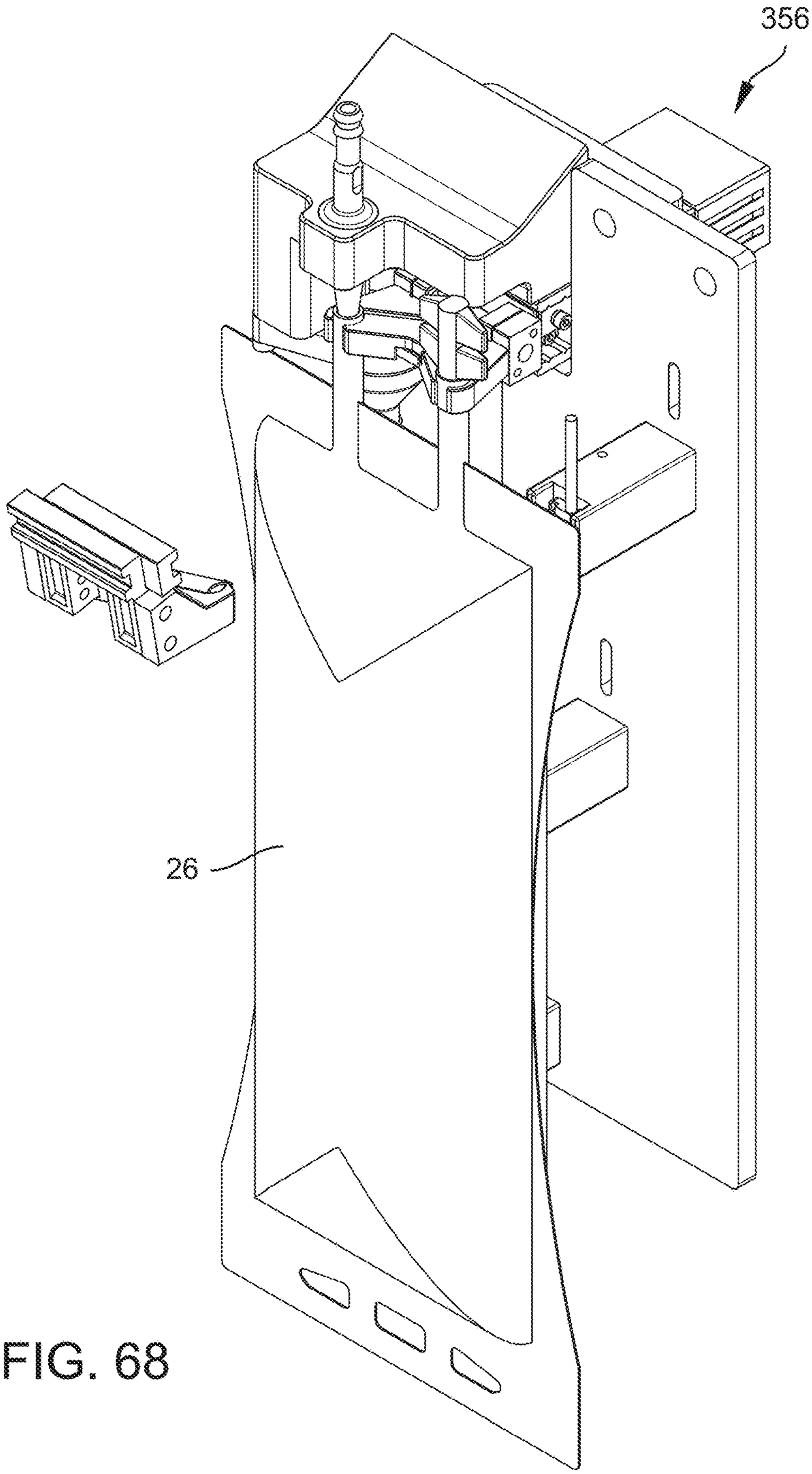

FIG. 68

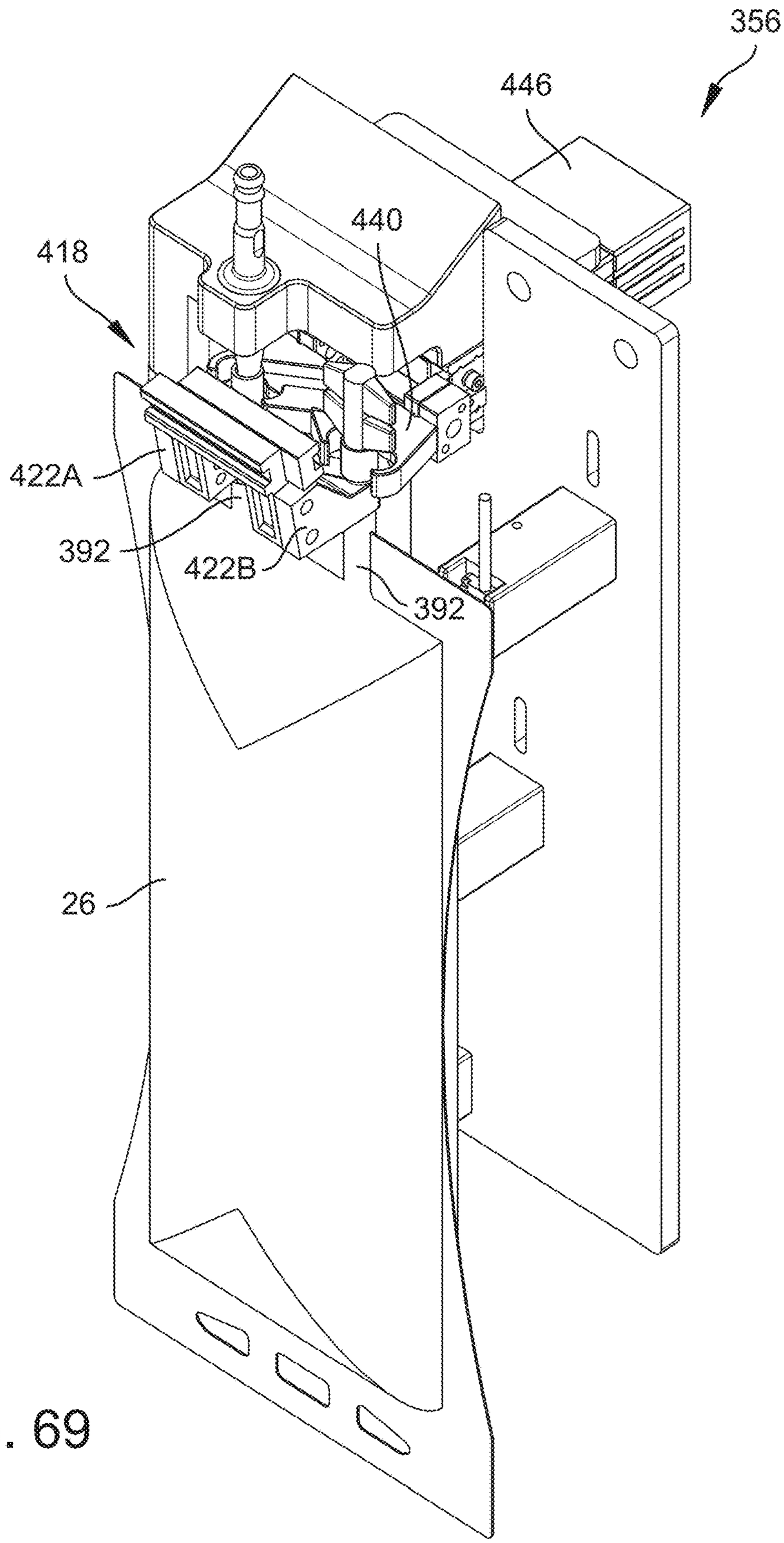

FIG. 69

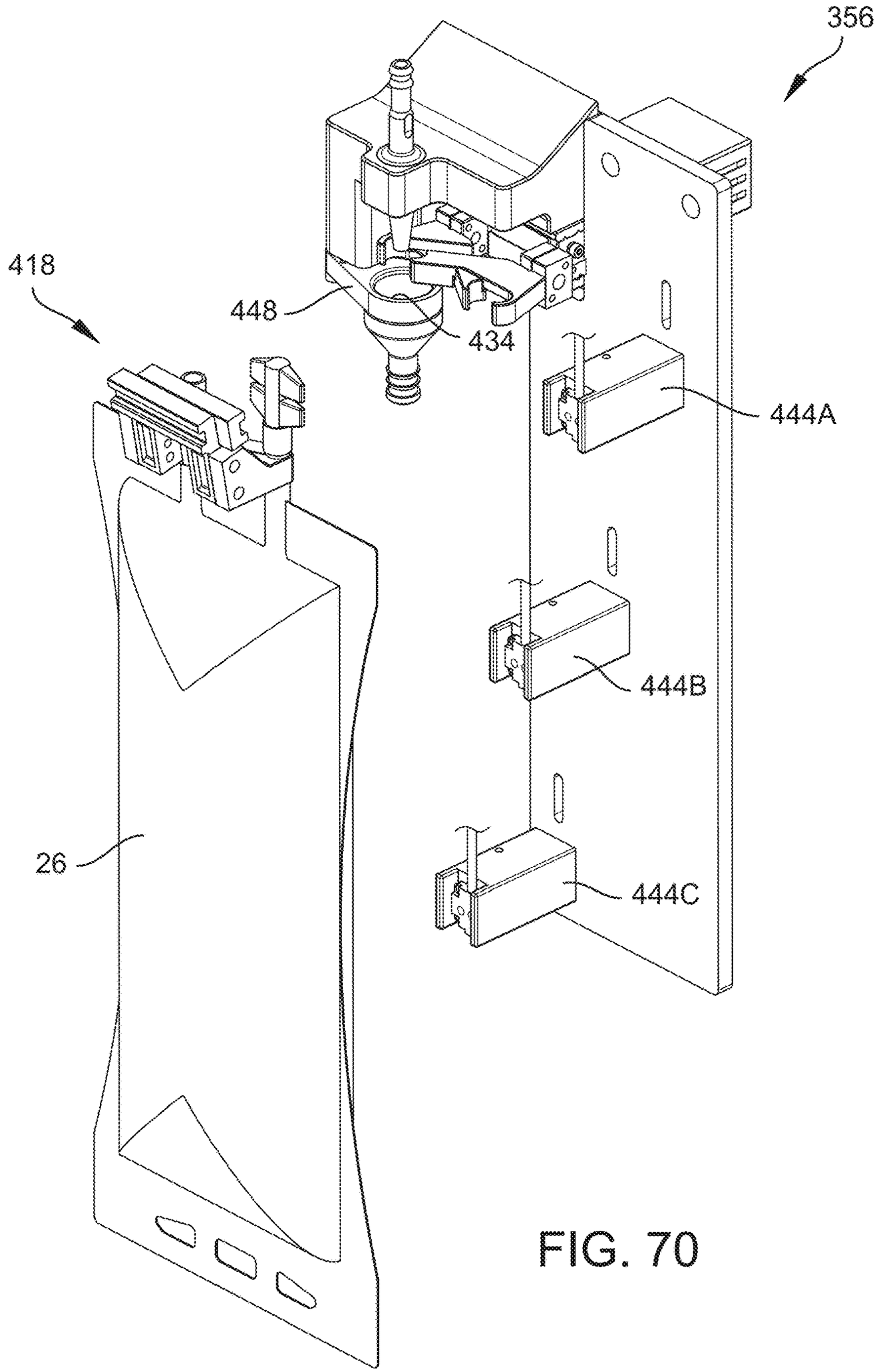

FIG. 70

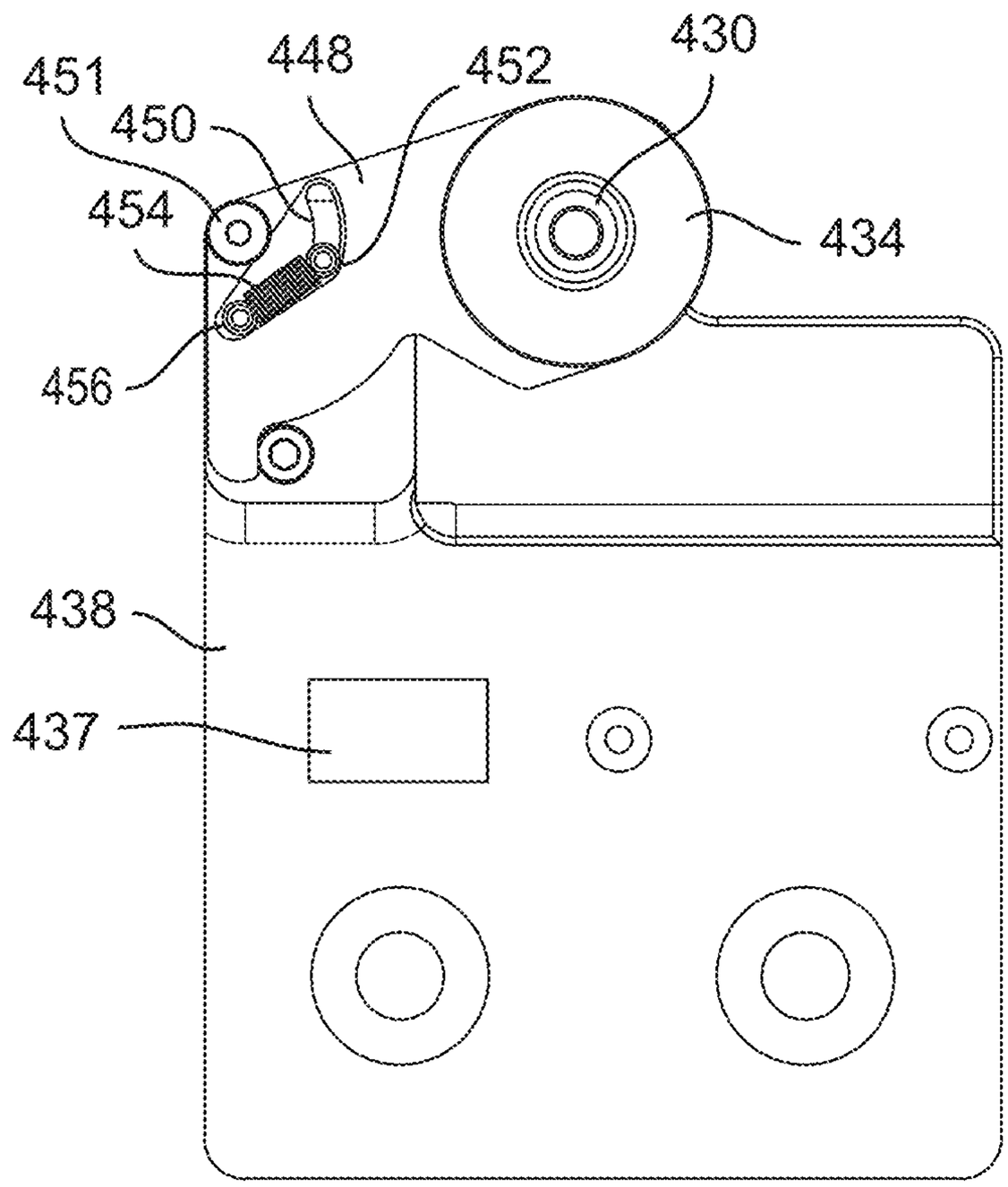

FIG. 71A

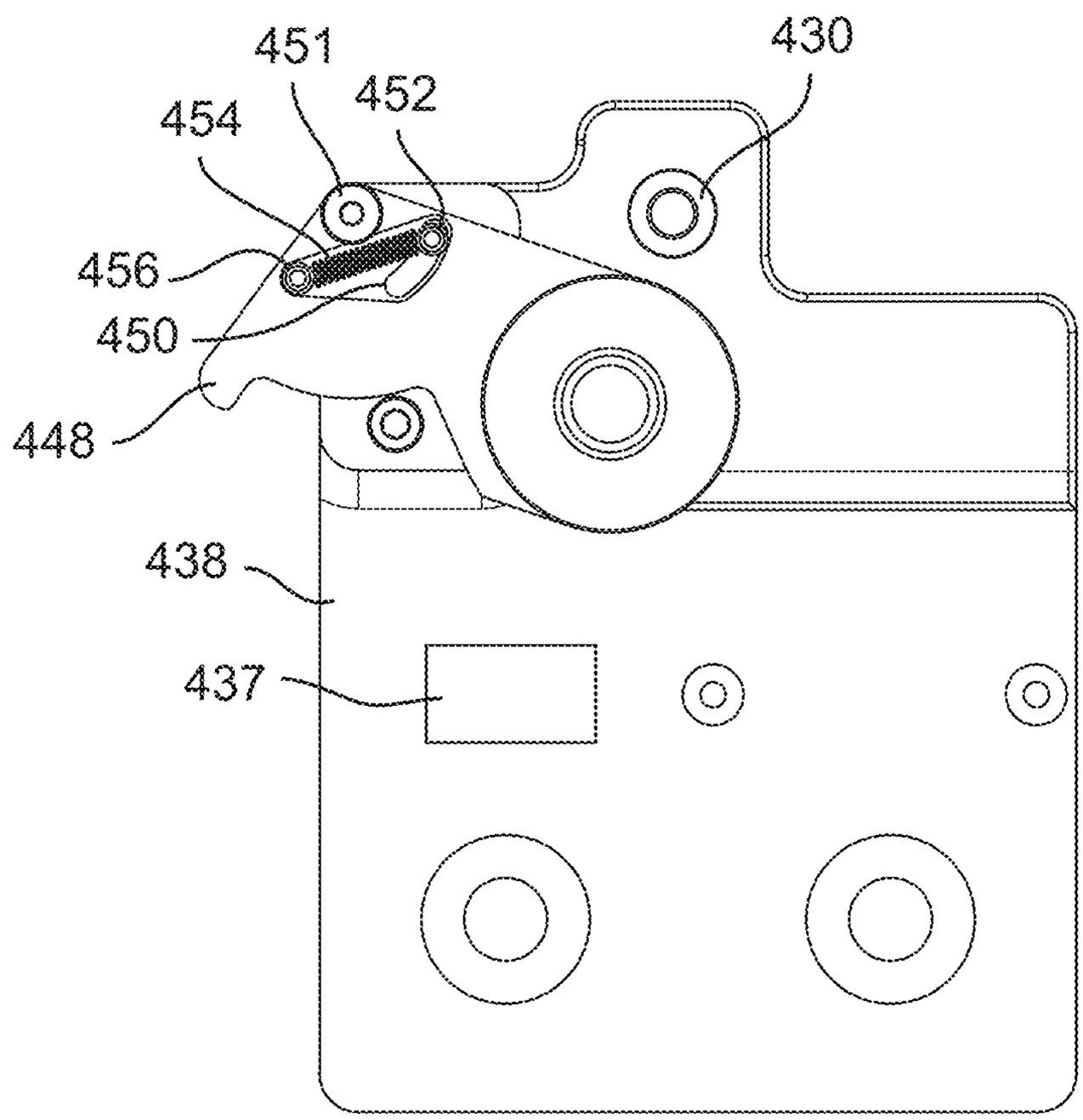

FIG. 71B

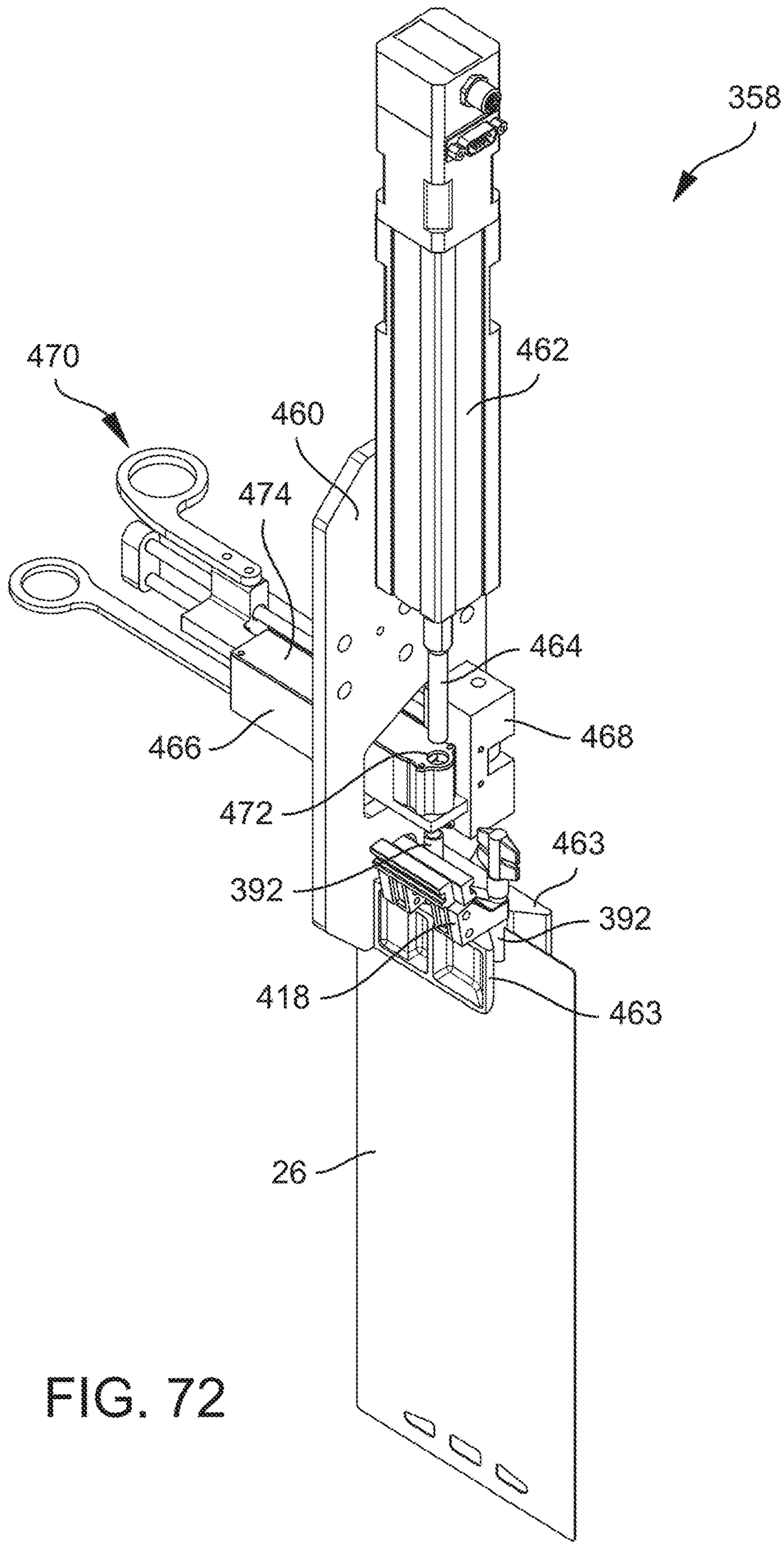

FIG. 72

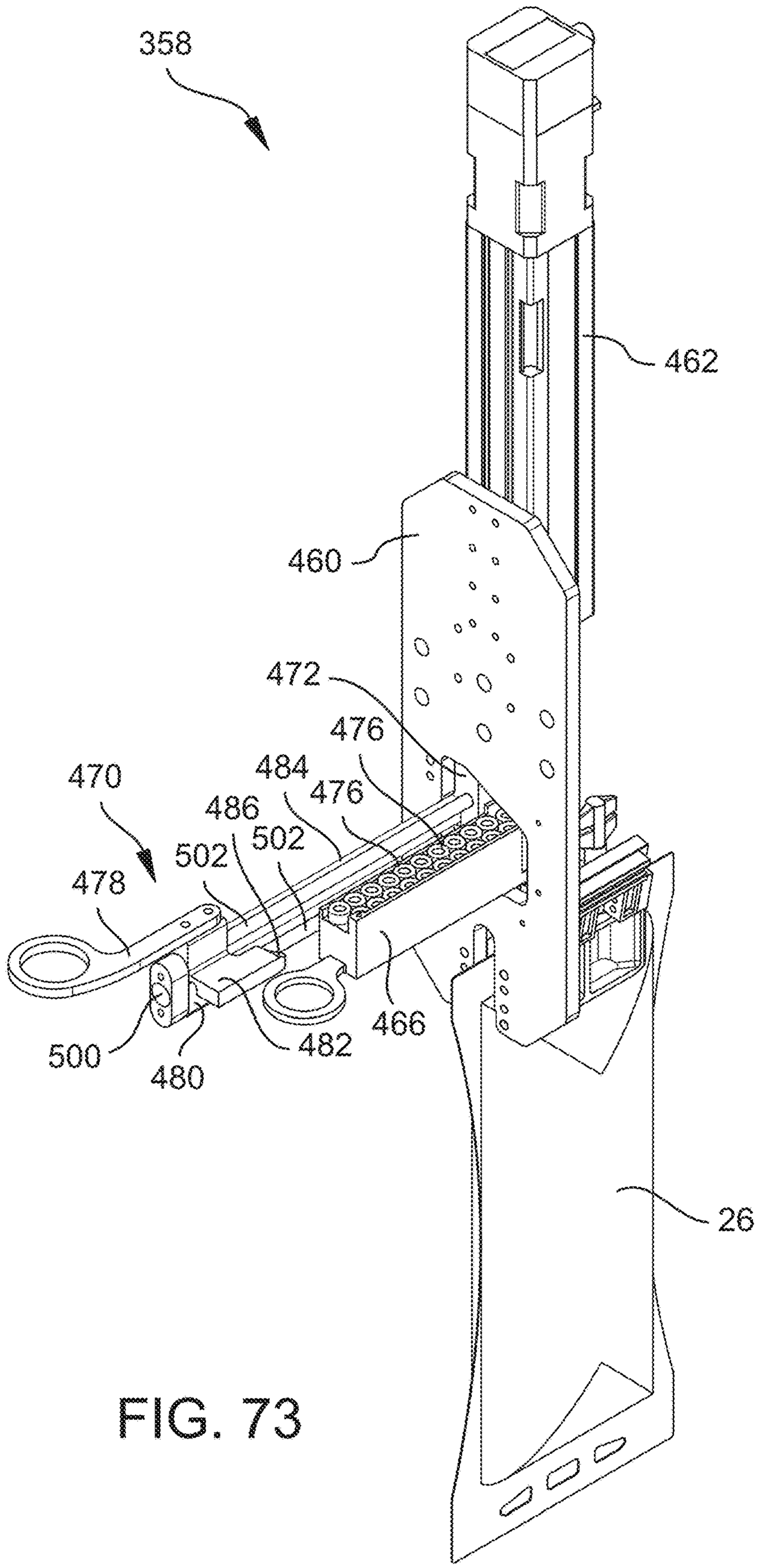
358
462
460
472
476
484
476
470
486
502
502
478
466
500
480
482
26

FIG. 73

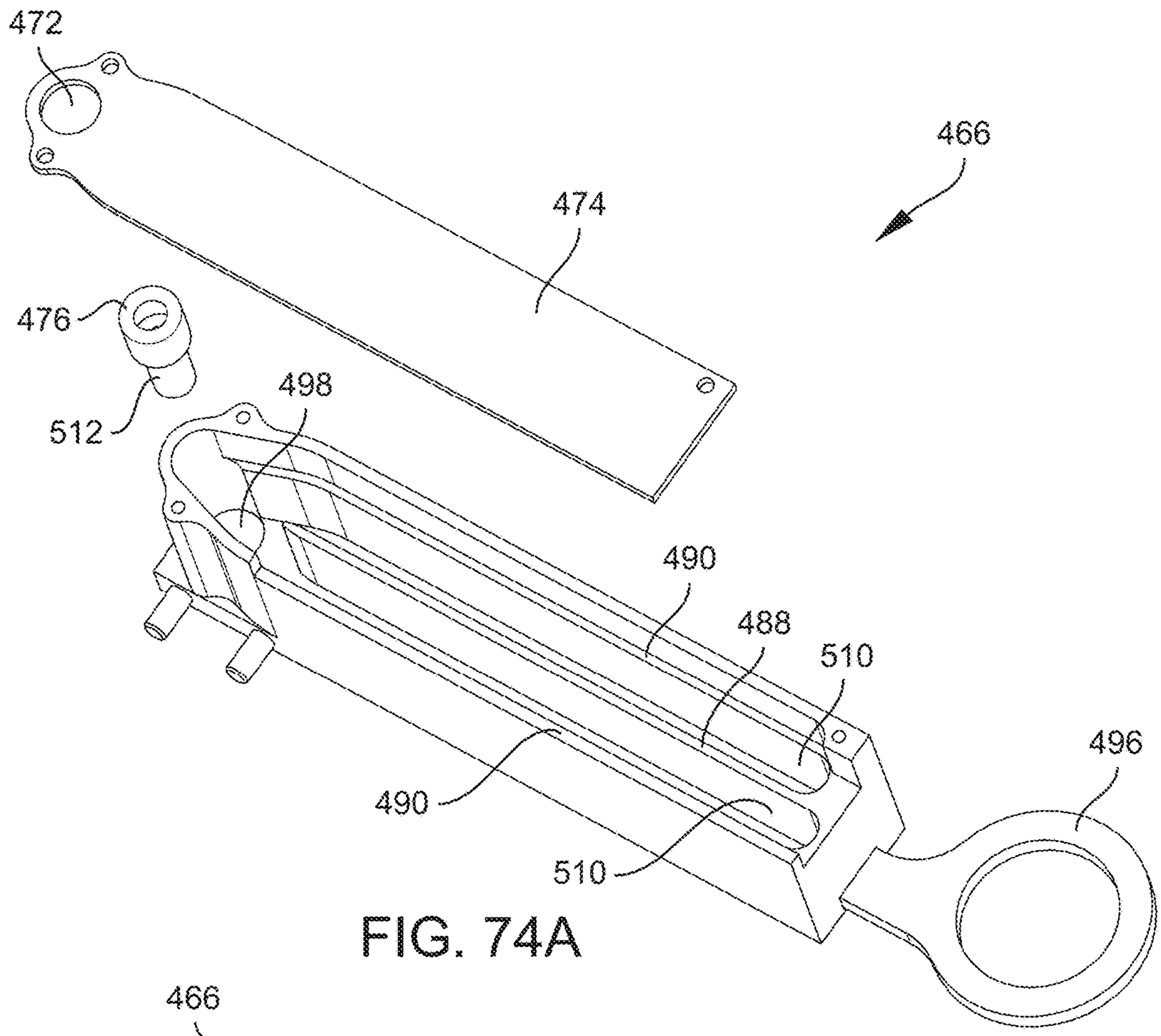

FIG. 74A

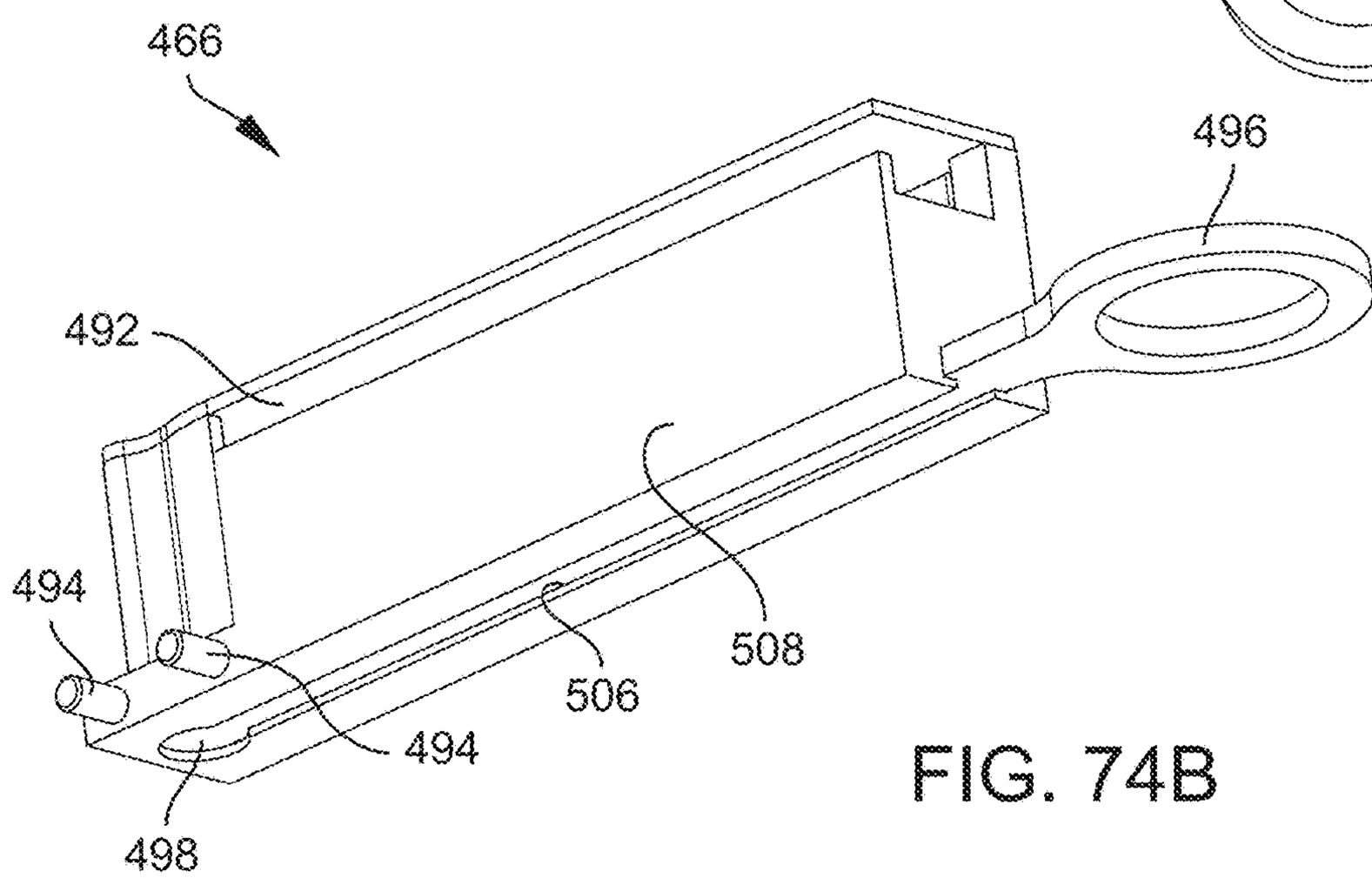

FIG. 74B

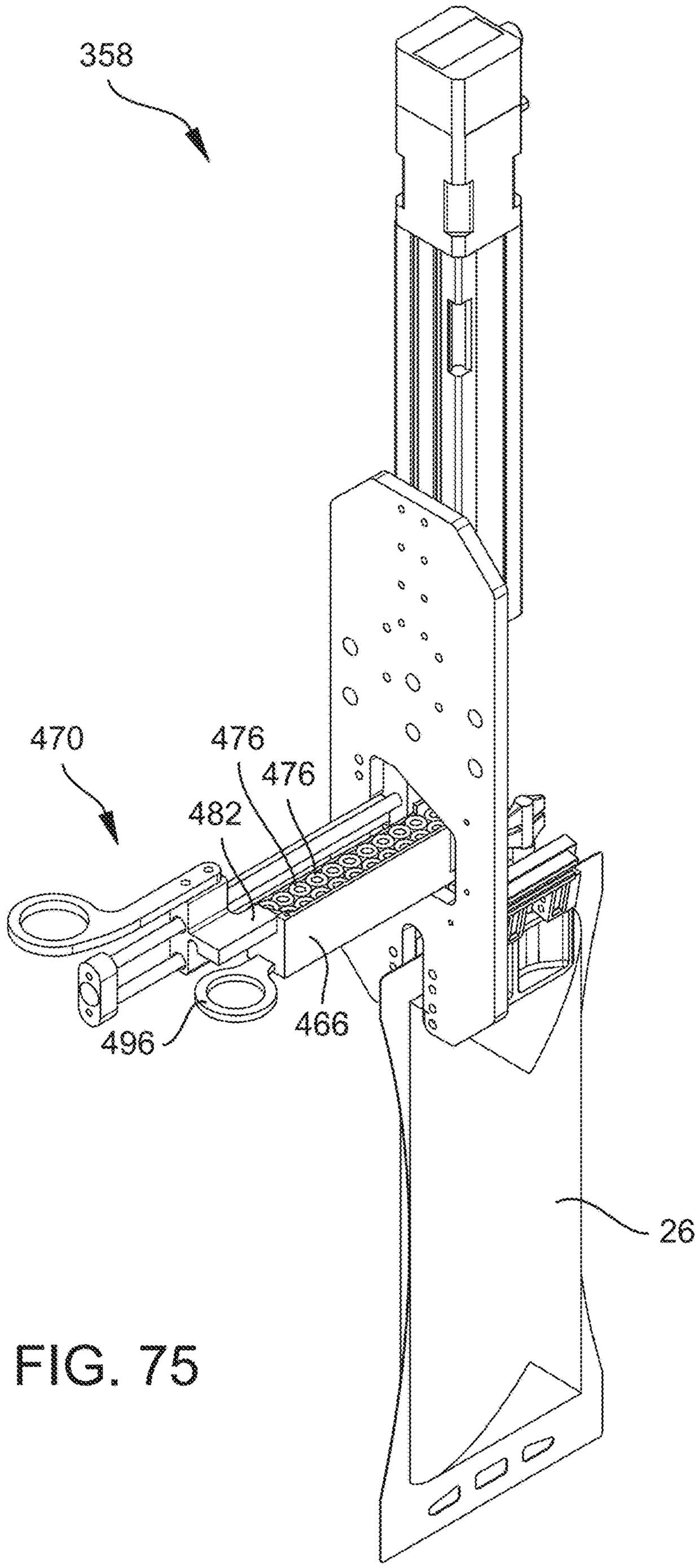

FIG. 75

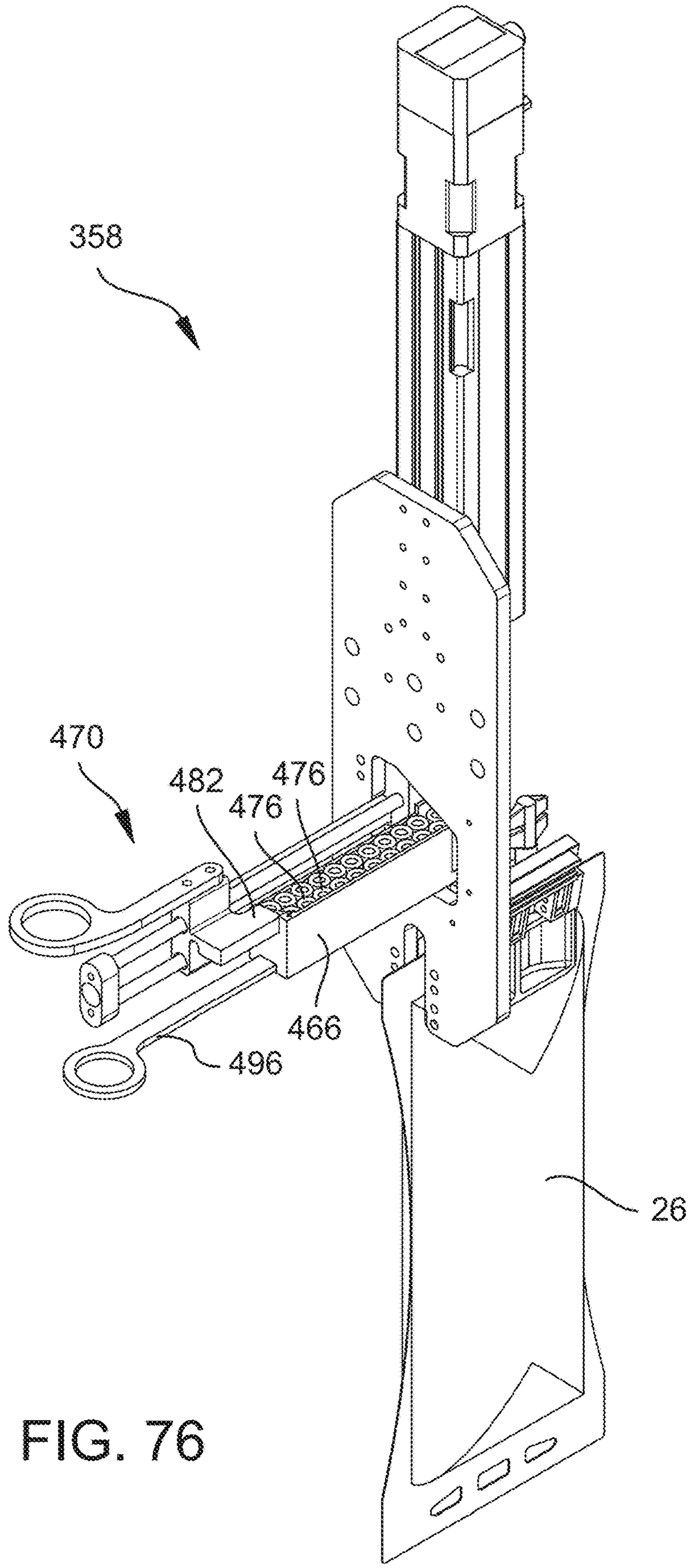

FIG. 76

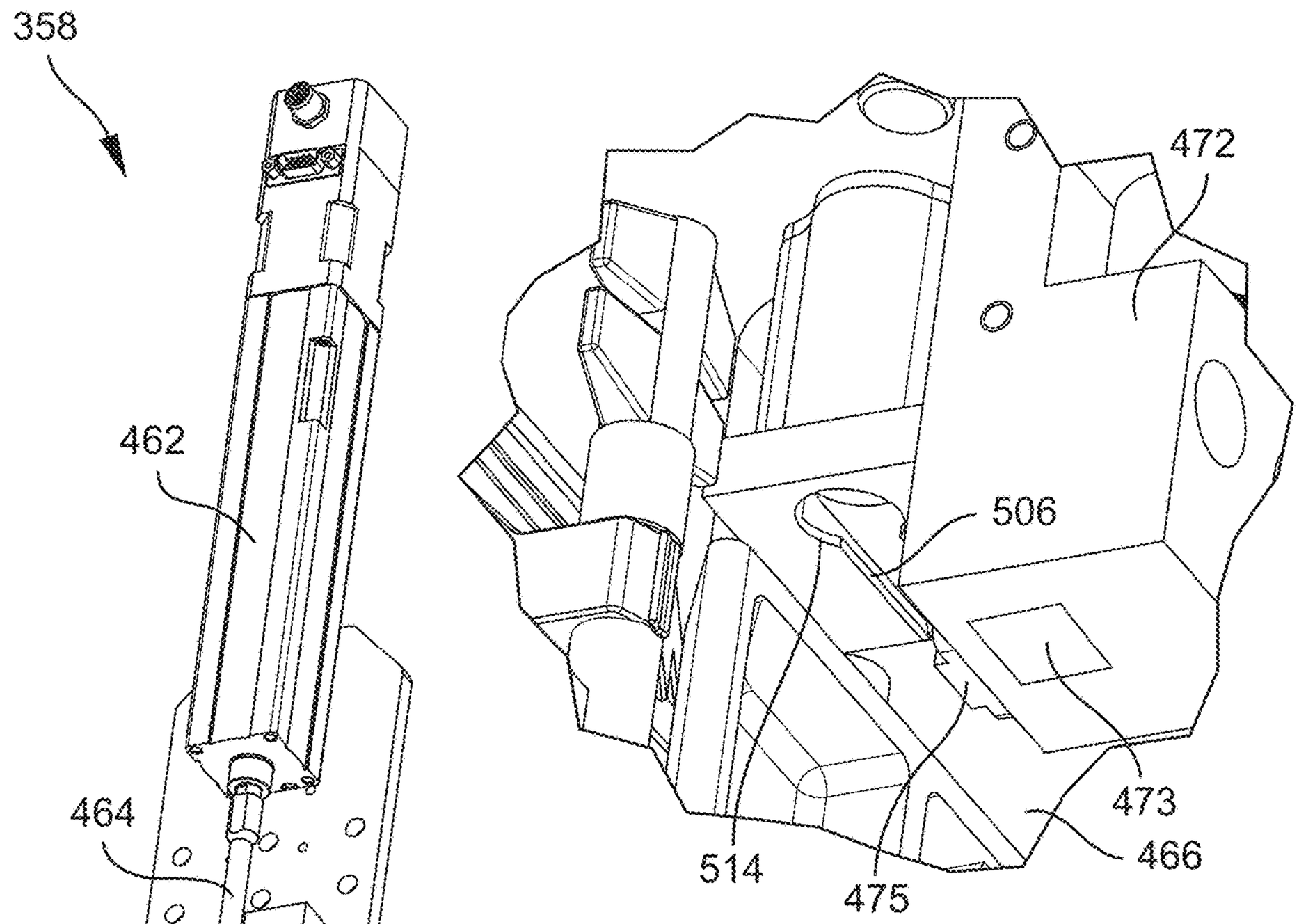

FIG. 77B

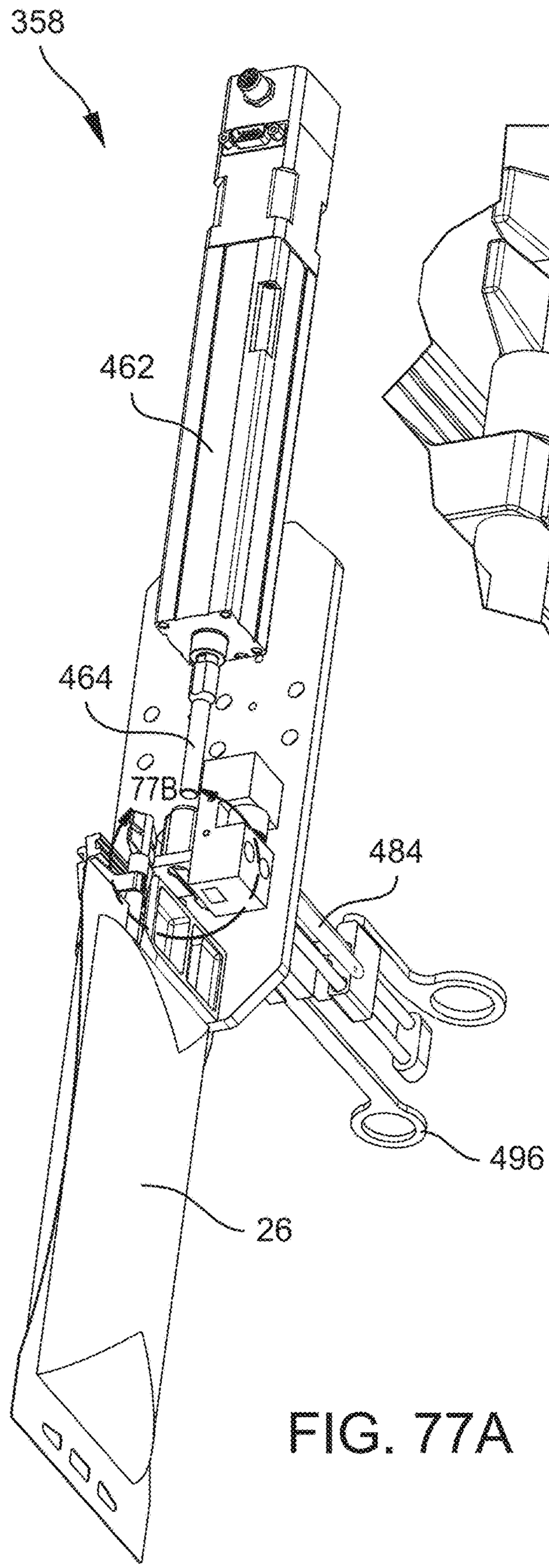

FIG. 77A

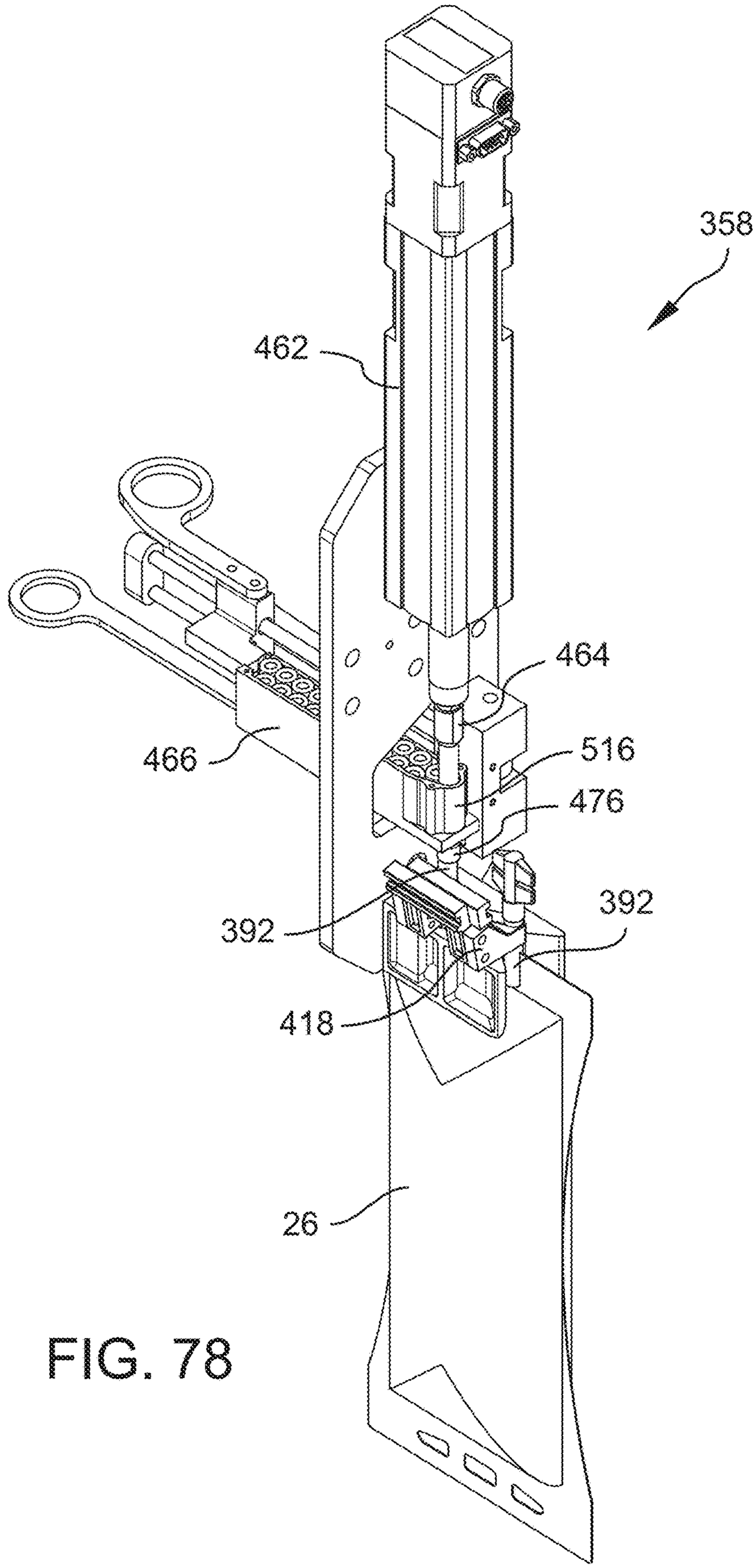

FIG. 78

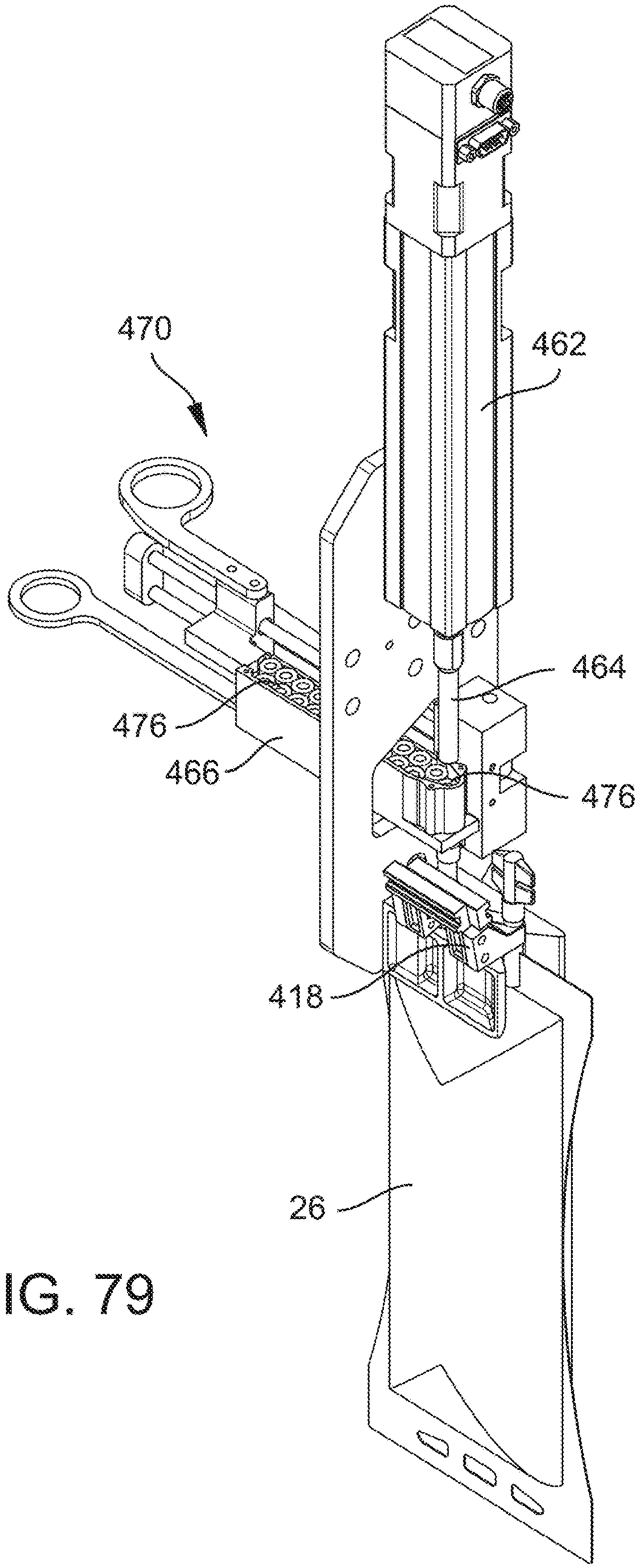

FIG. 79

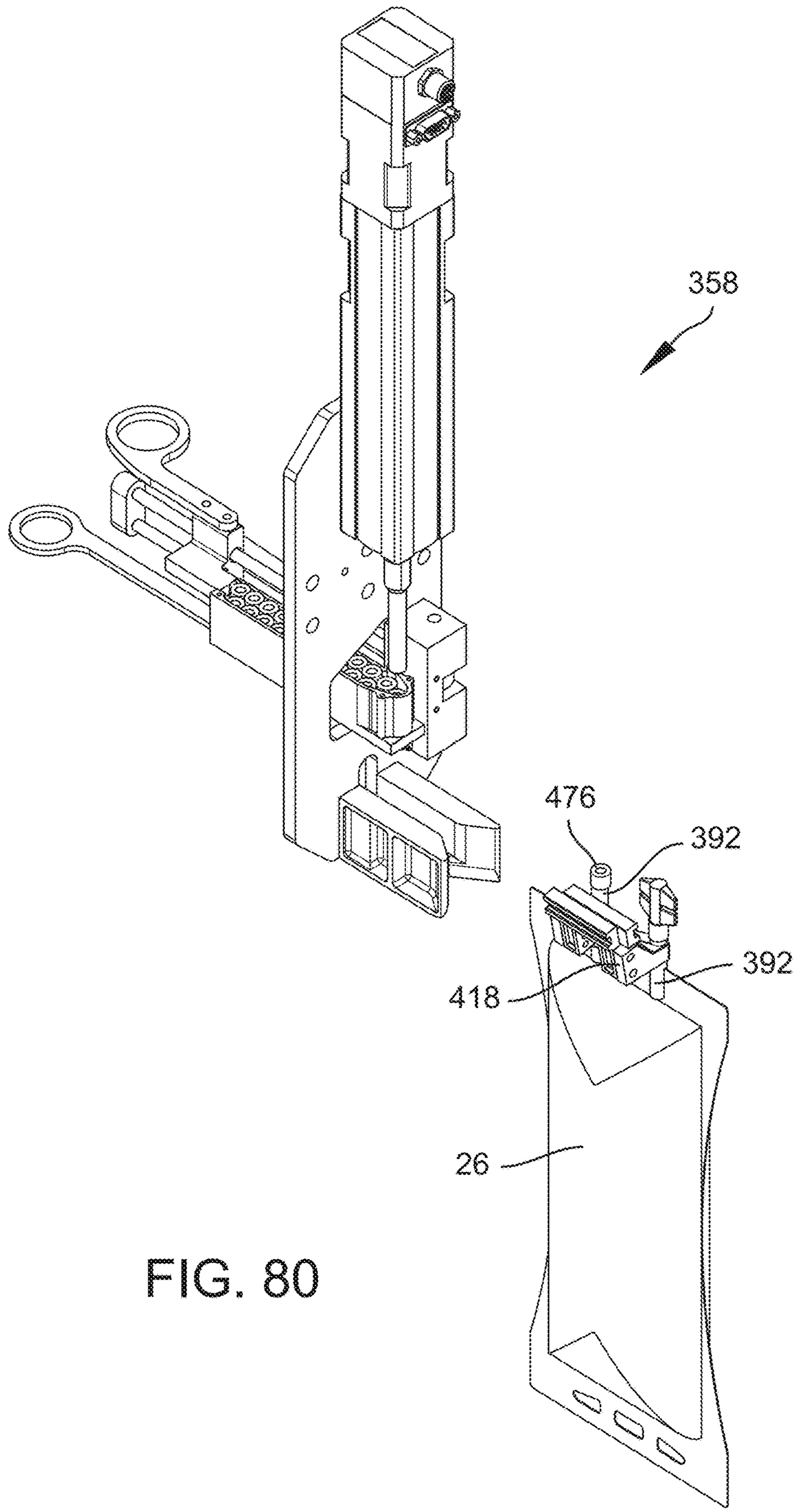

FIG. 80

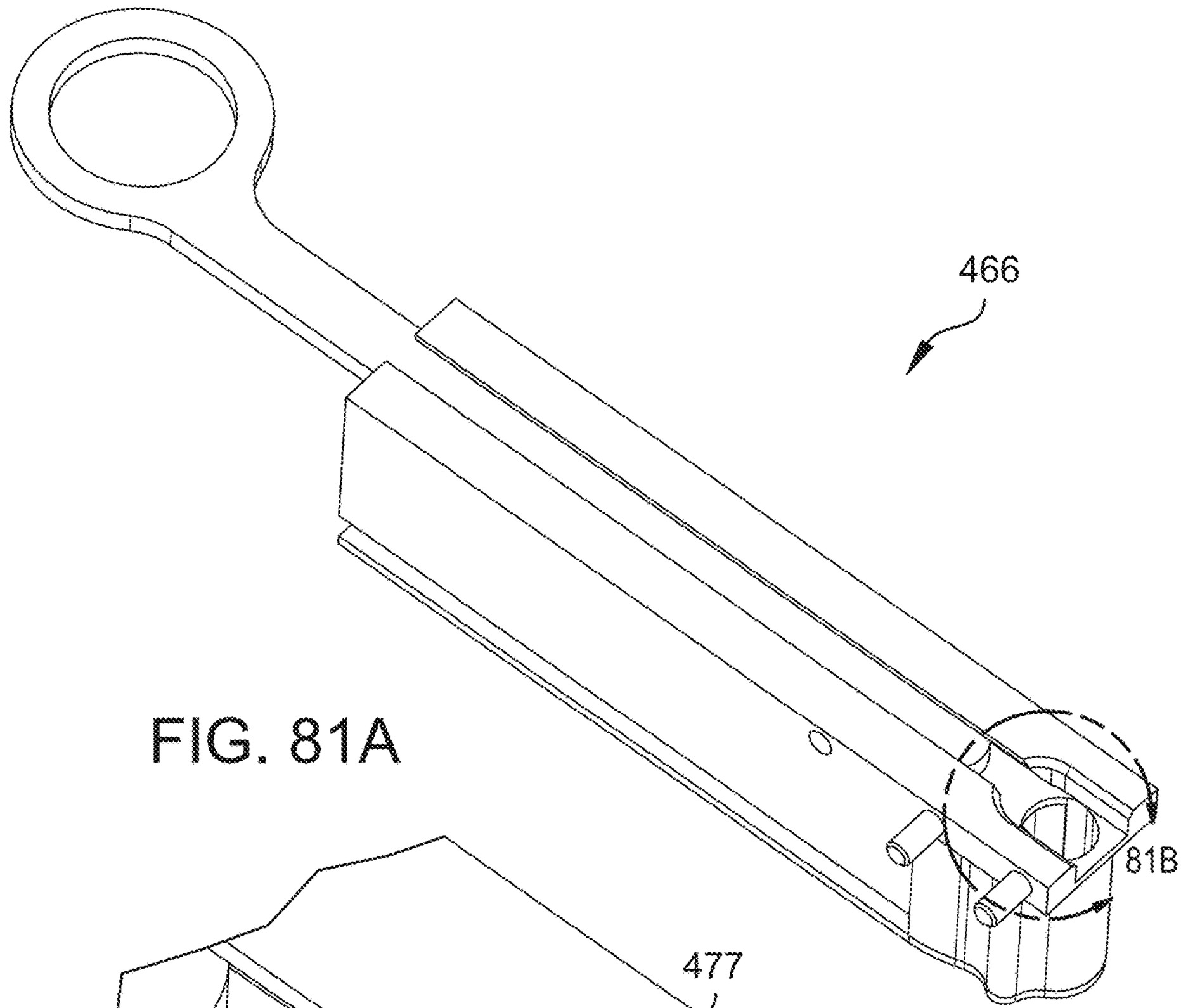

FIG. 81A

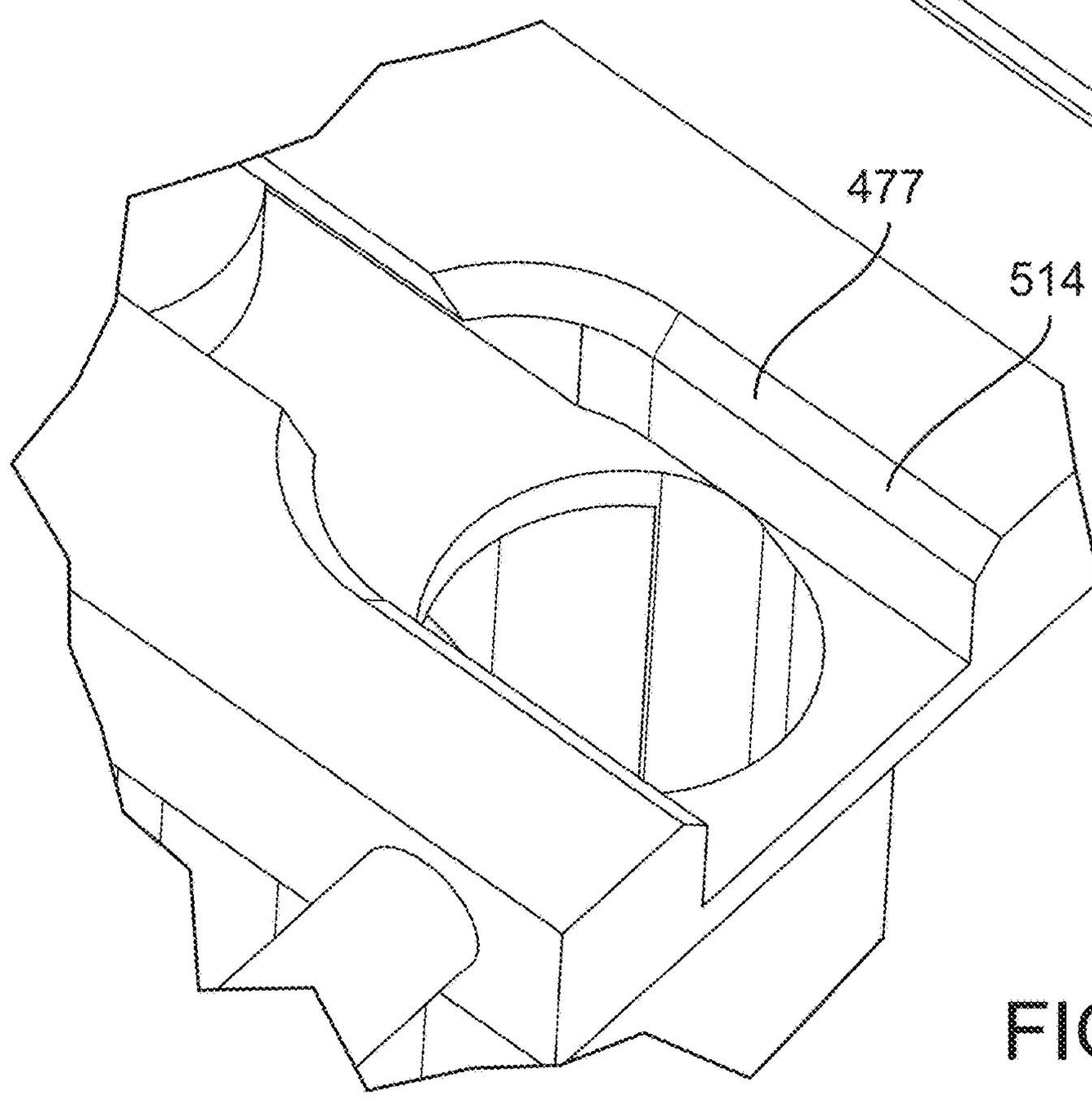

FIG. 81B

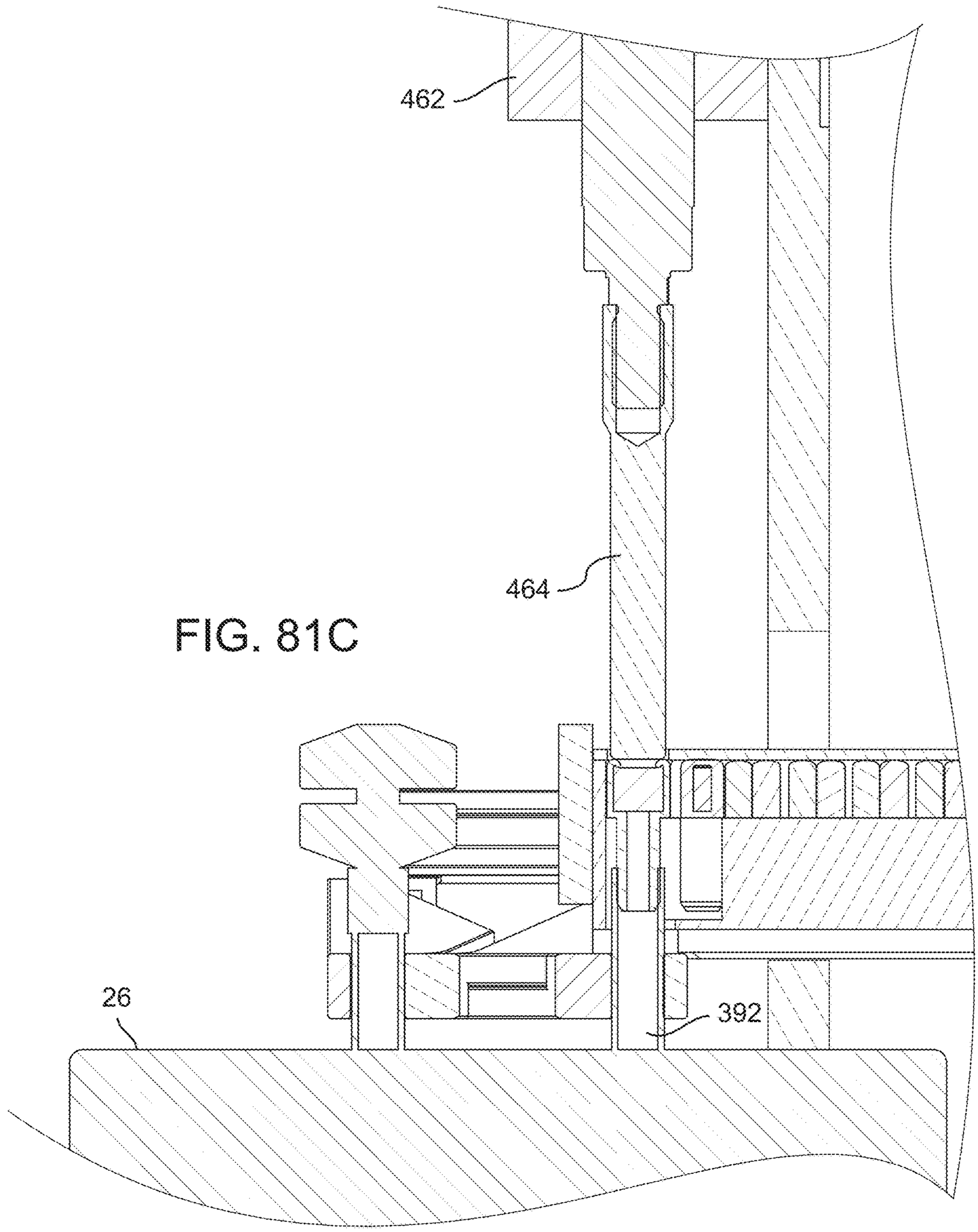

FIG. 81C

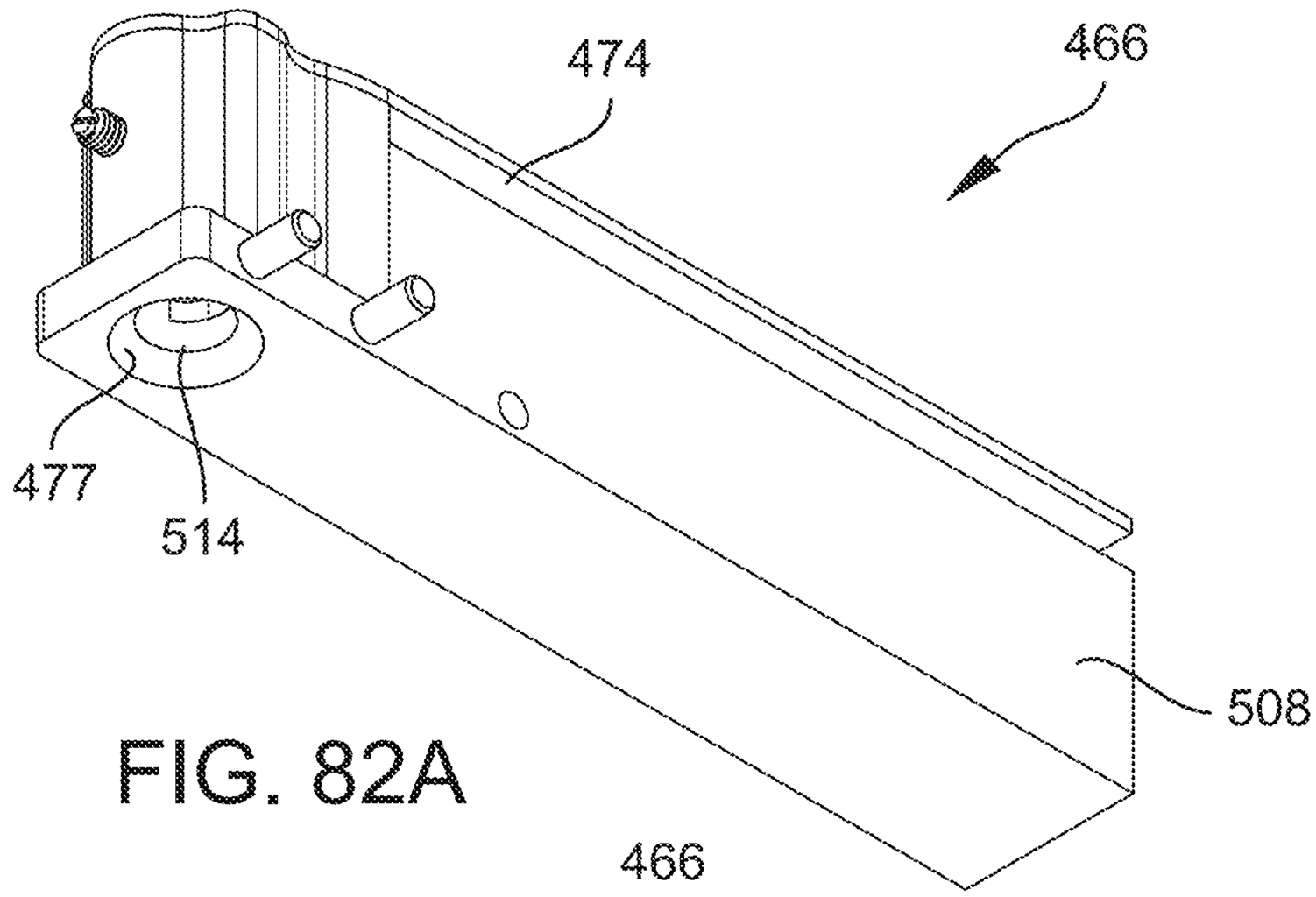

FIG. 82A

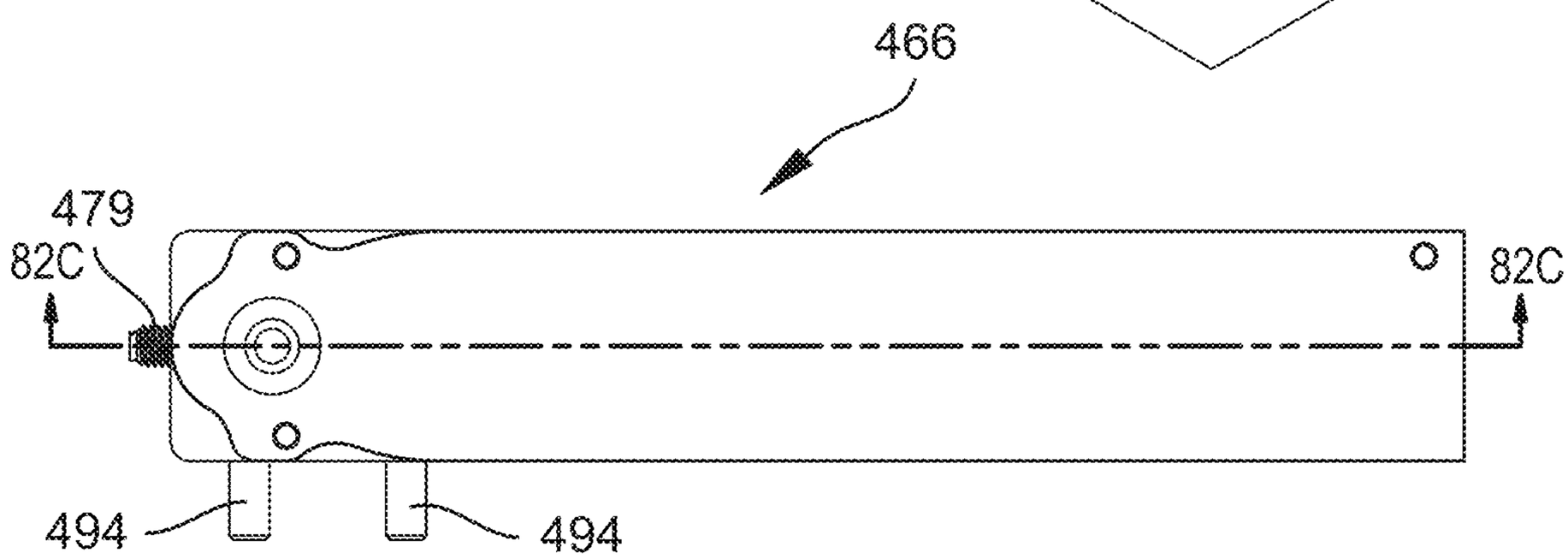

FIG. 82B

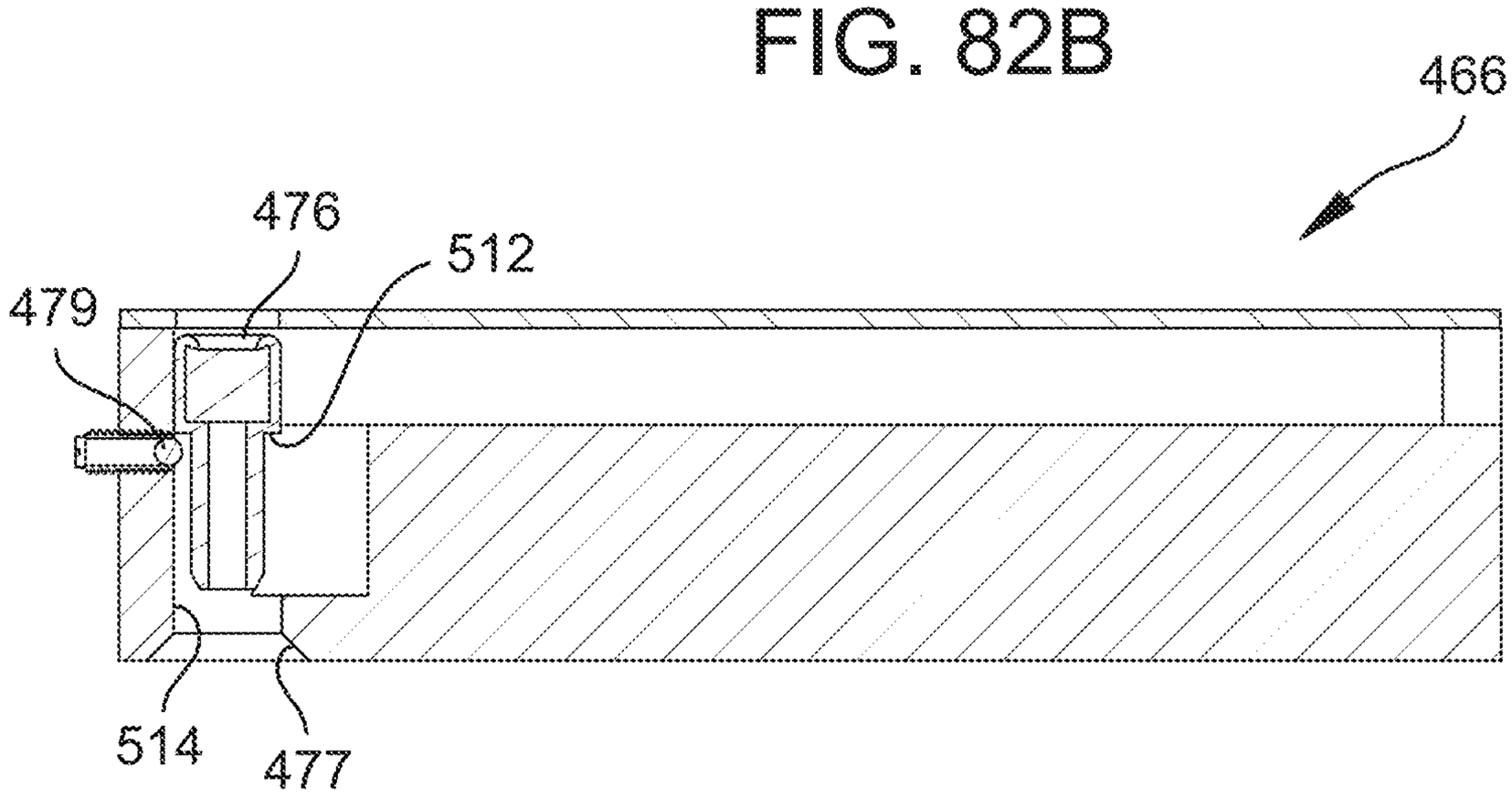

FIG. 82C

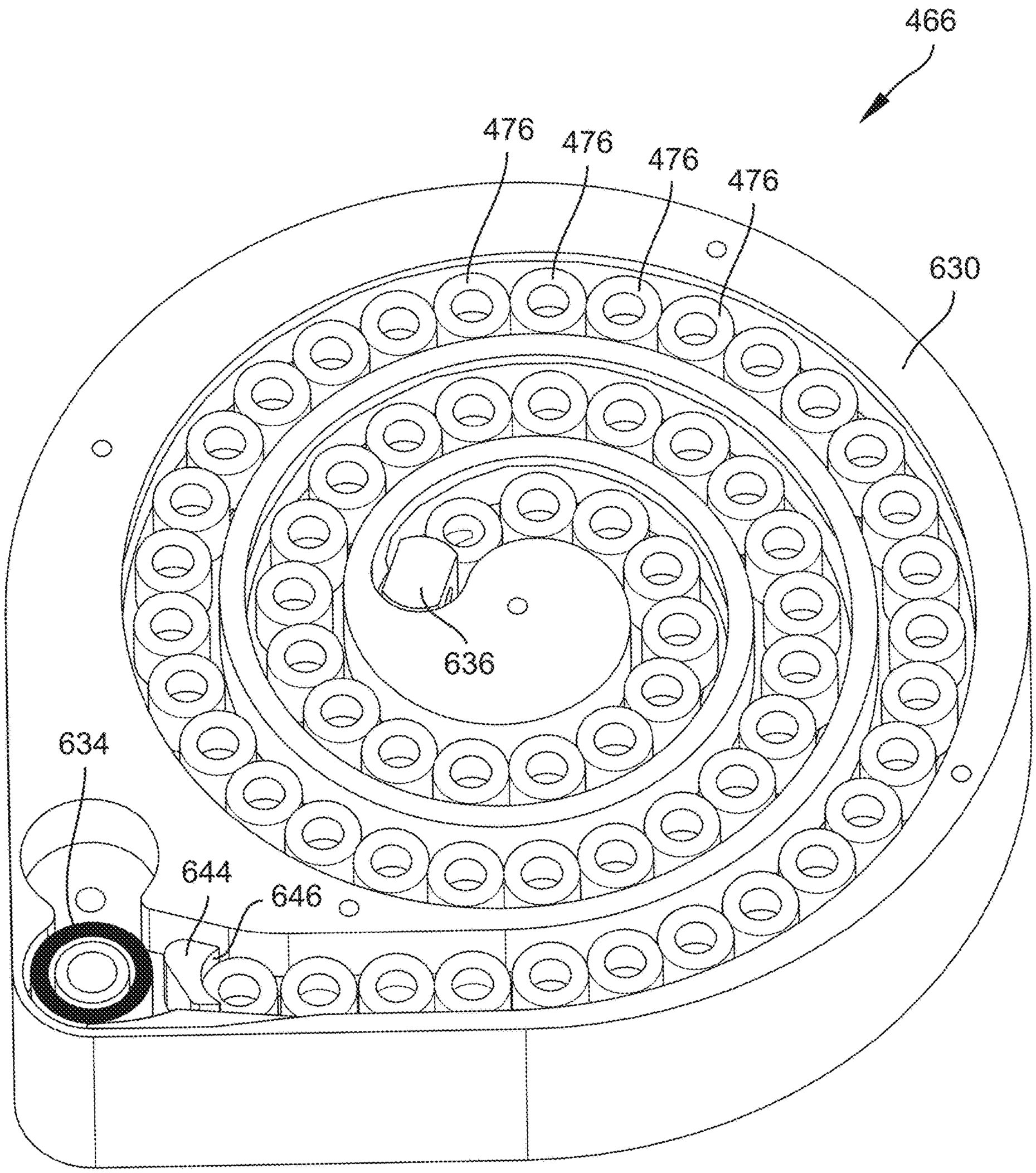

FIG. 83

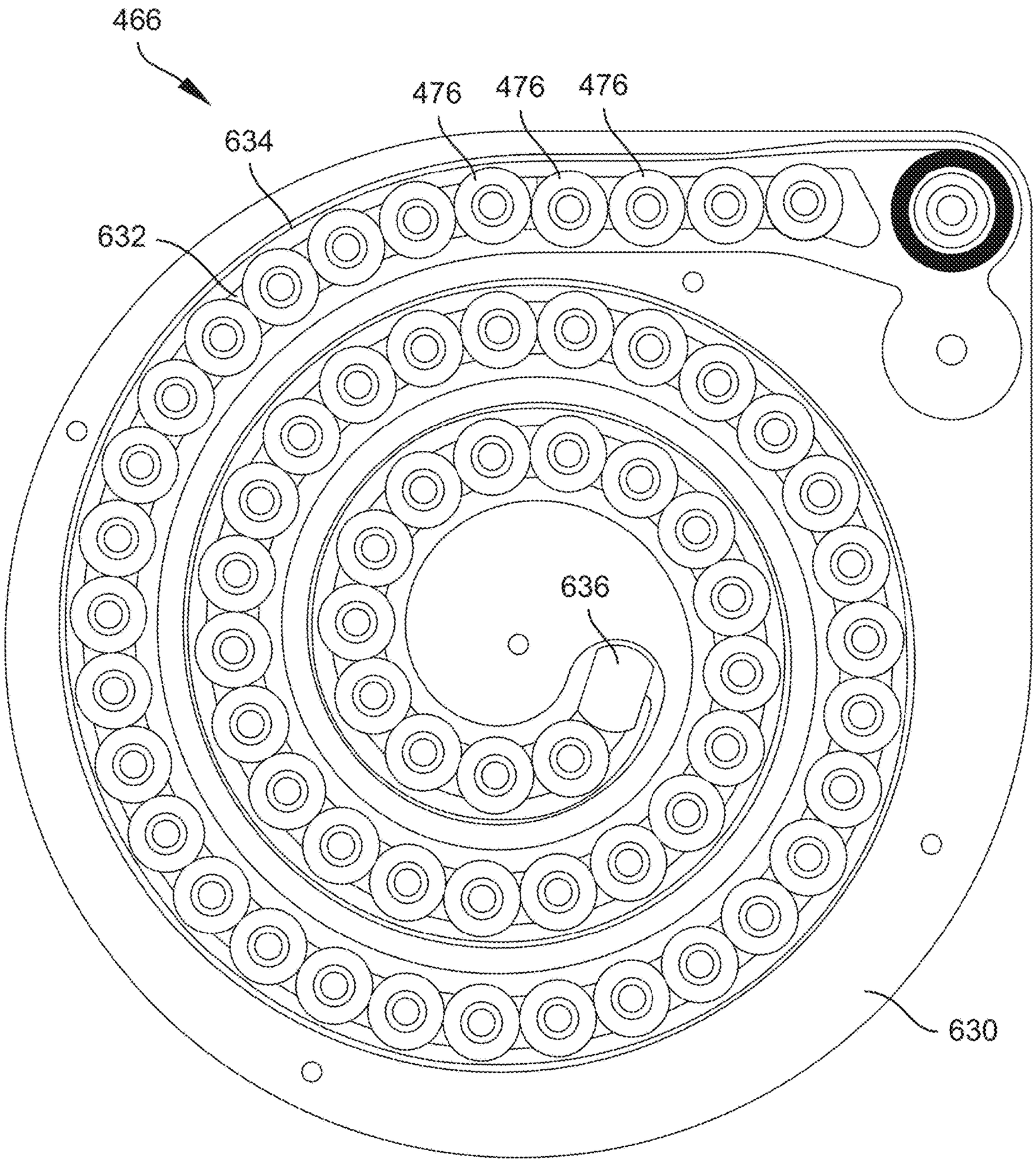

FIG. 84

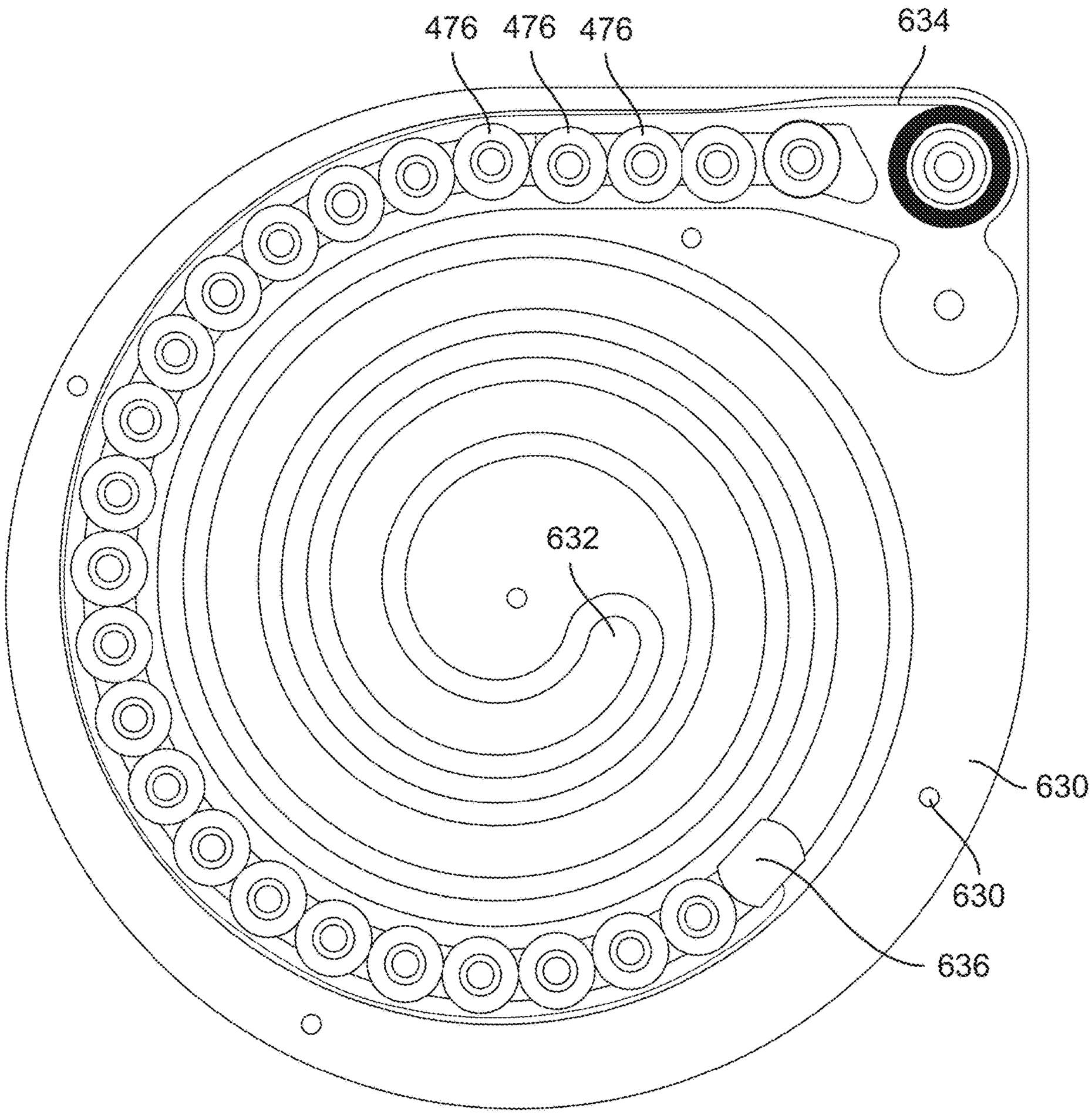

FIG. 85

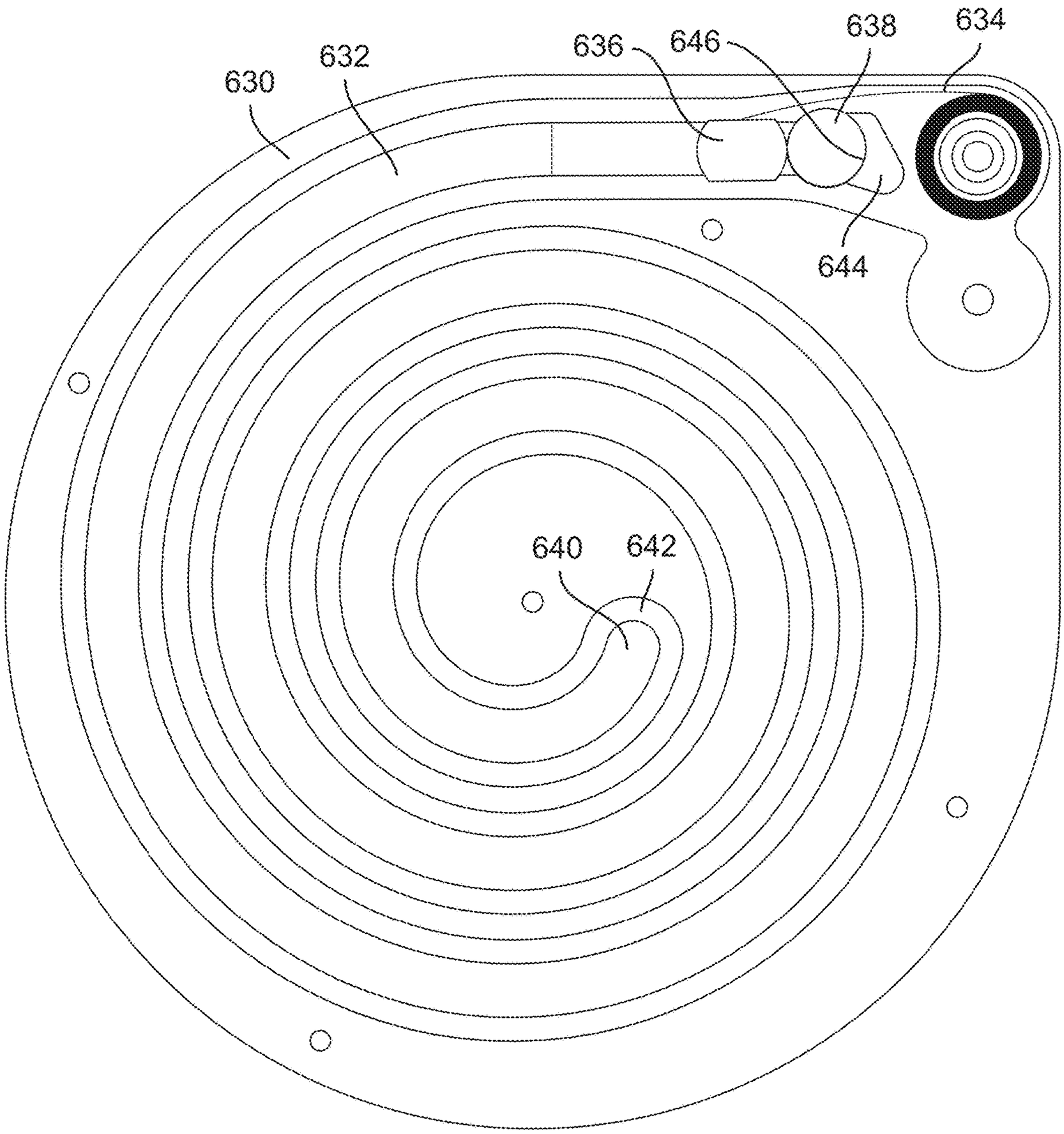

FIG. 86

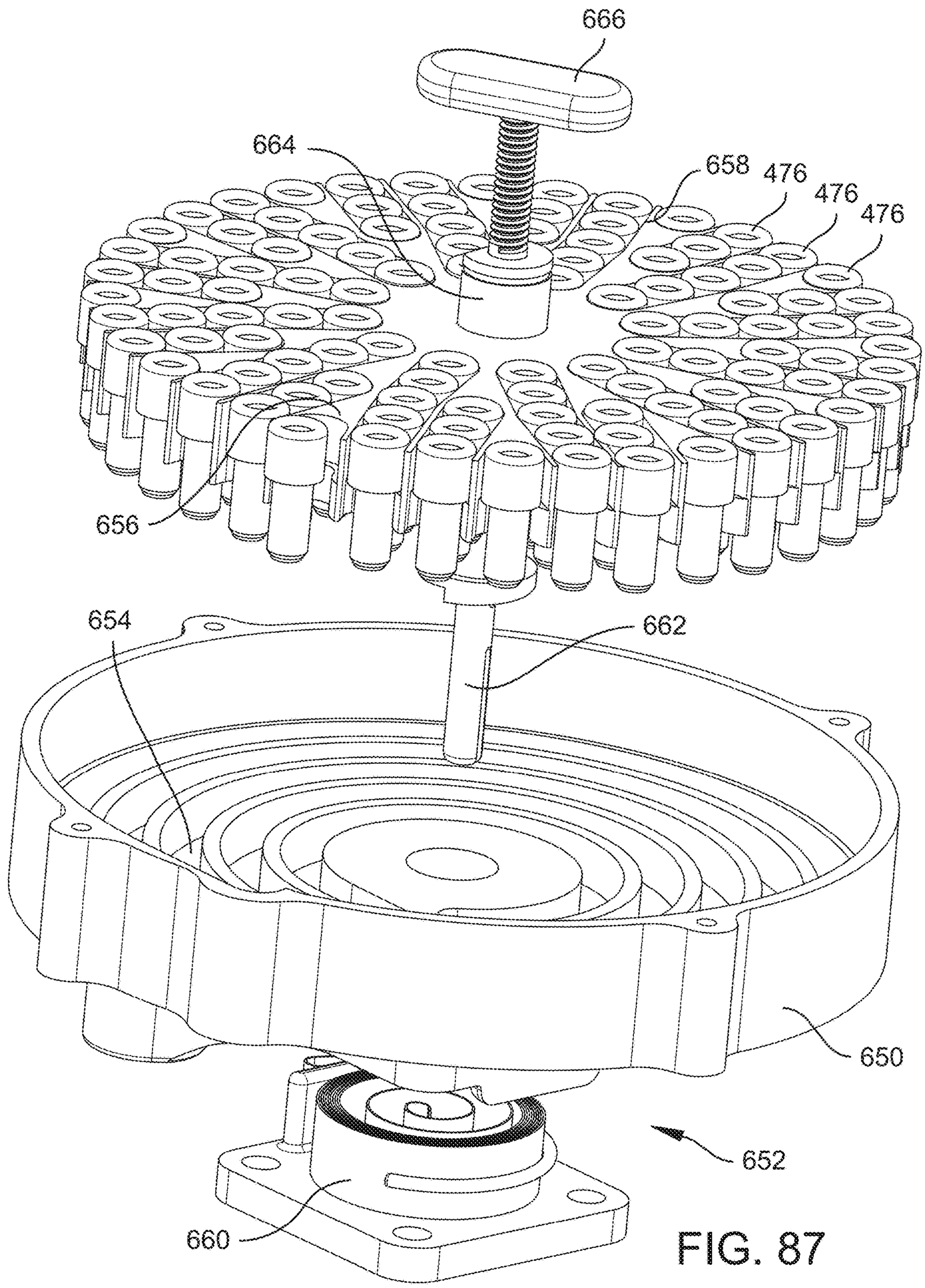

FIG. 87

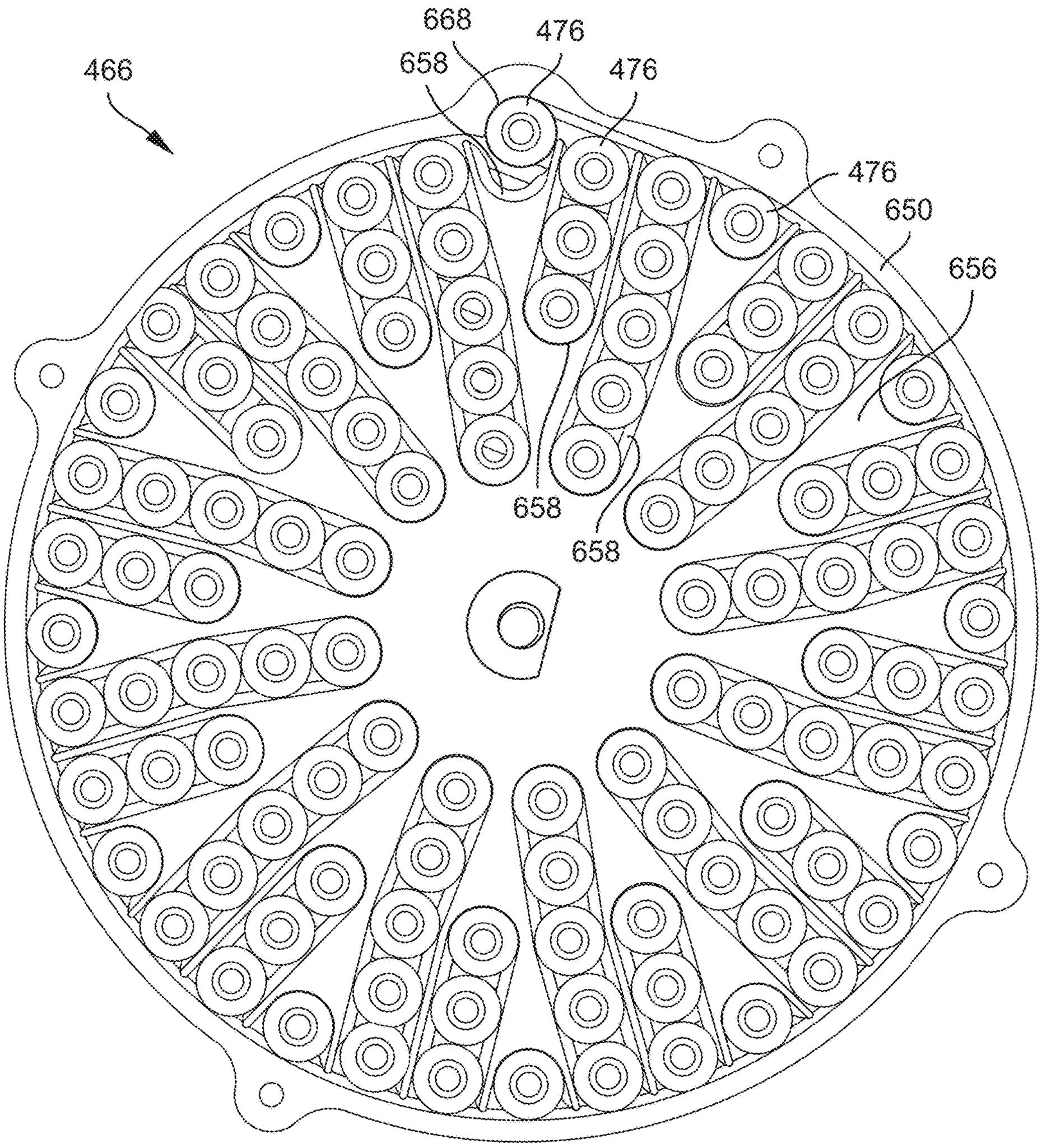

FIG. 88

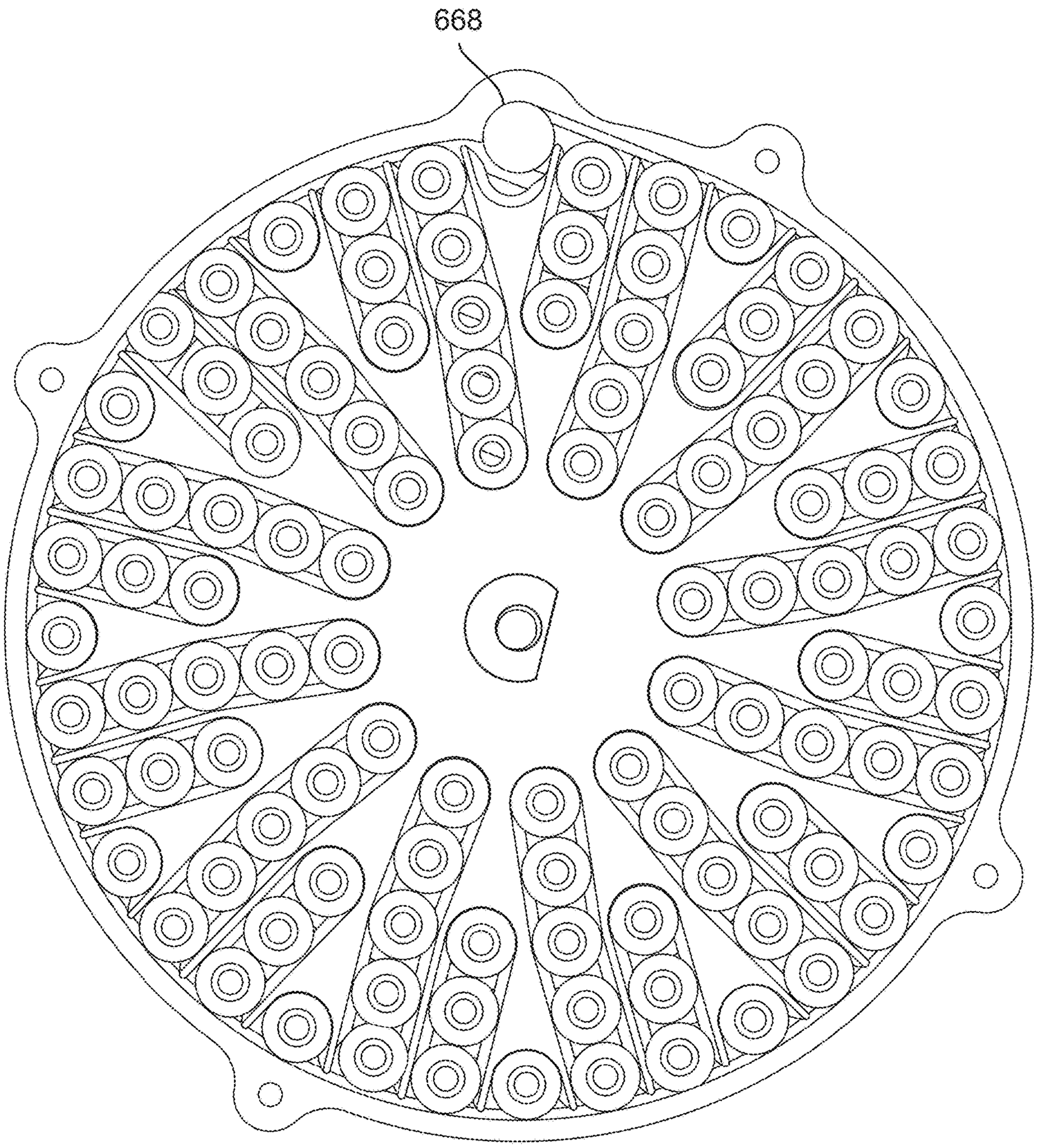

FIG. 89

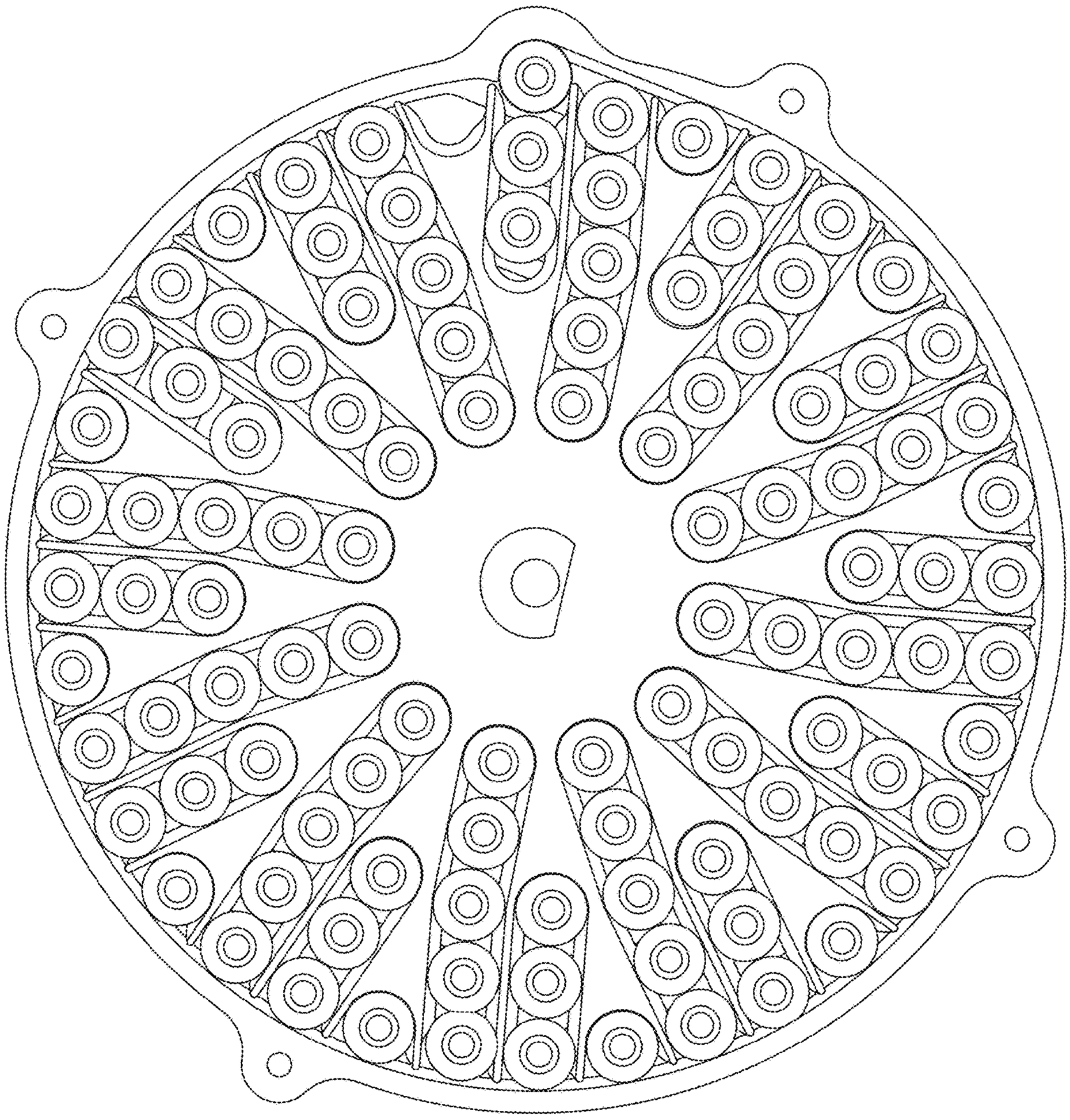

FIG. 90

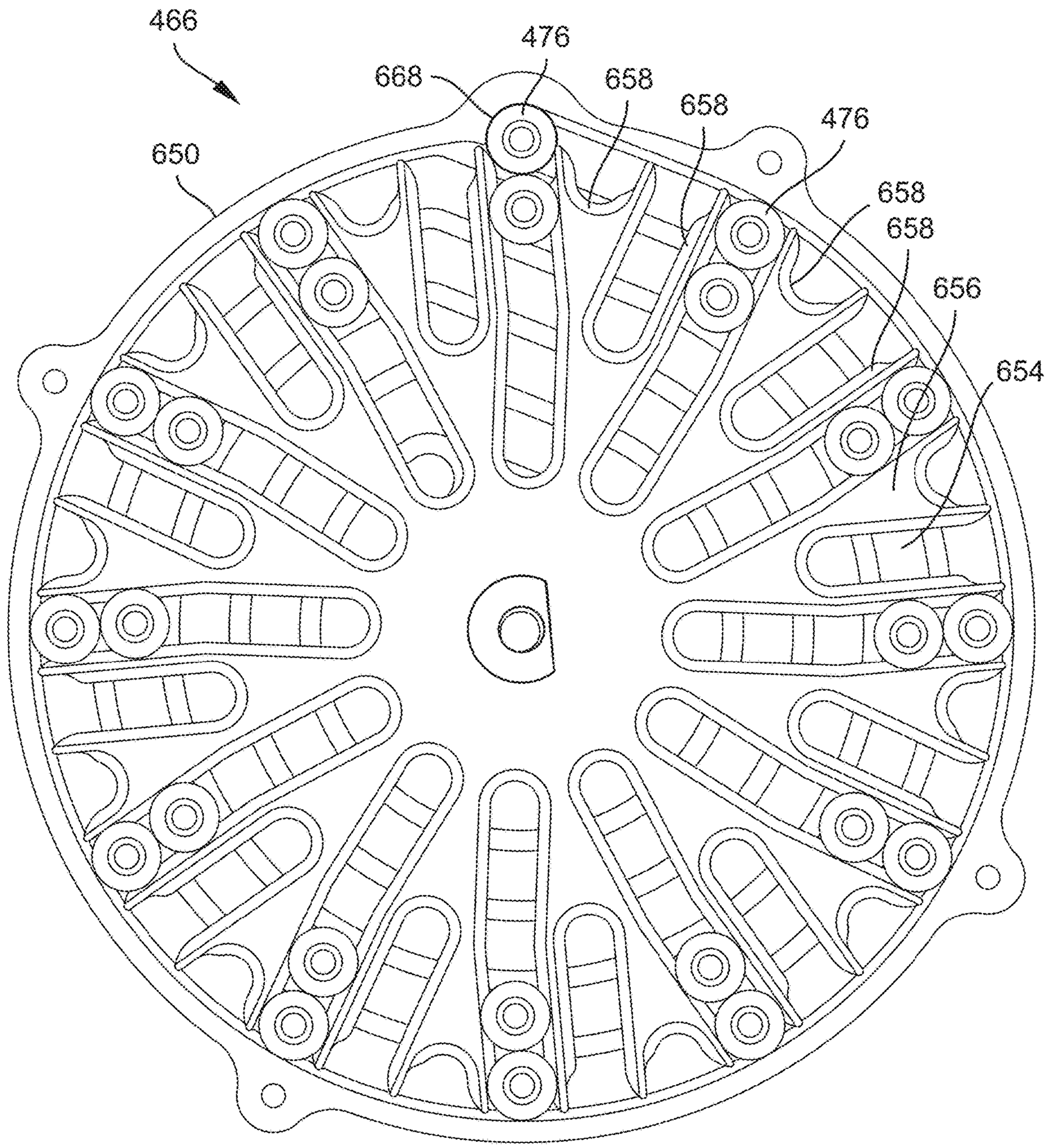

FIG. 91

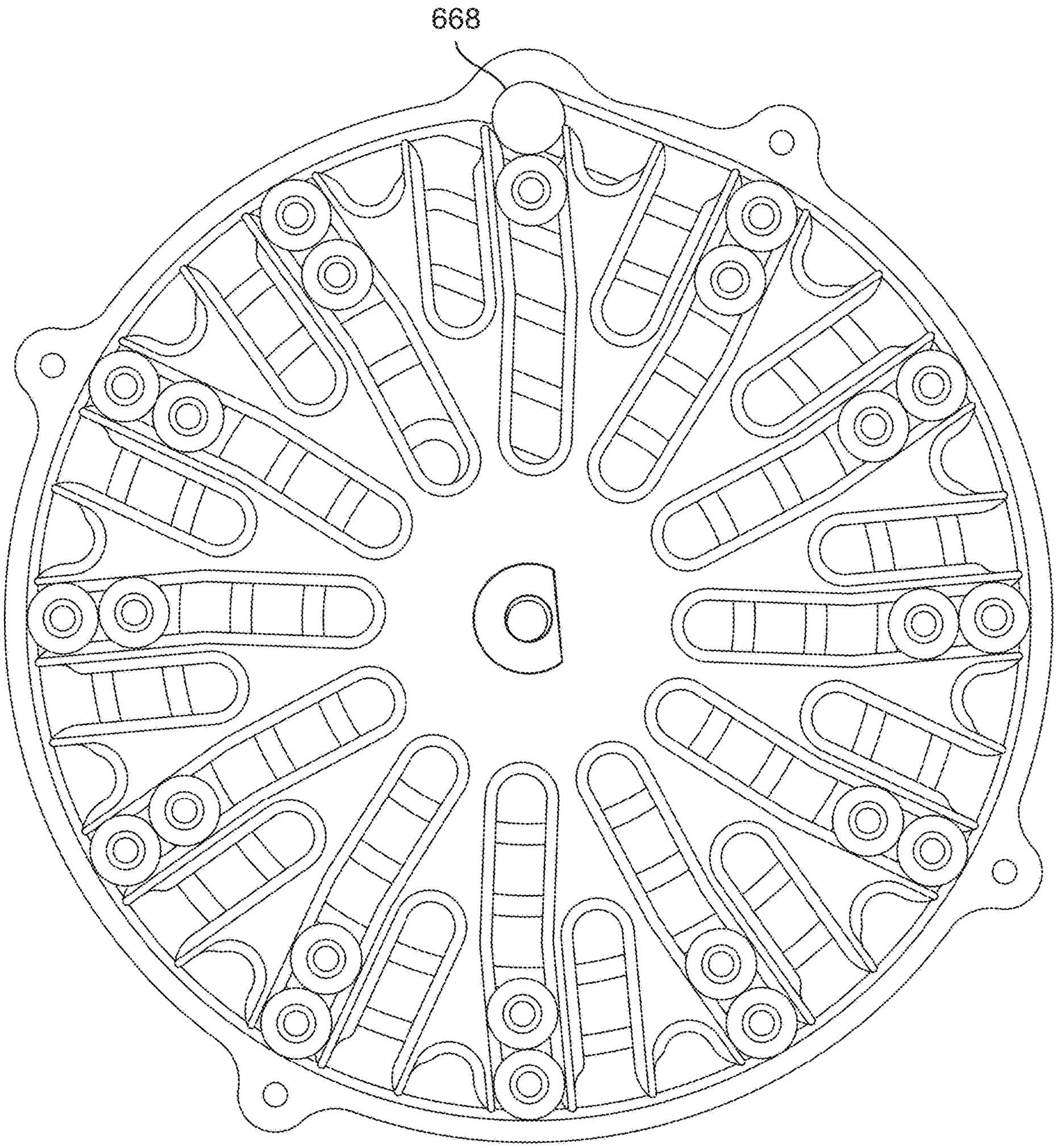

FIG. 92

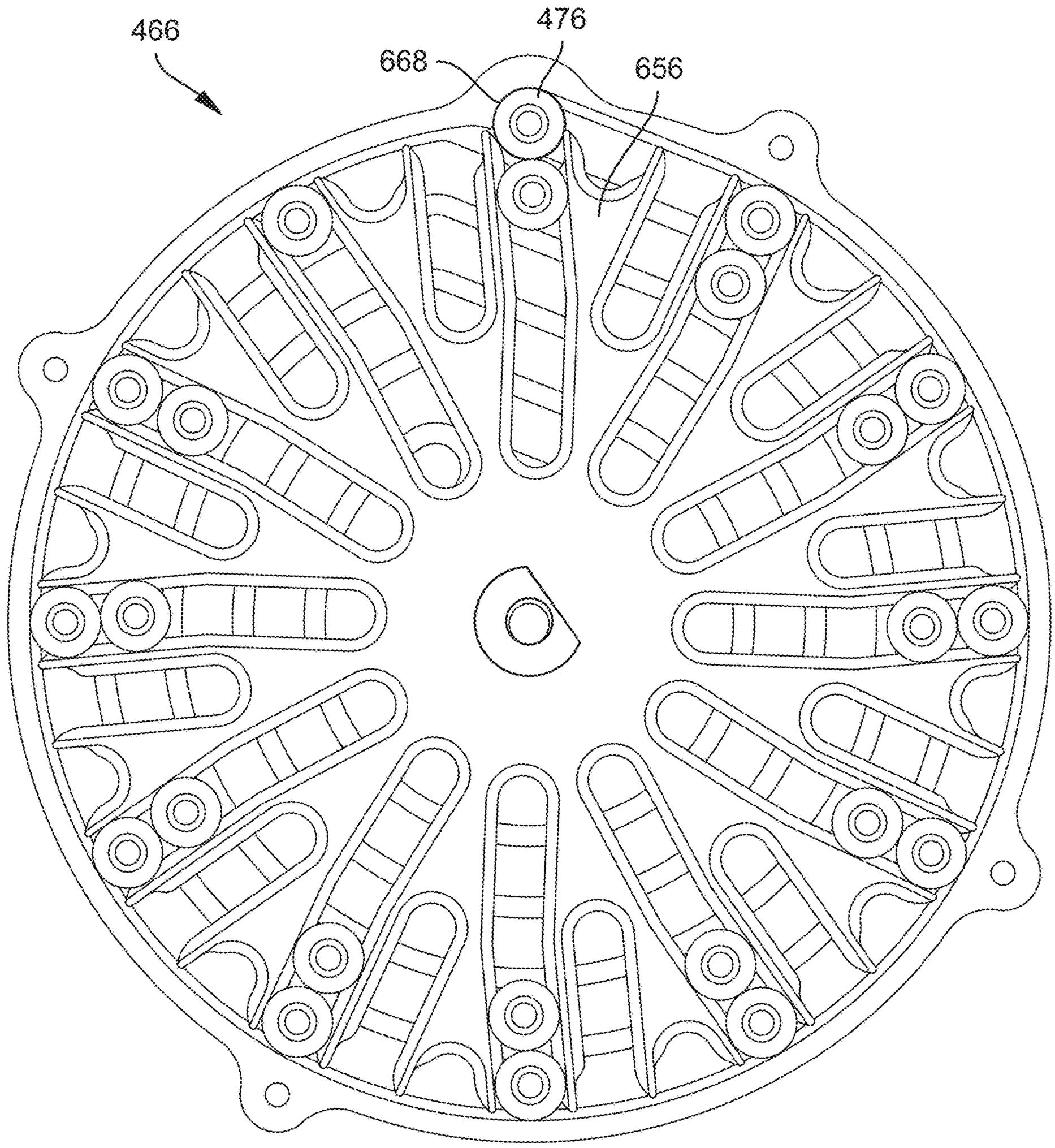

FIG. 93

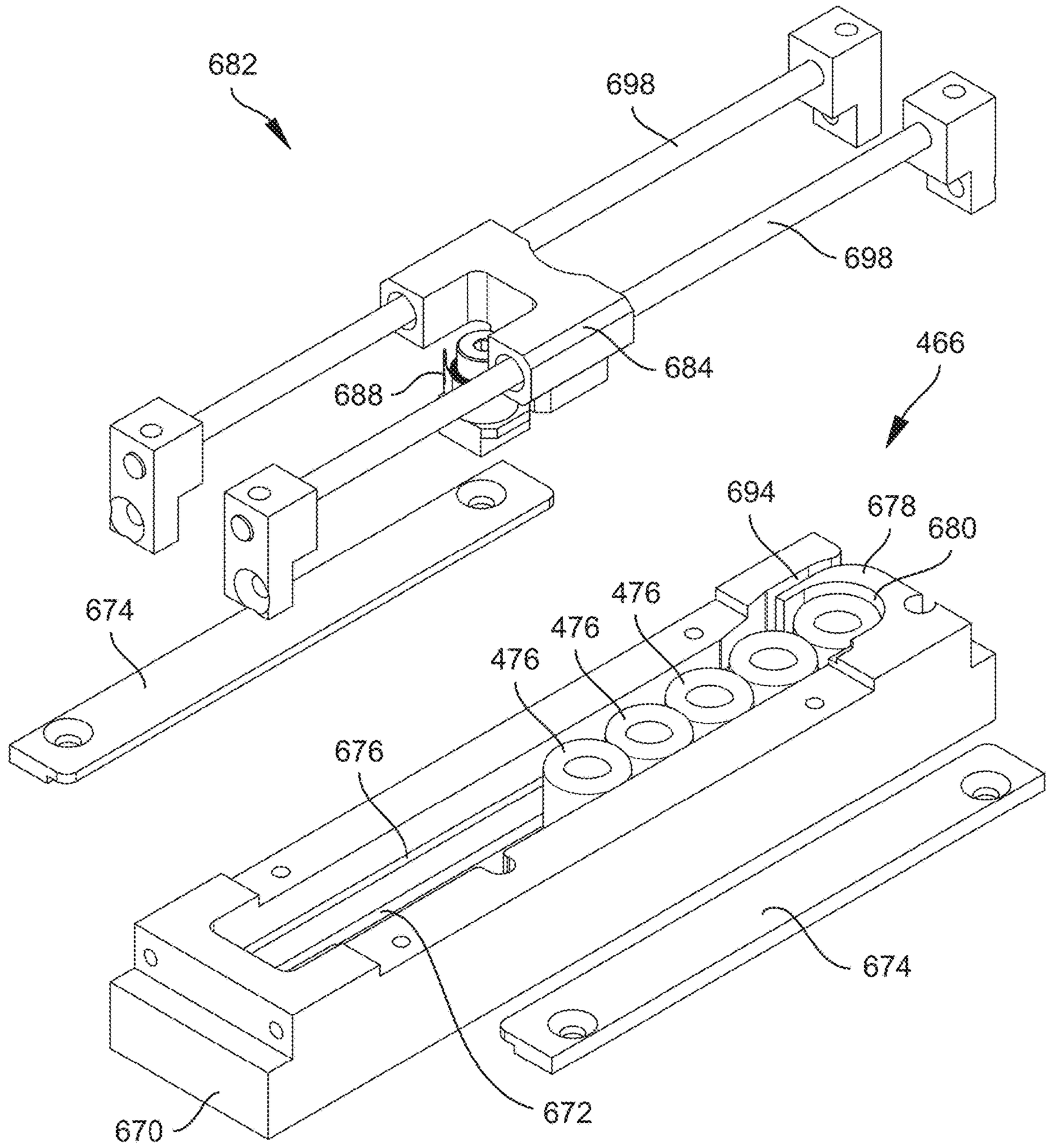
682
698
698
684
688
466
694
678
680
674
476
476
476
676
674
672
670

FIG. 94

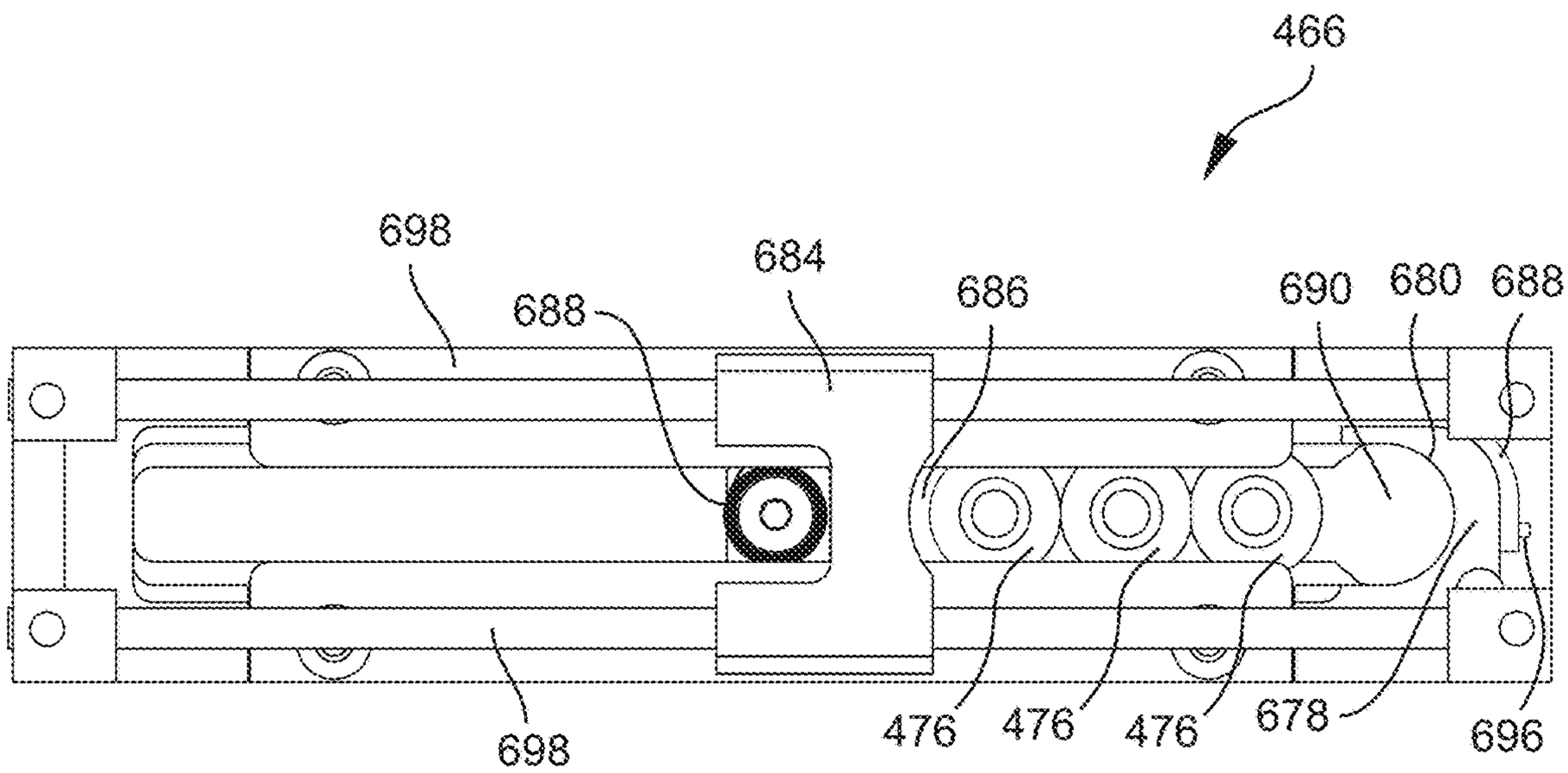
466
698
688
684
686
690
680
688
698
476
476
476
678
696

FIG. 95

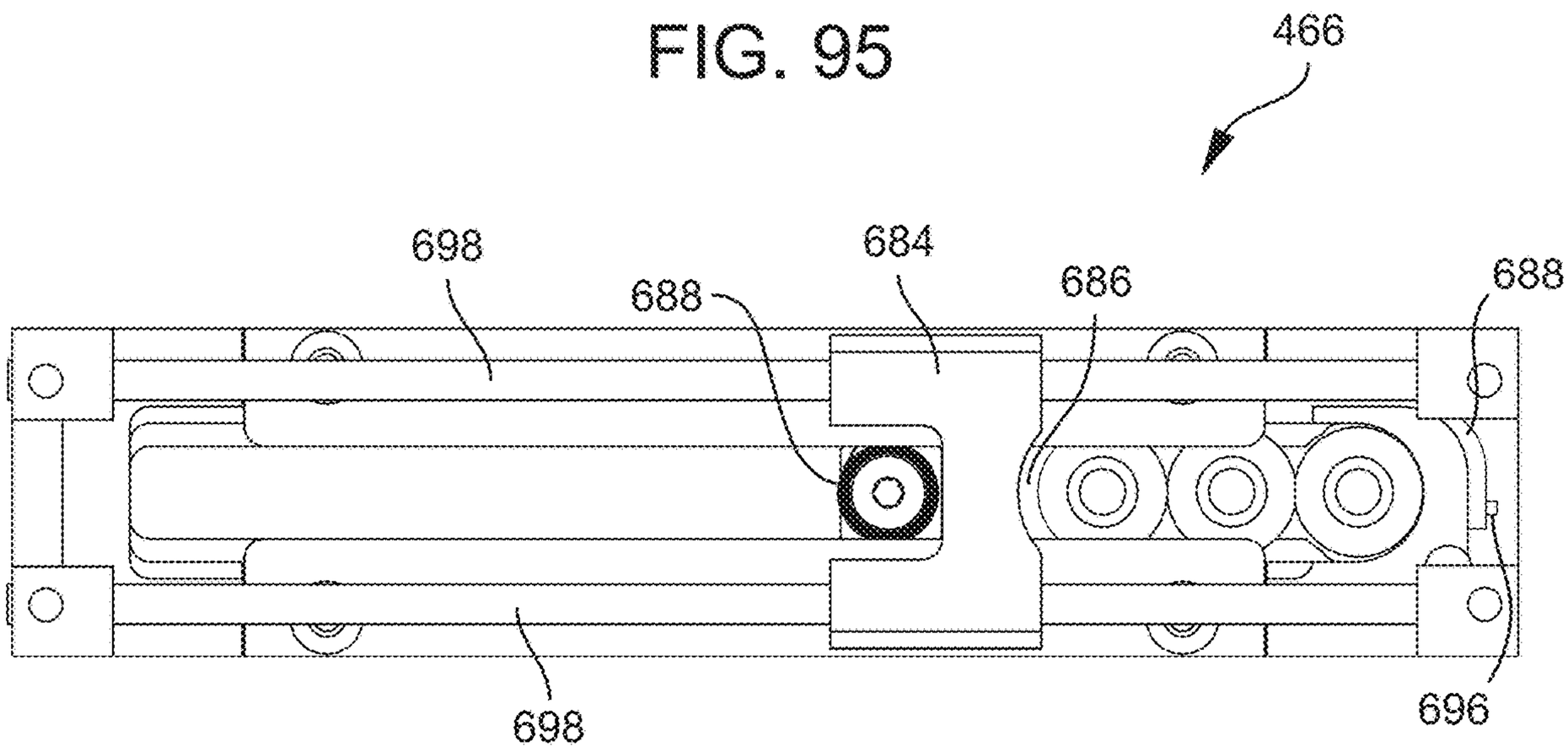
466
698
688
684
686
688
698
696

FIG. 96

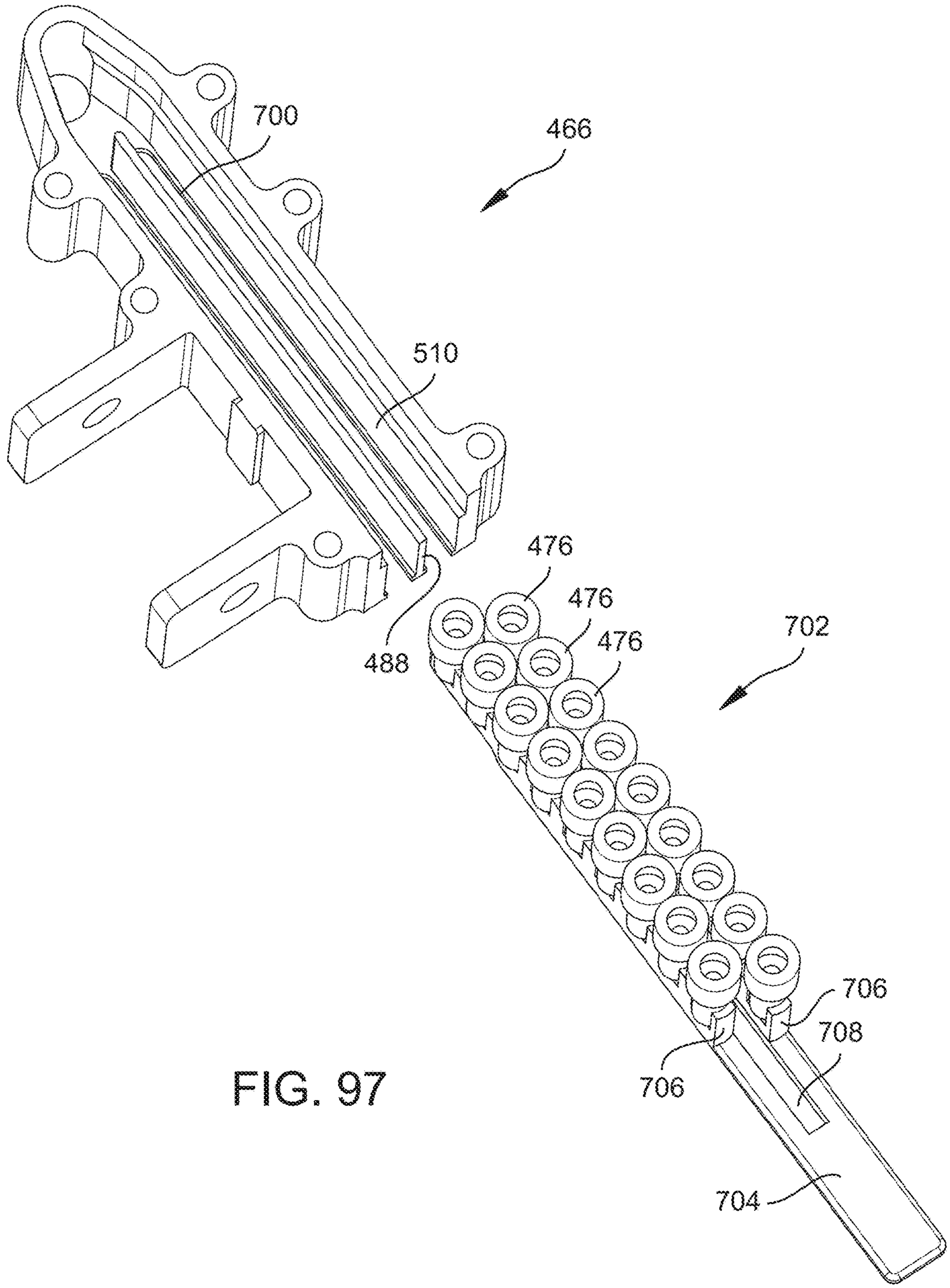

FIG. 97

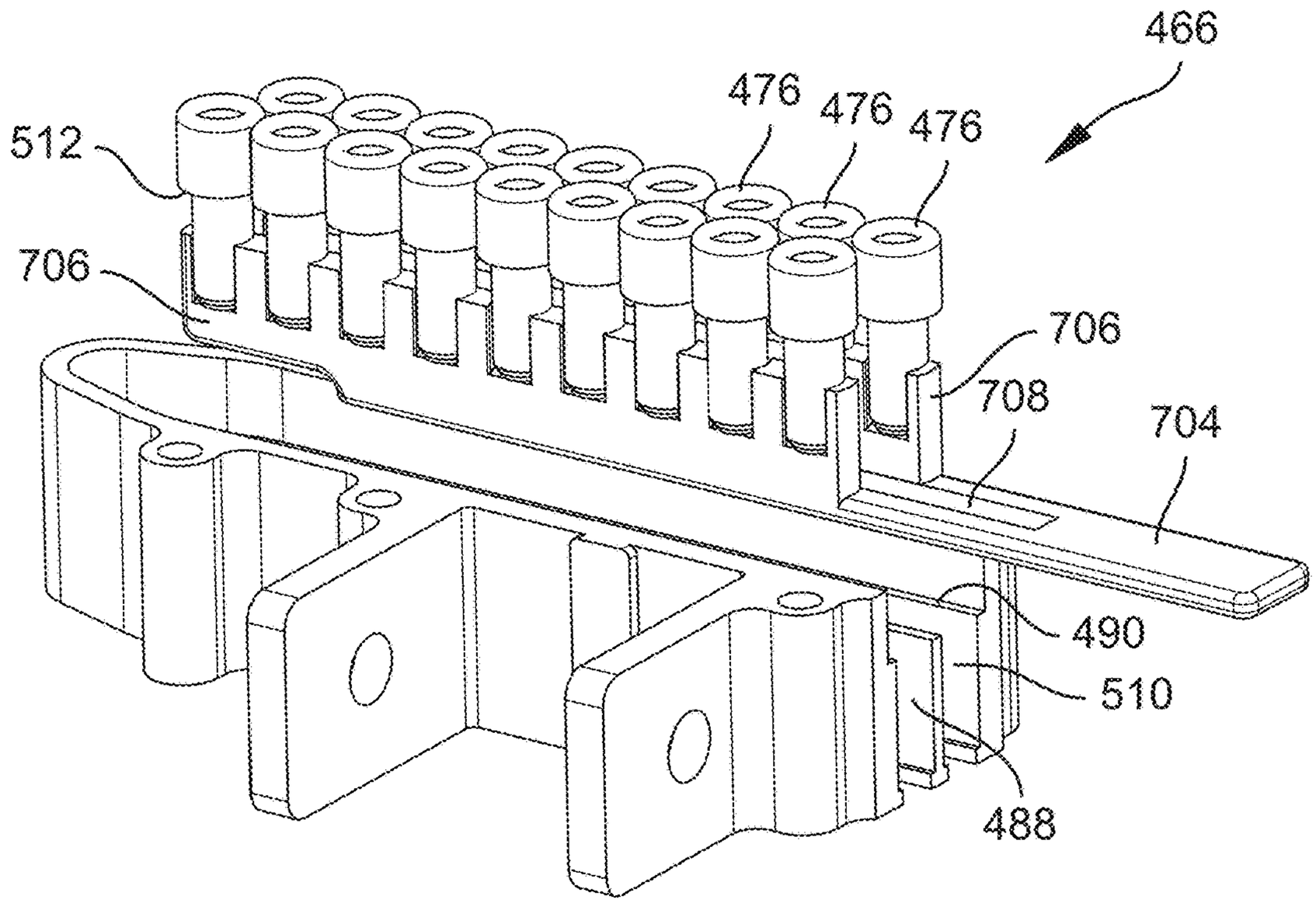
466
476
476
476
512
706
706
708
704
490
510
488

FIG. 98

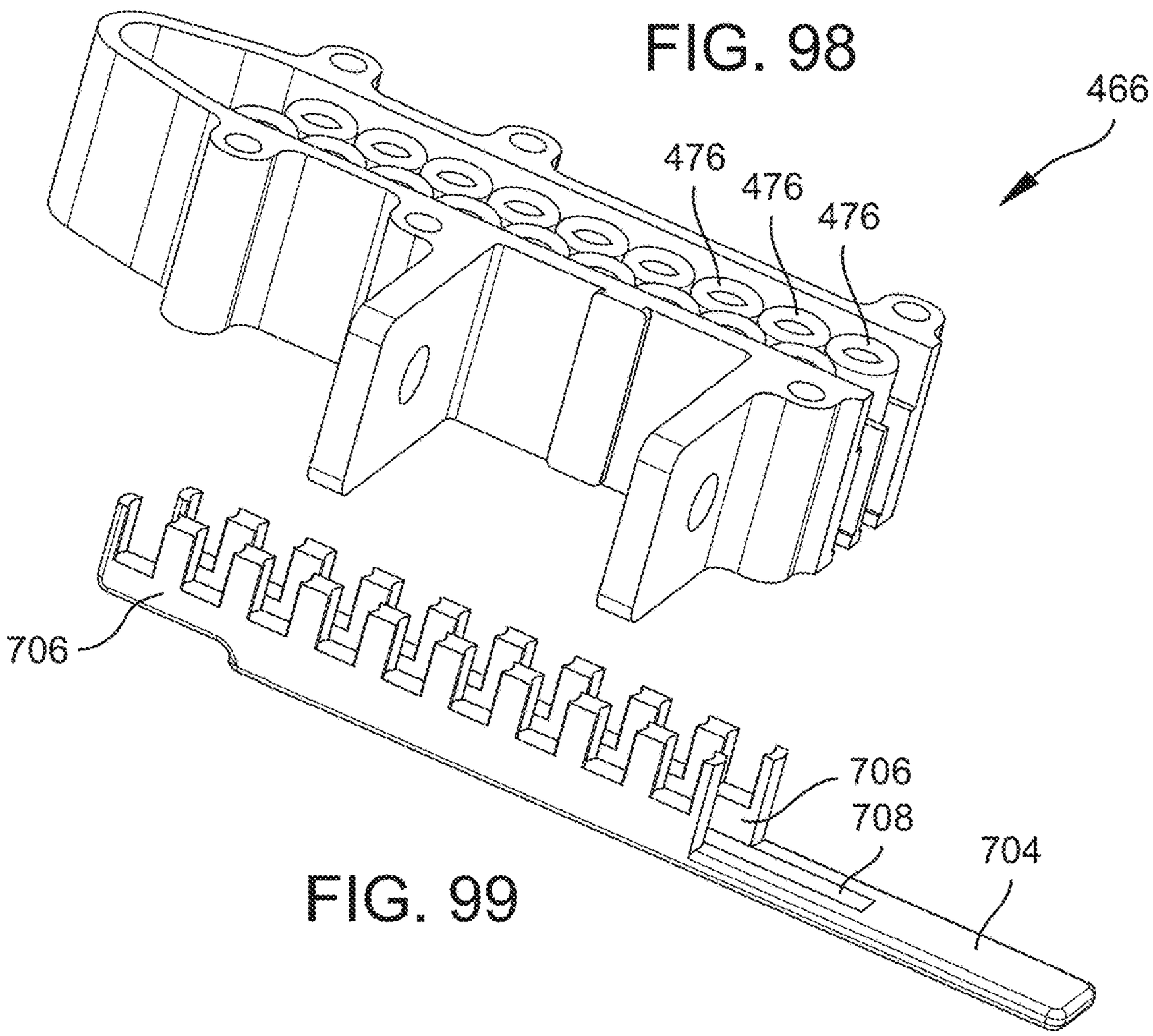
466
476
476
476
706
706
708
704

FIG. 99

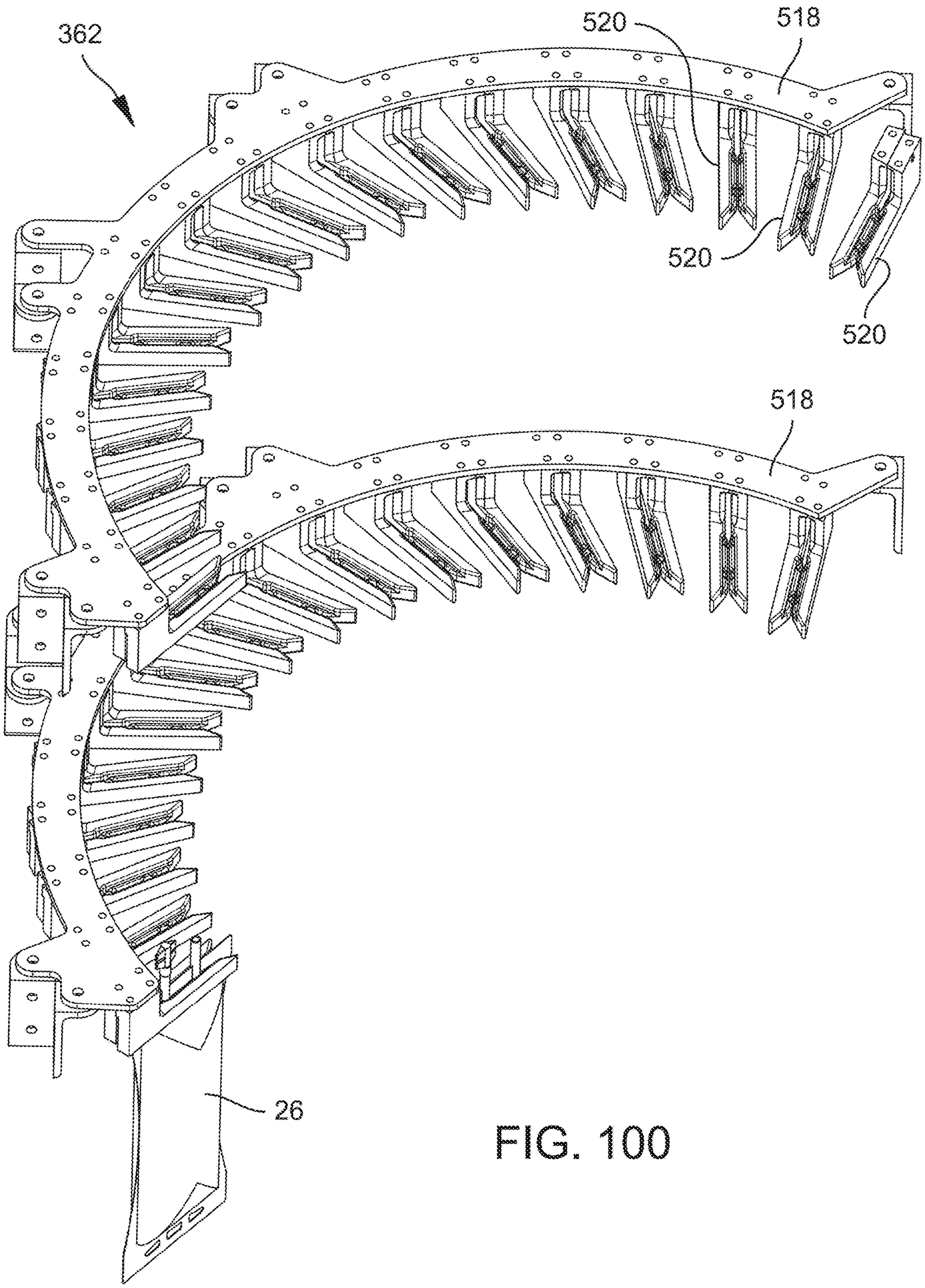

FIG. 100

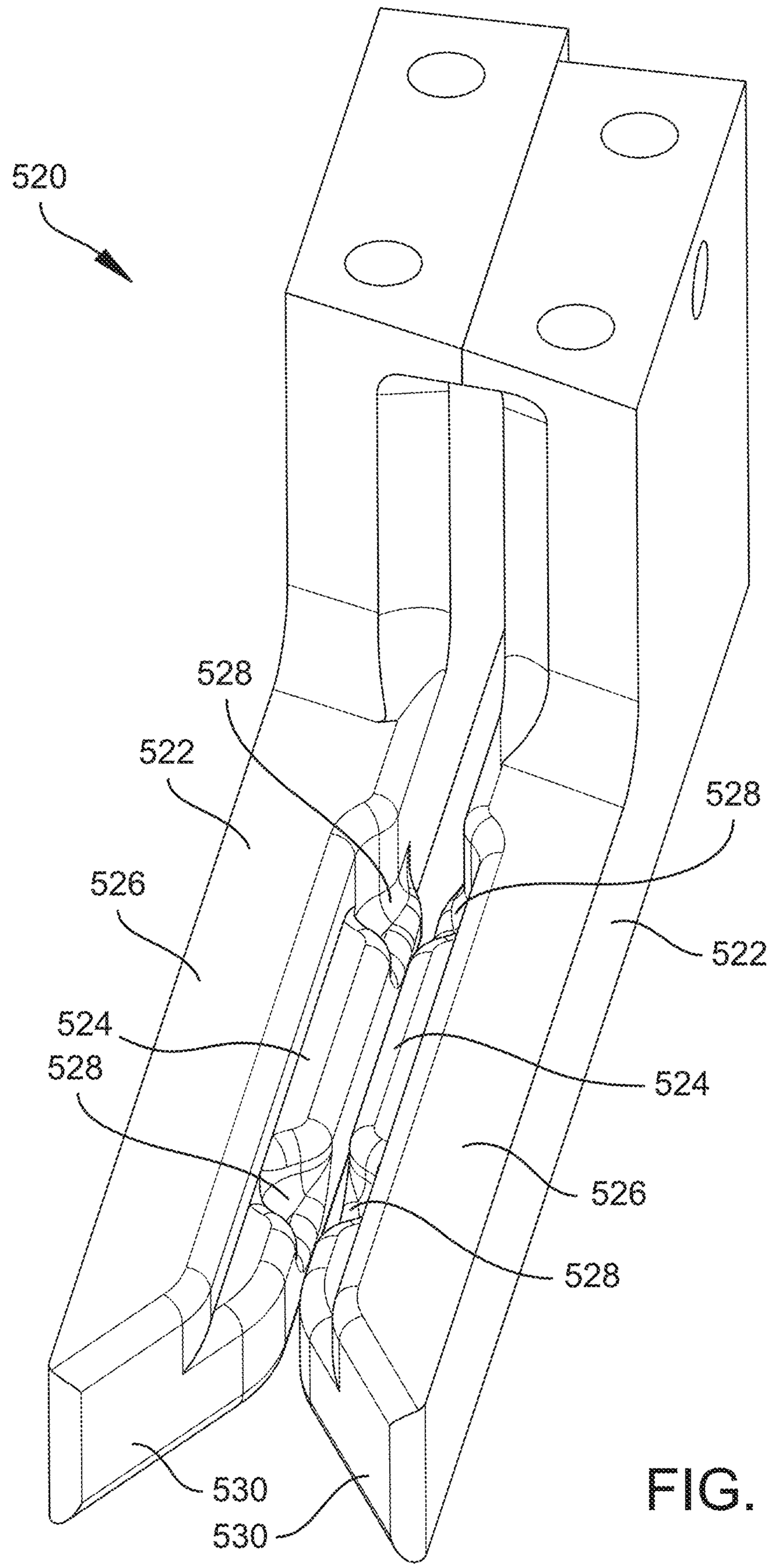

FIG. 101

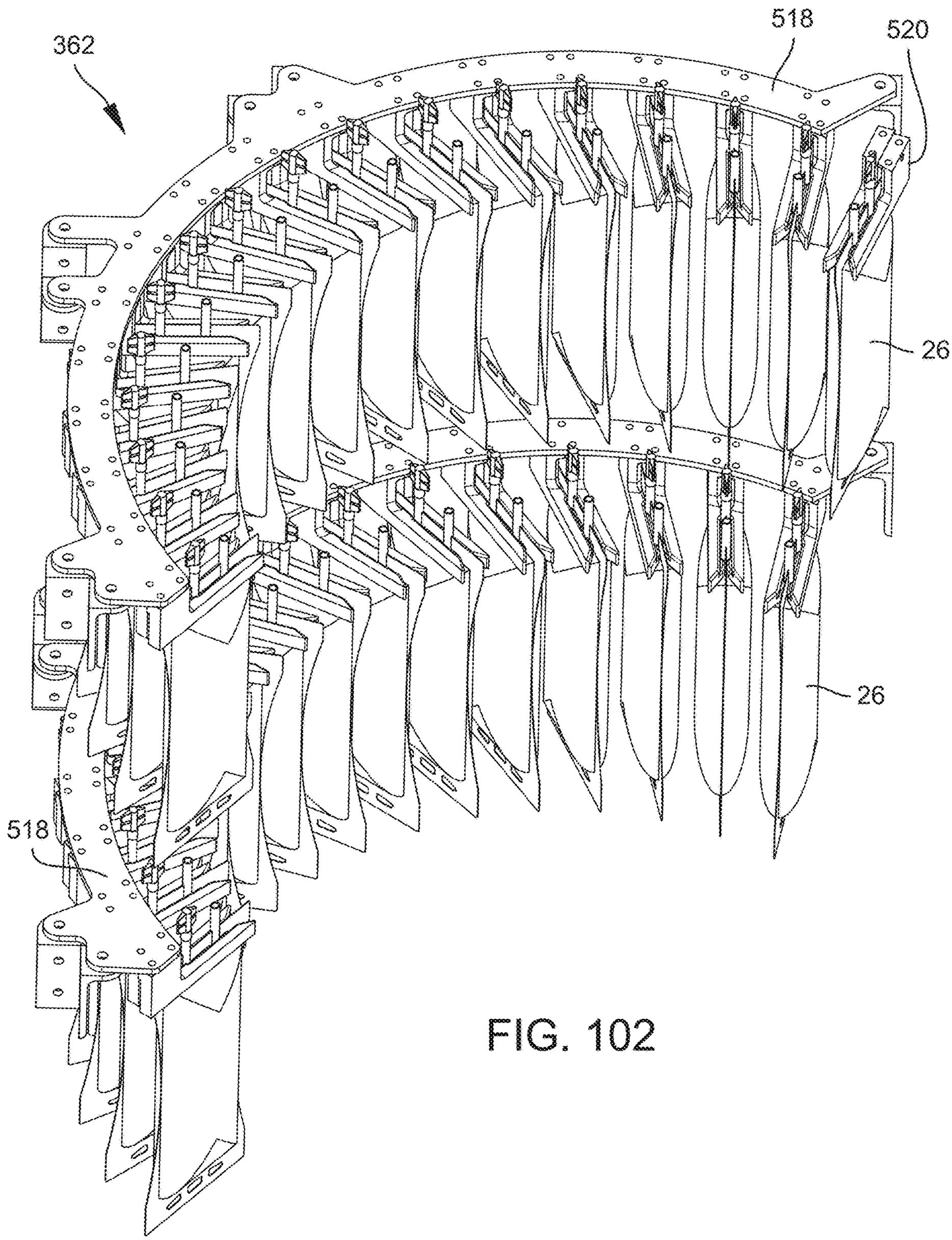

FIG. 102

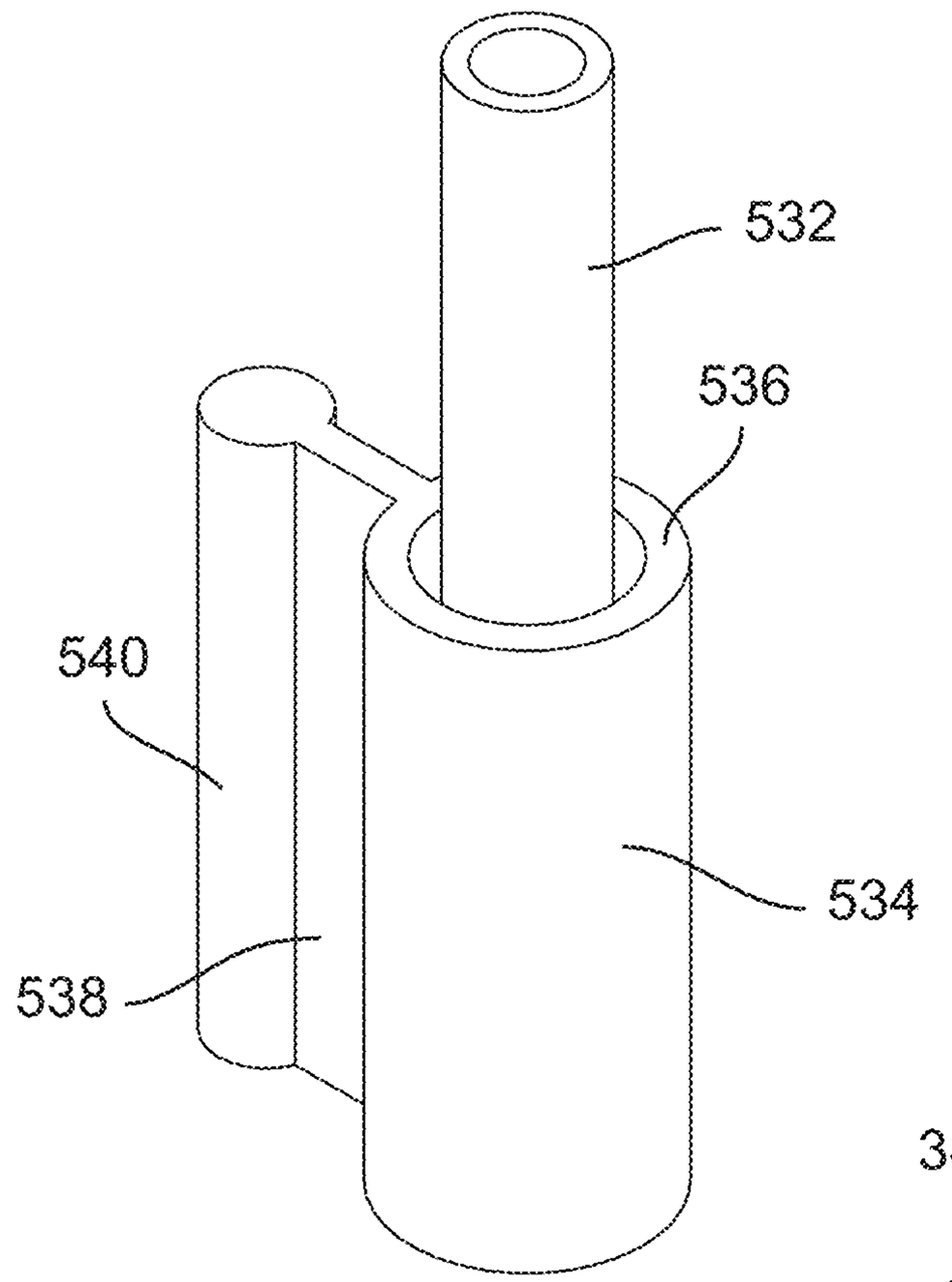

FIG. 103

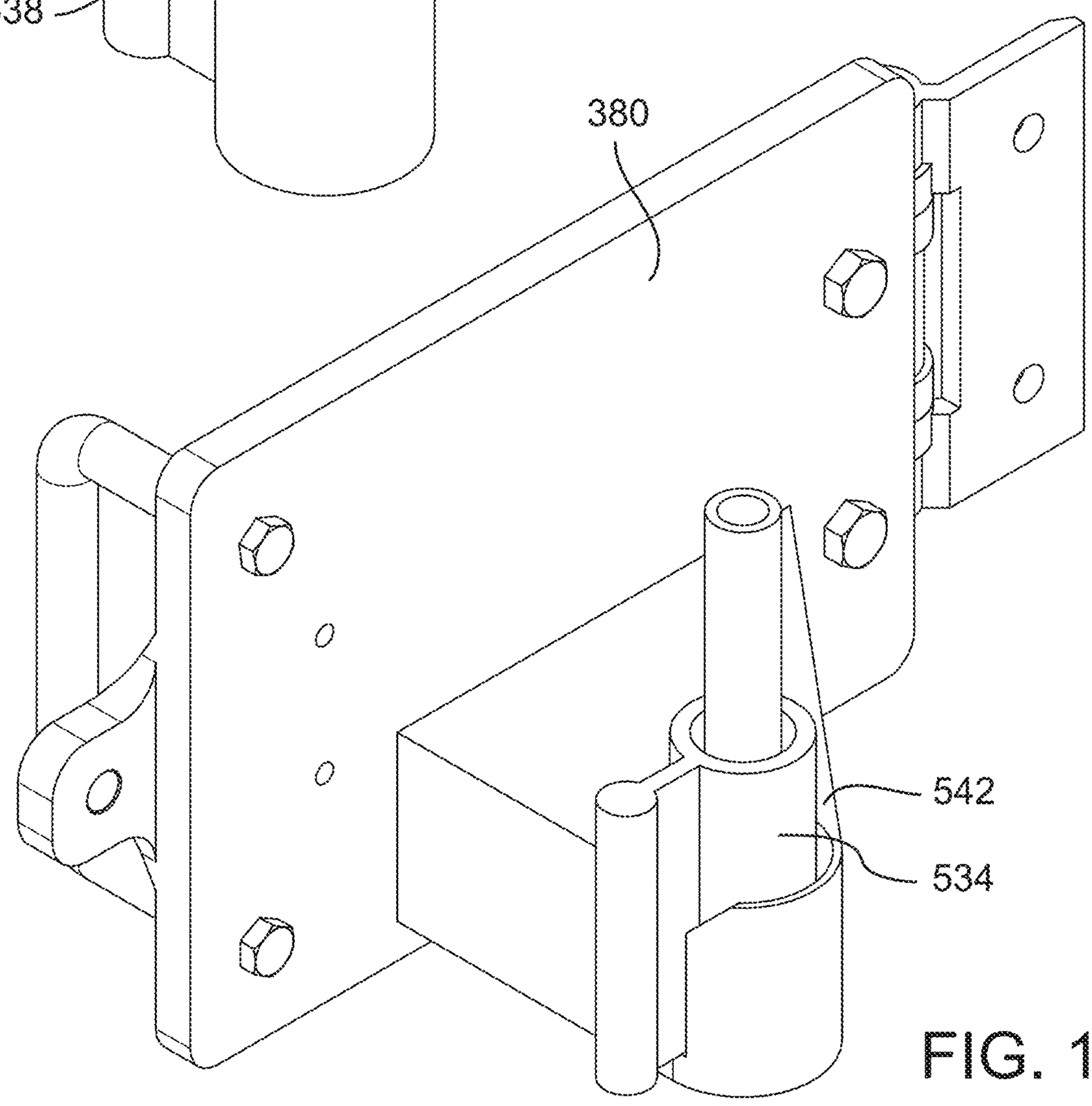

FIG. 104

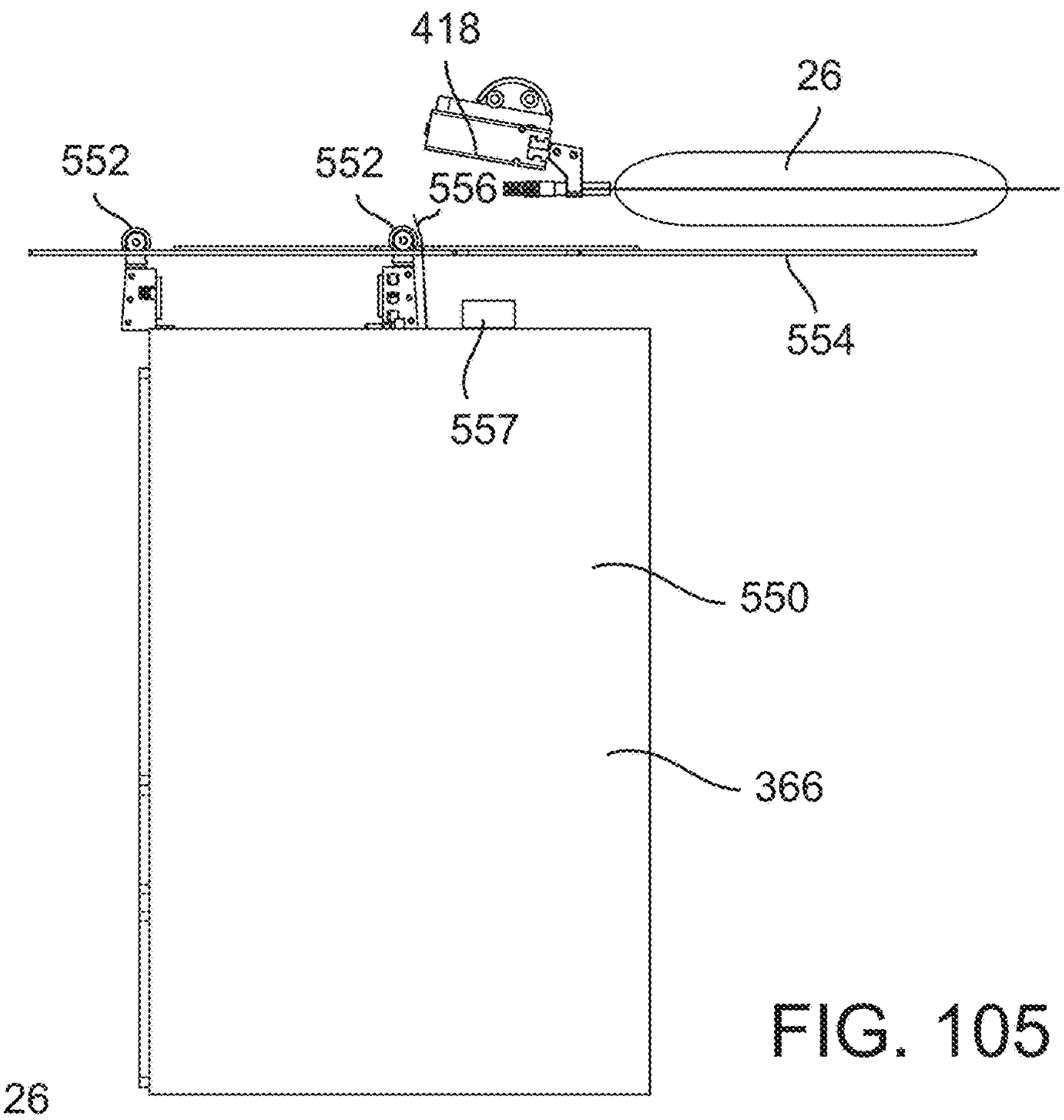

FIG. 105

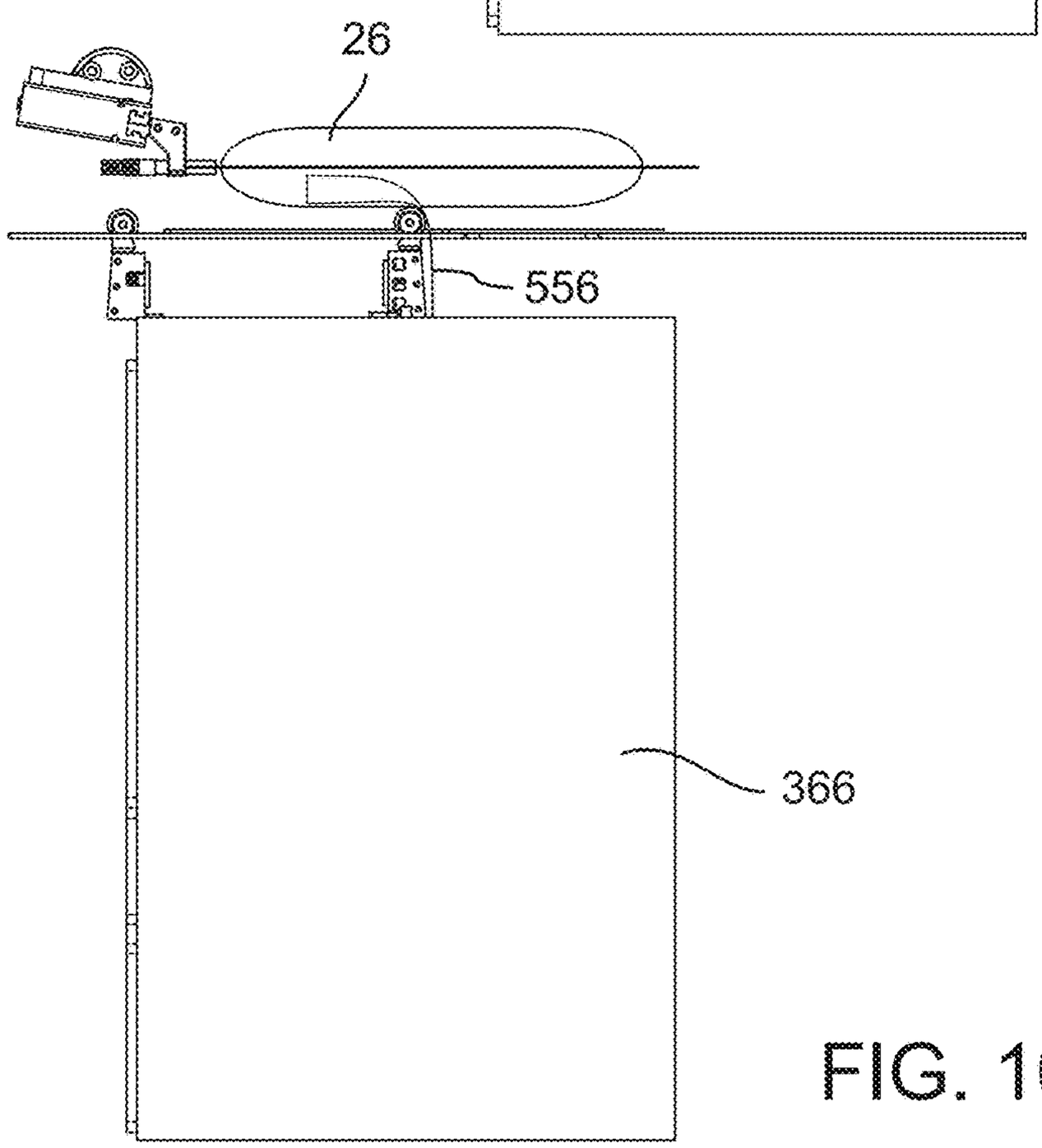

FIG. 106

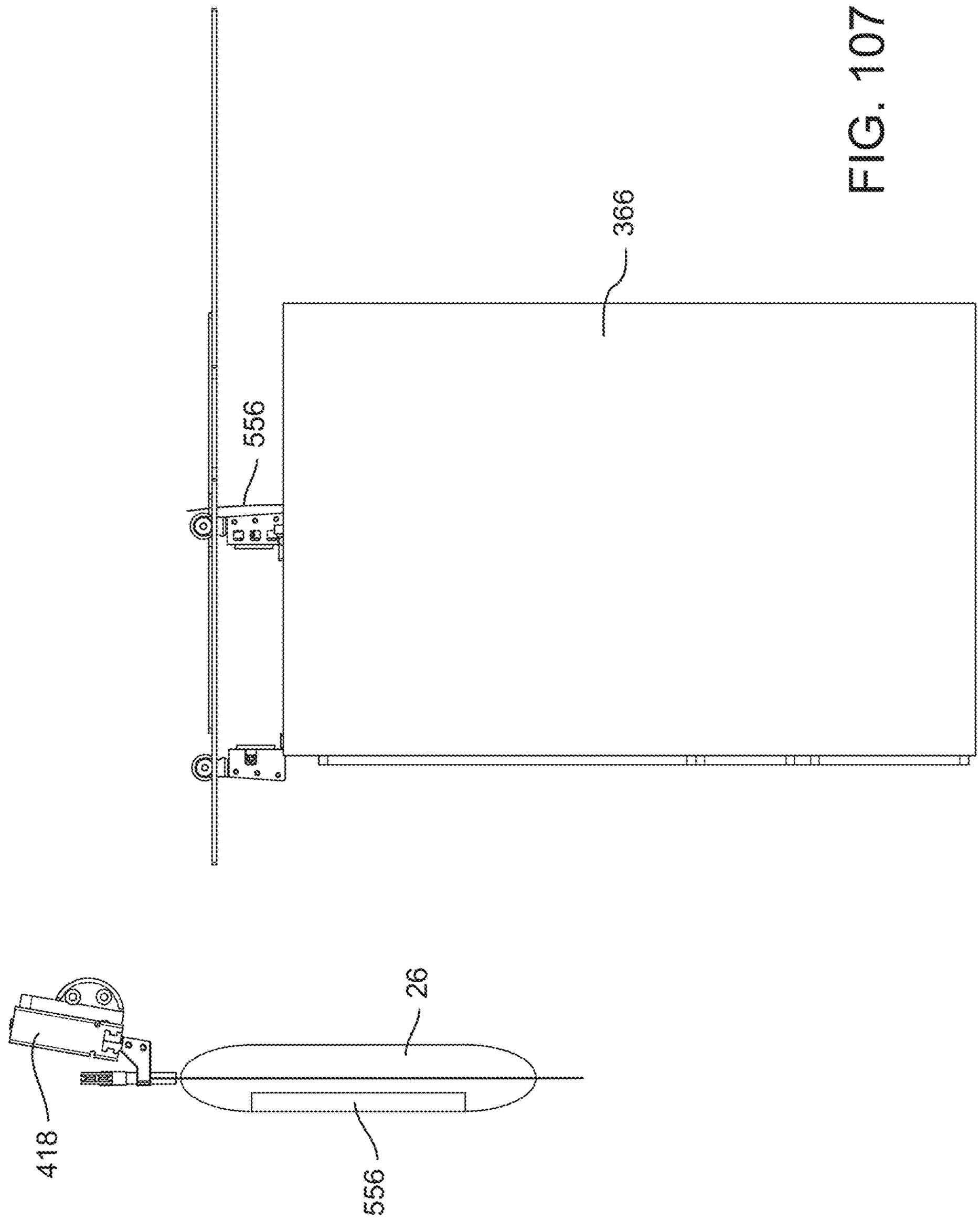

FIG. 107

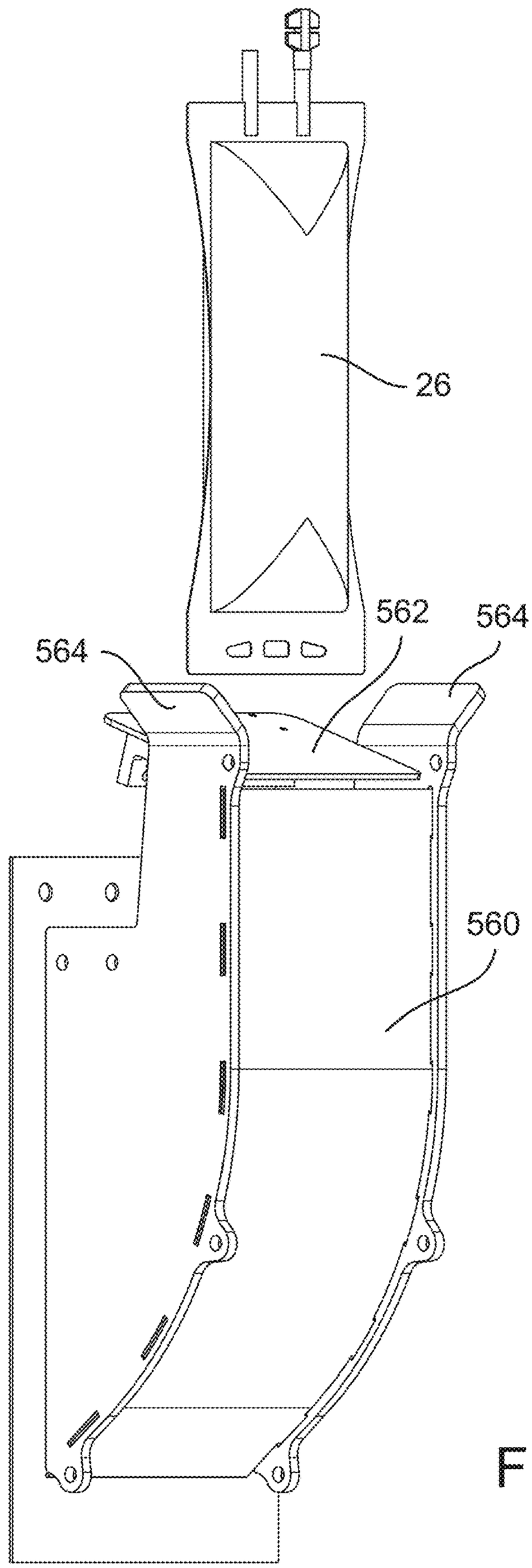

FIG. 108

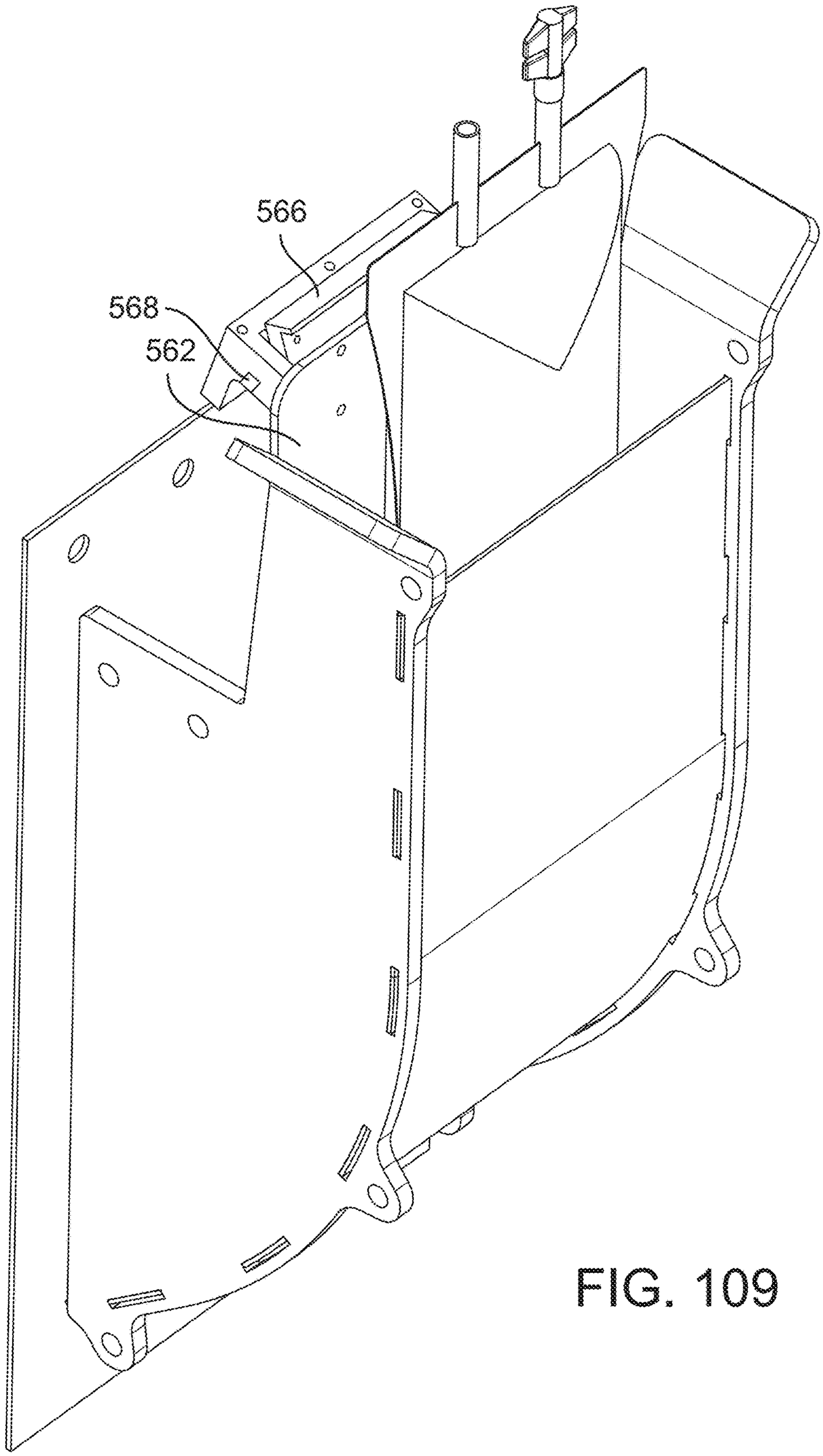

FIG. 109

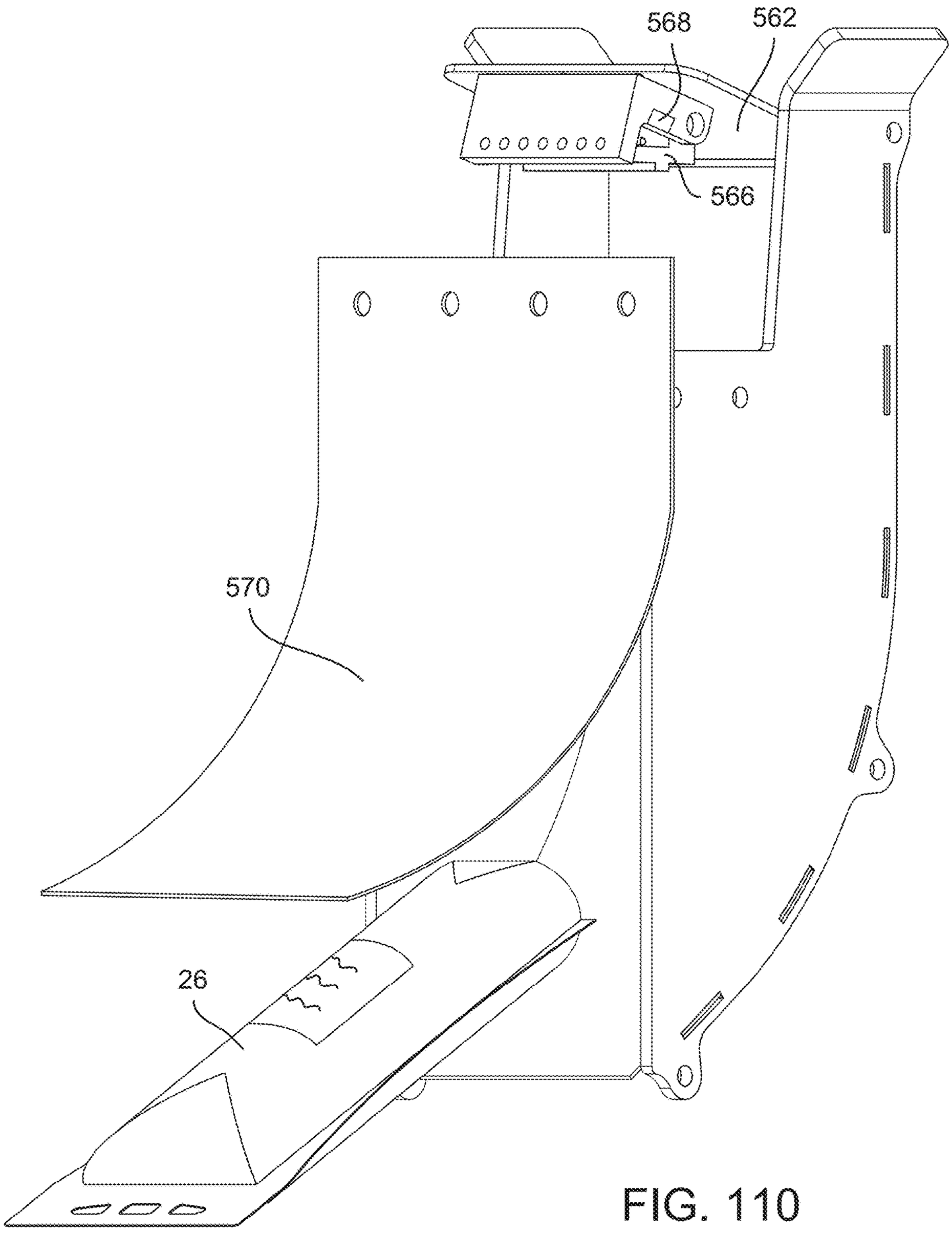

FIG. 110

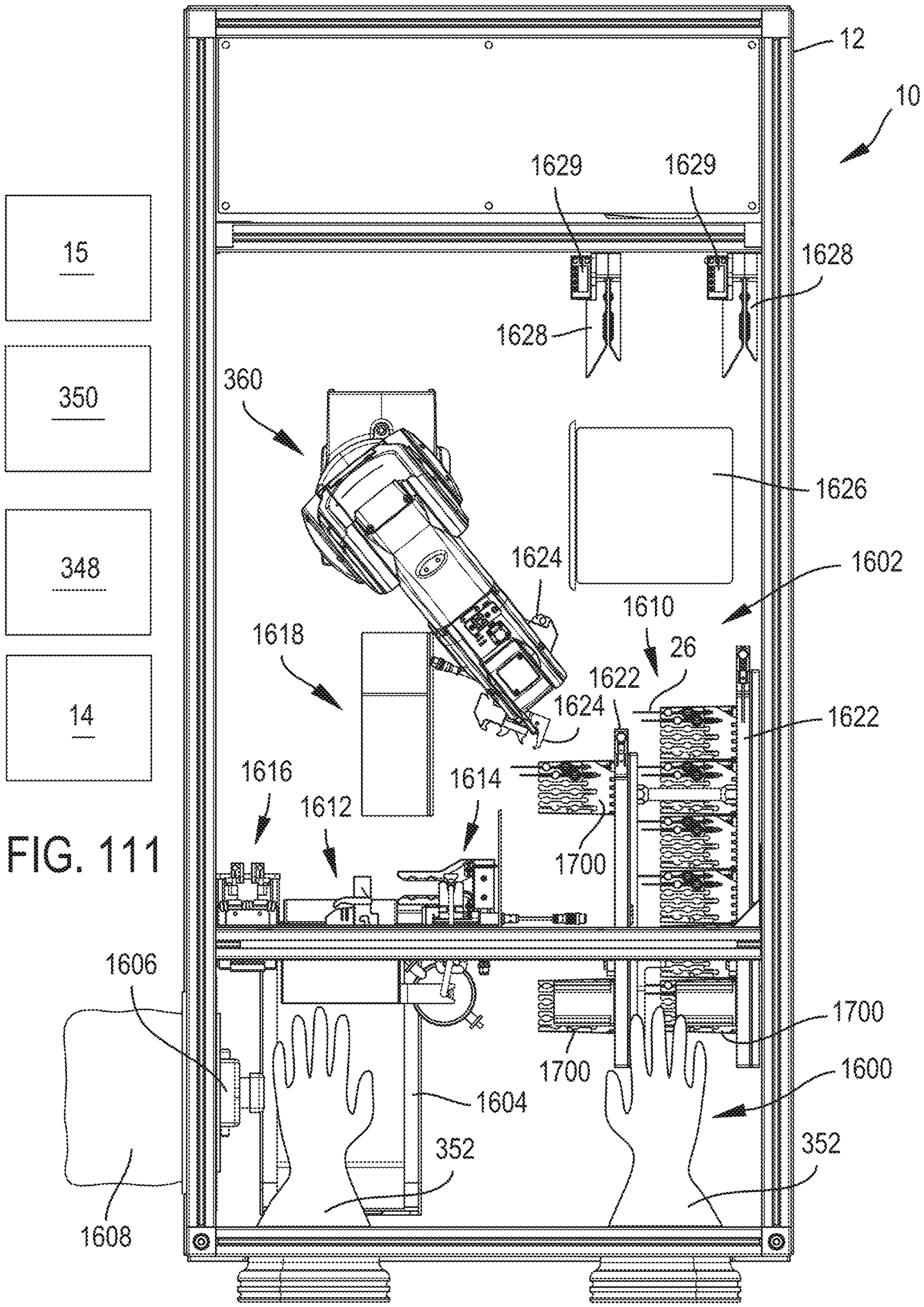
12
10
1629
1629
1628
1628
15
350
348
14
360
1626
1624
1602
1610
26
1618
1622
1624
1622
1616
1614
1612
1700
1606
1700
1700
1600
1604
352
352
1608

FIG. 111

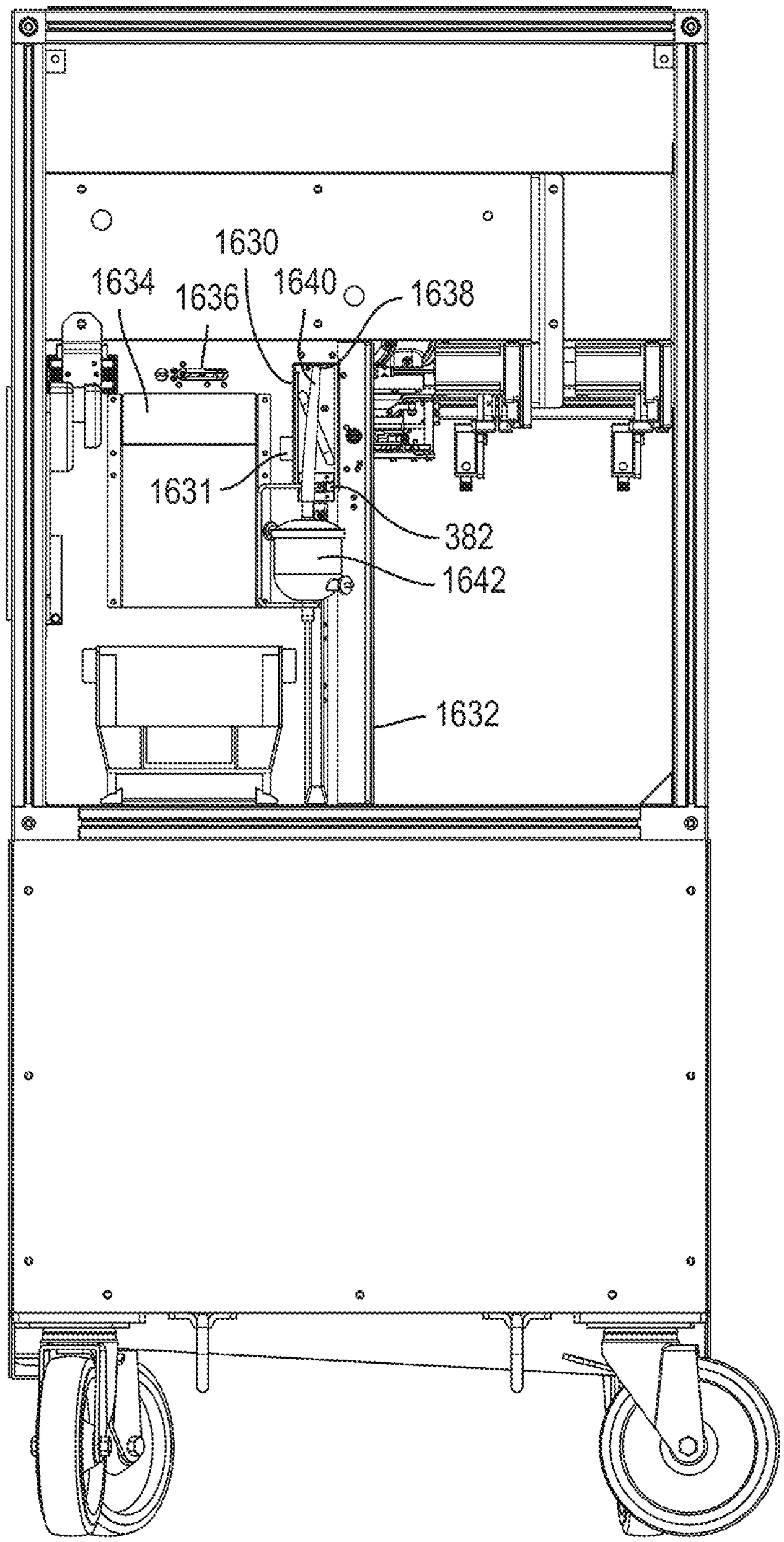

FIG. 112

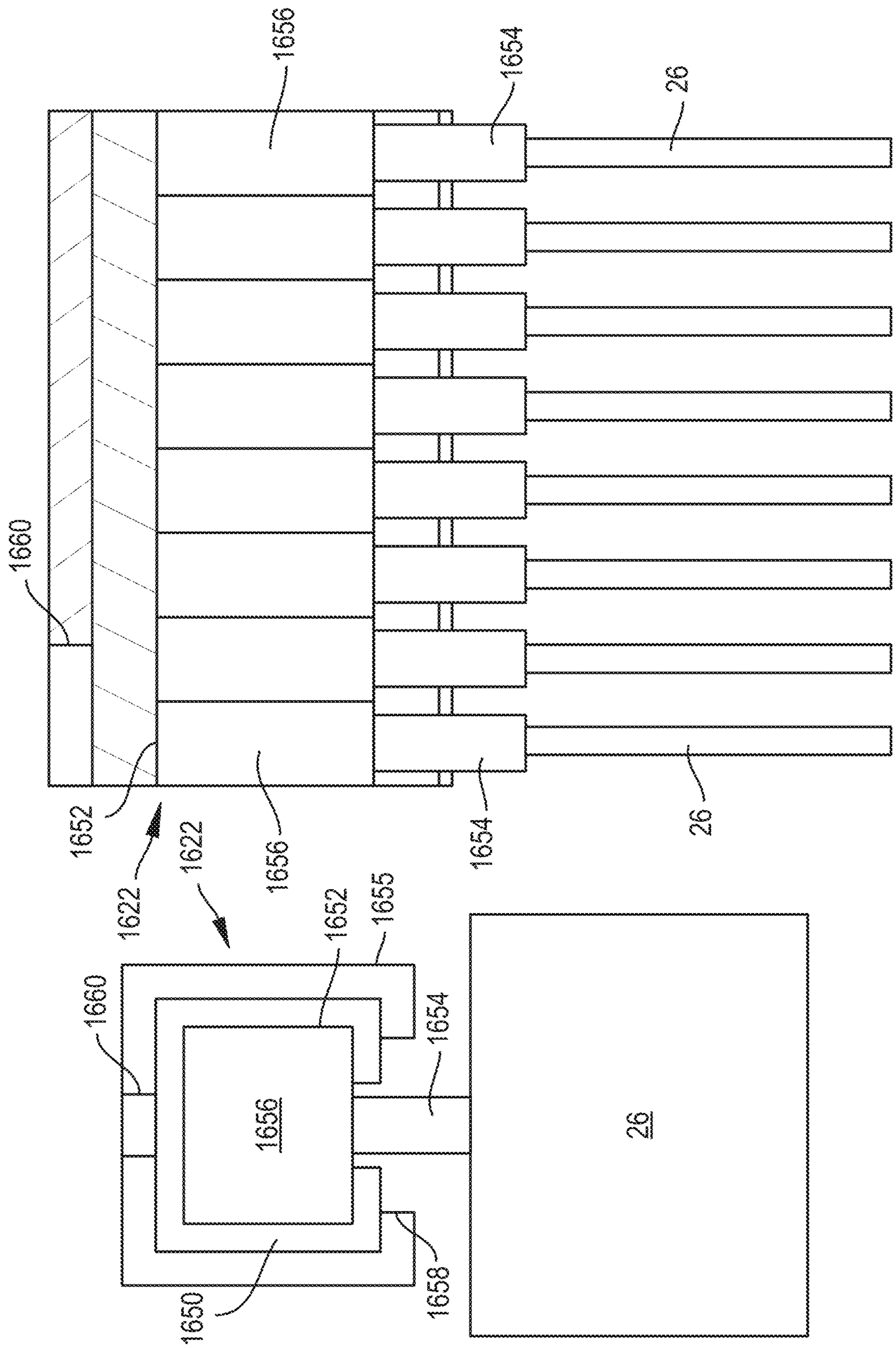

FIG. 114

FIG. 113

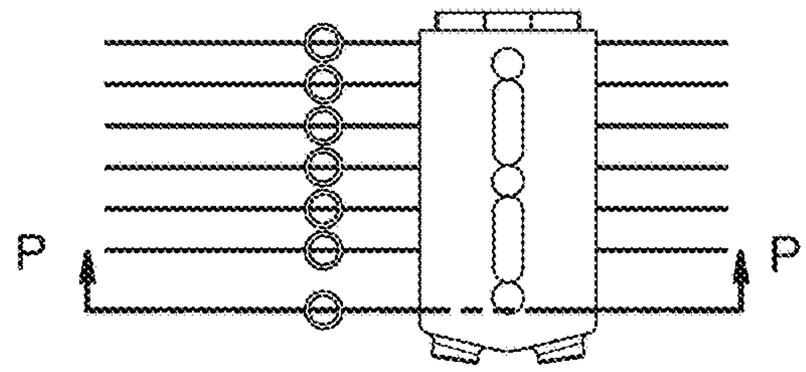

FIG. 115

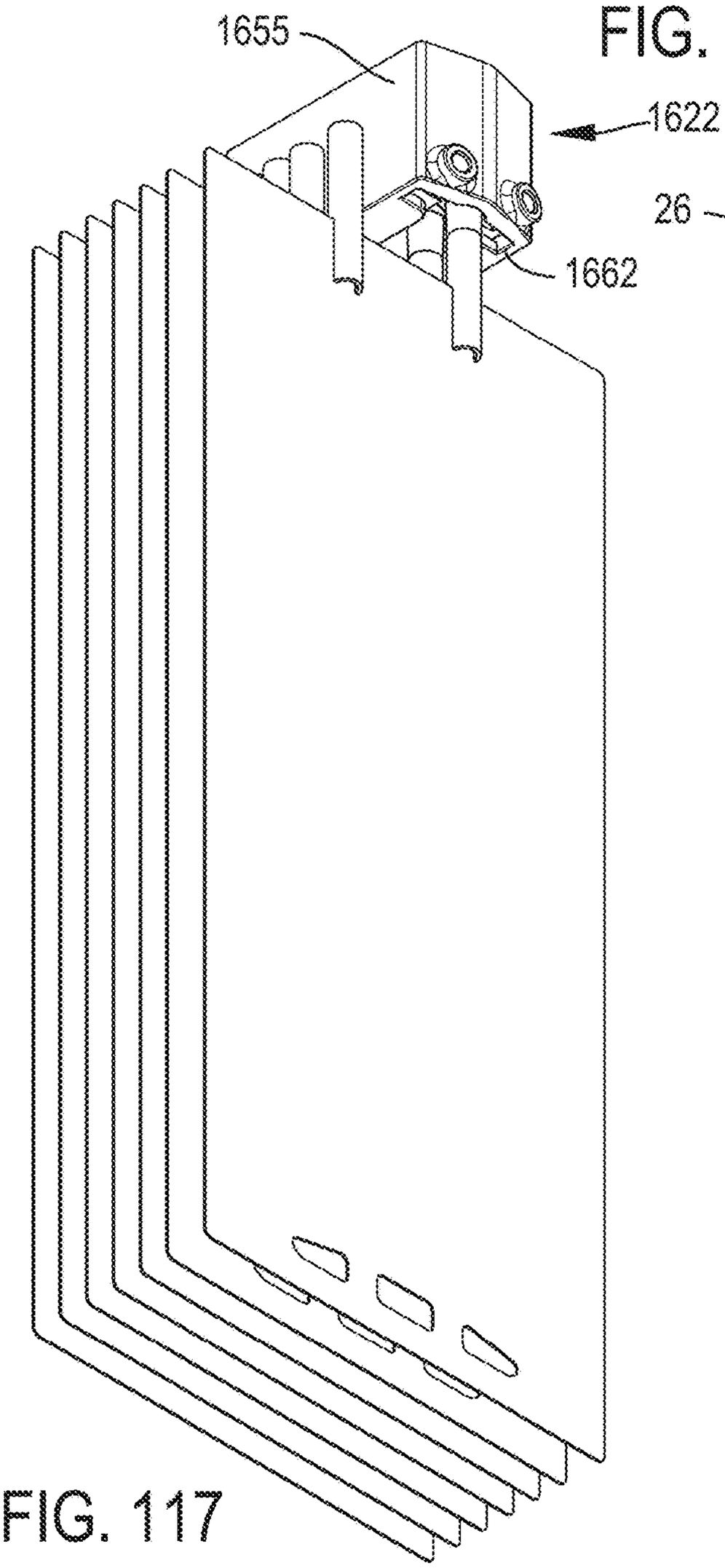

FIG. 117

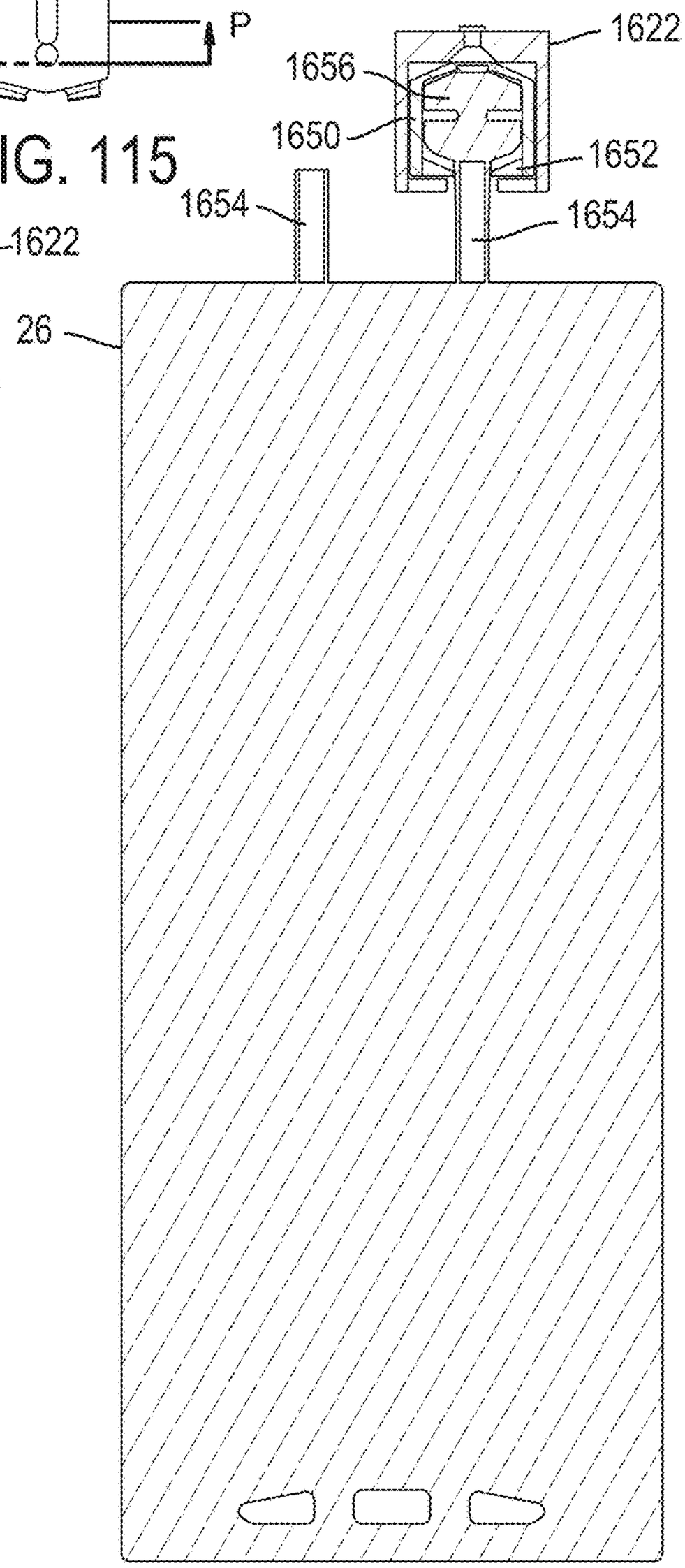

FIG. 116

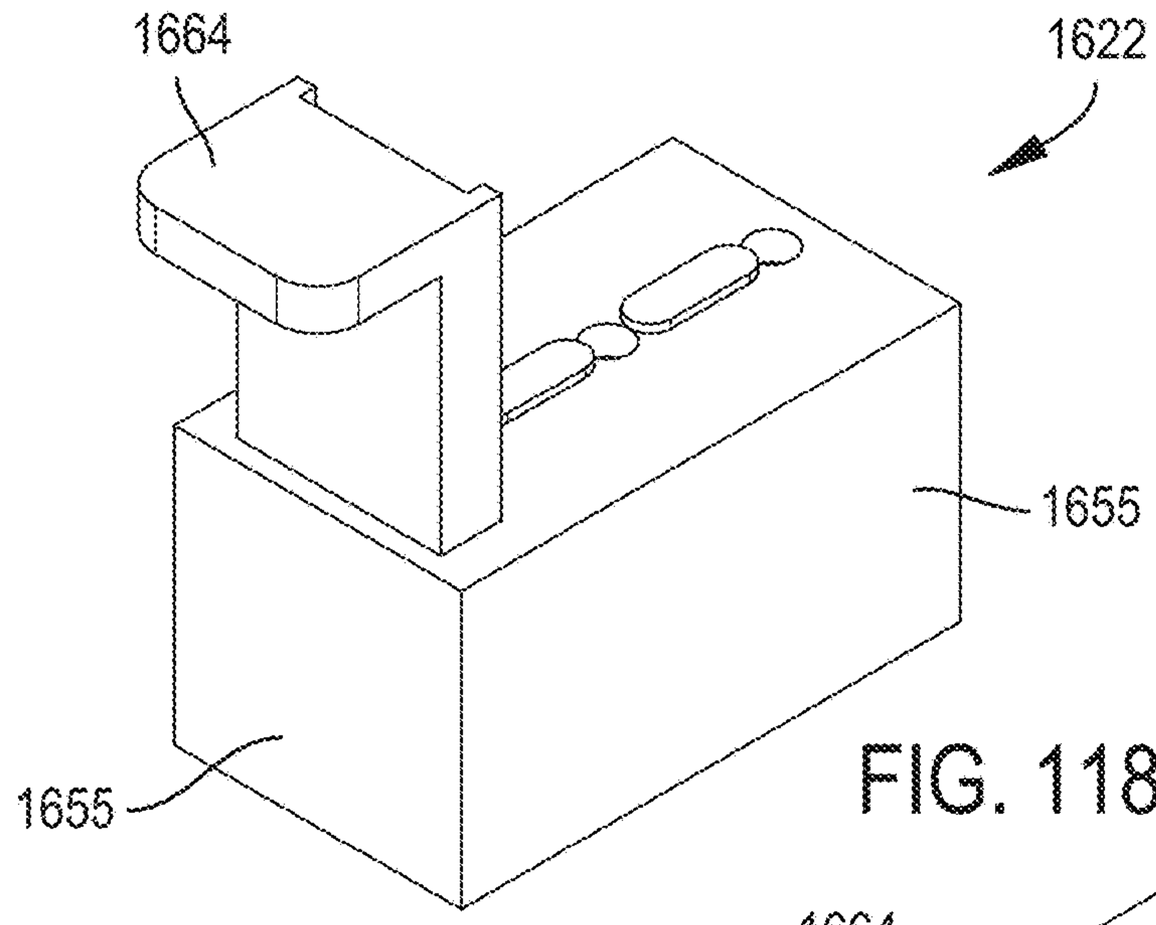

FIG. 118

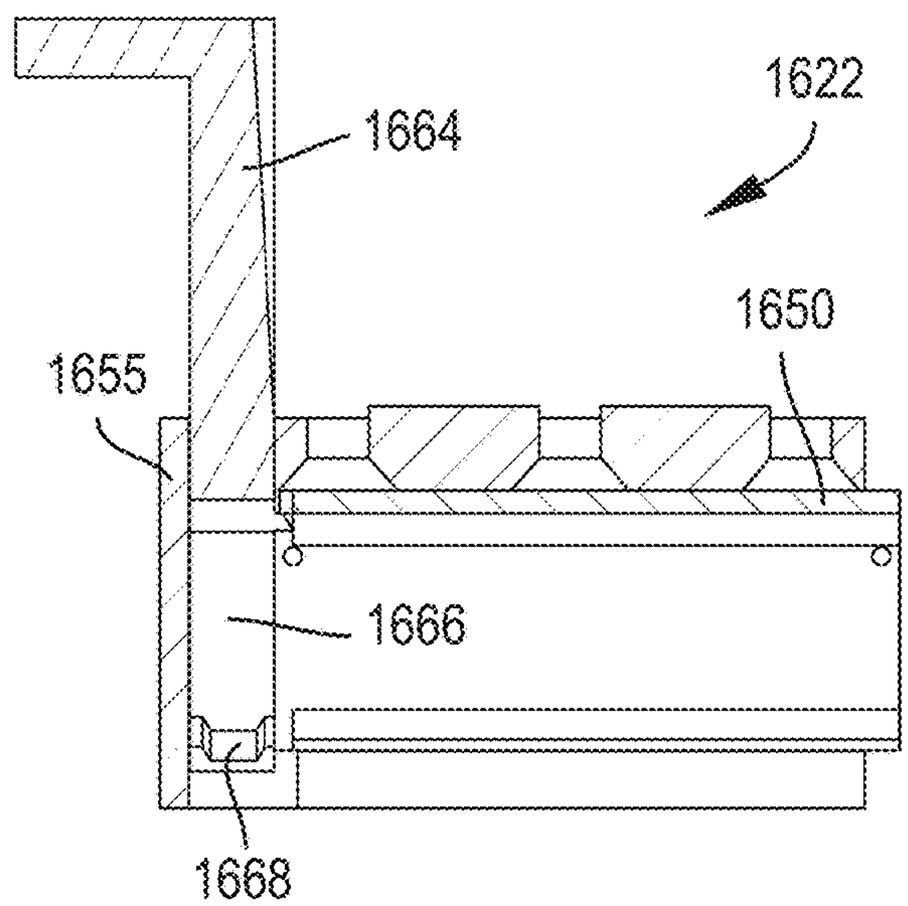

FIG. 120

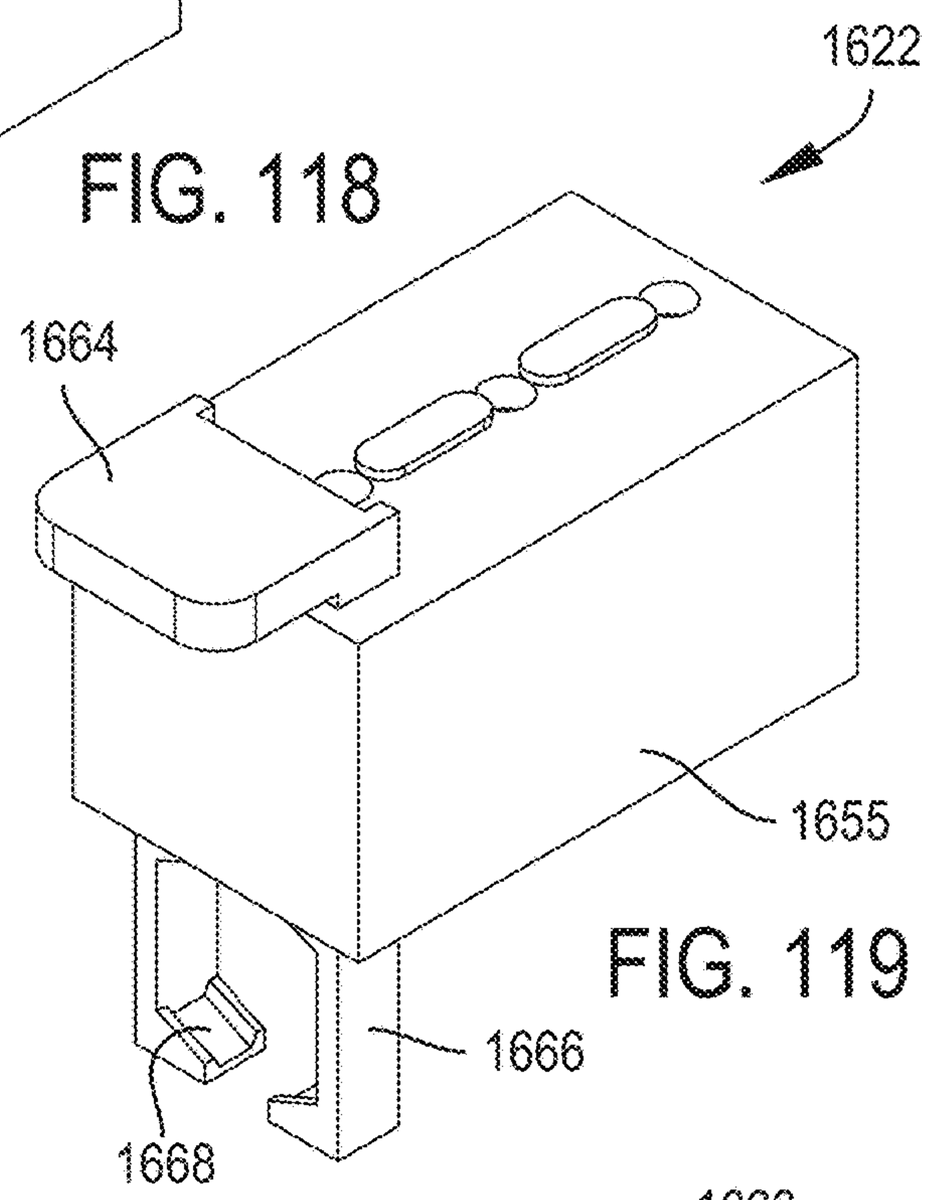

FIG. 119

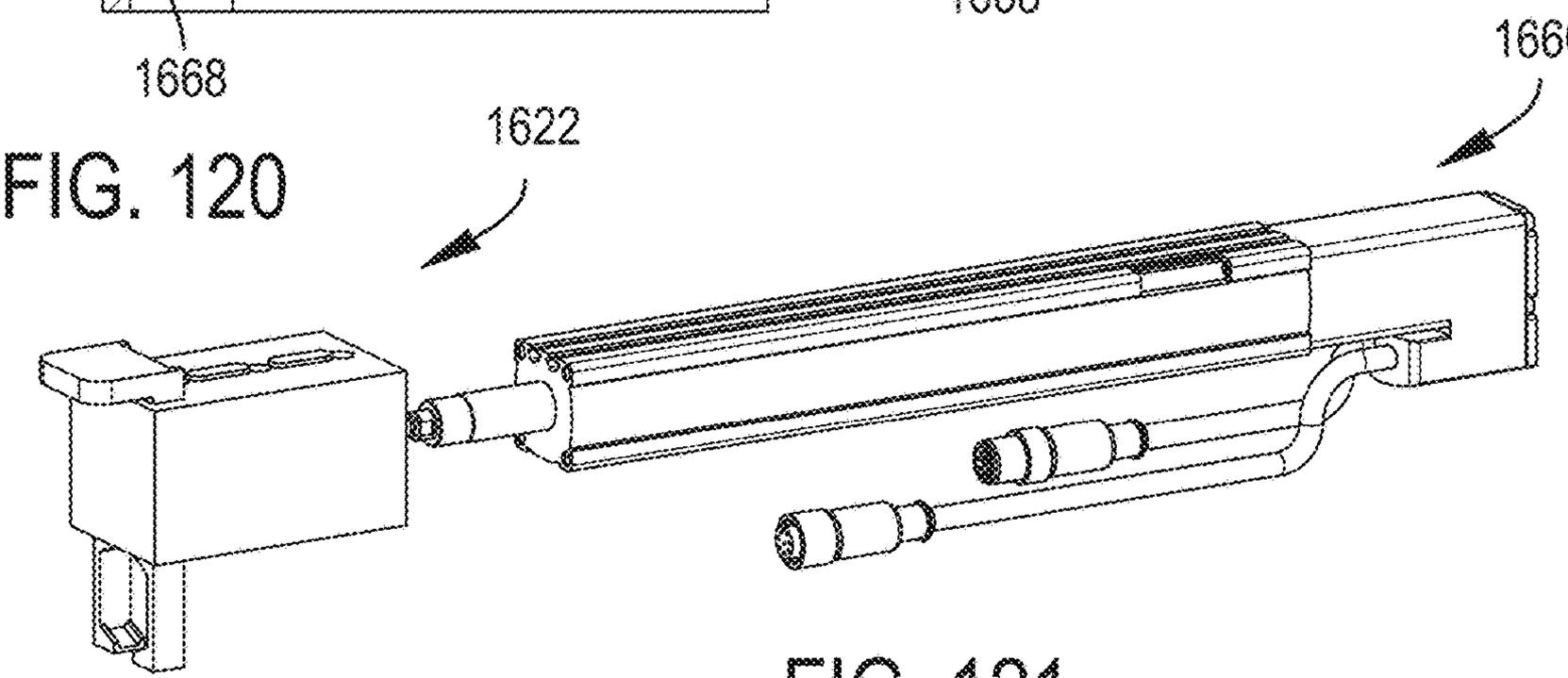

FIG. 121

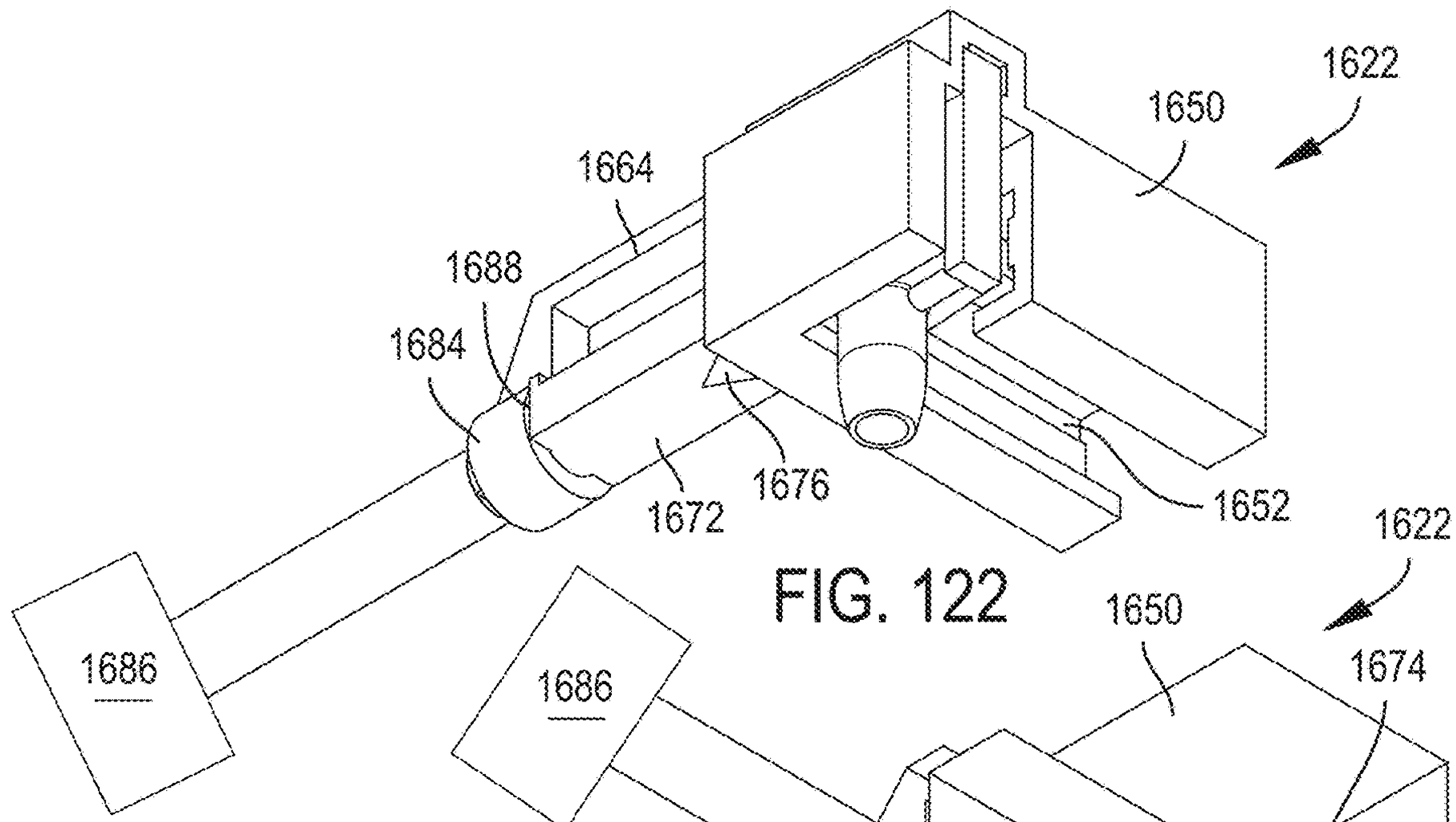

FIG. 122

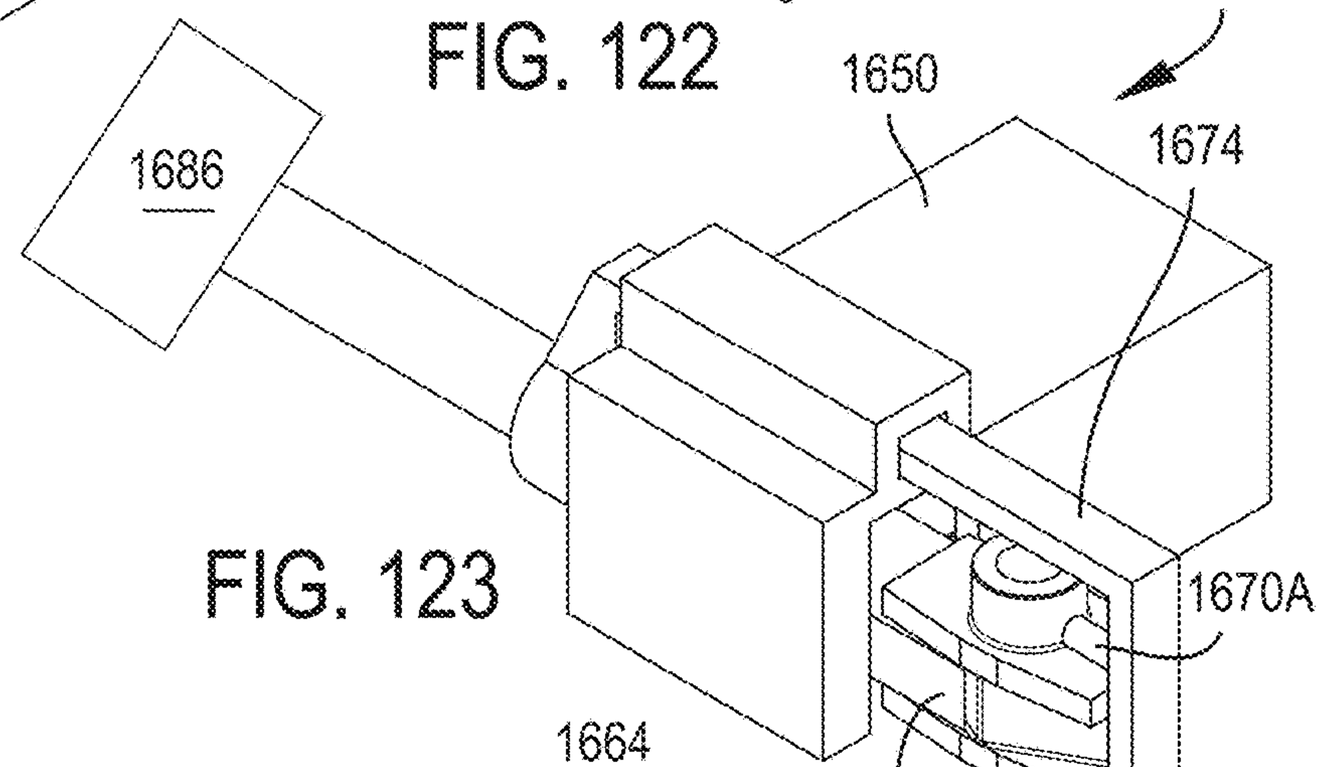

FIG. 123

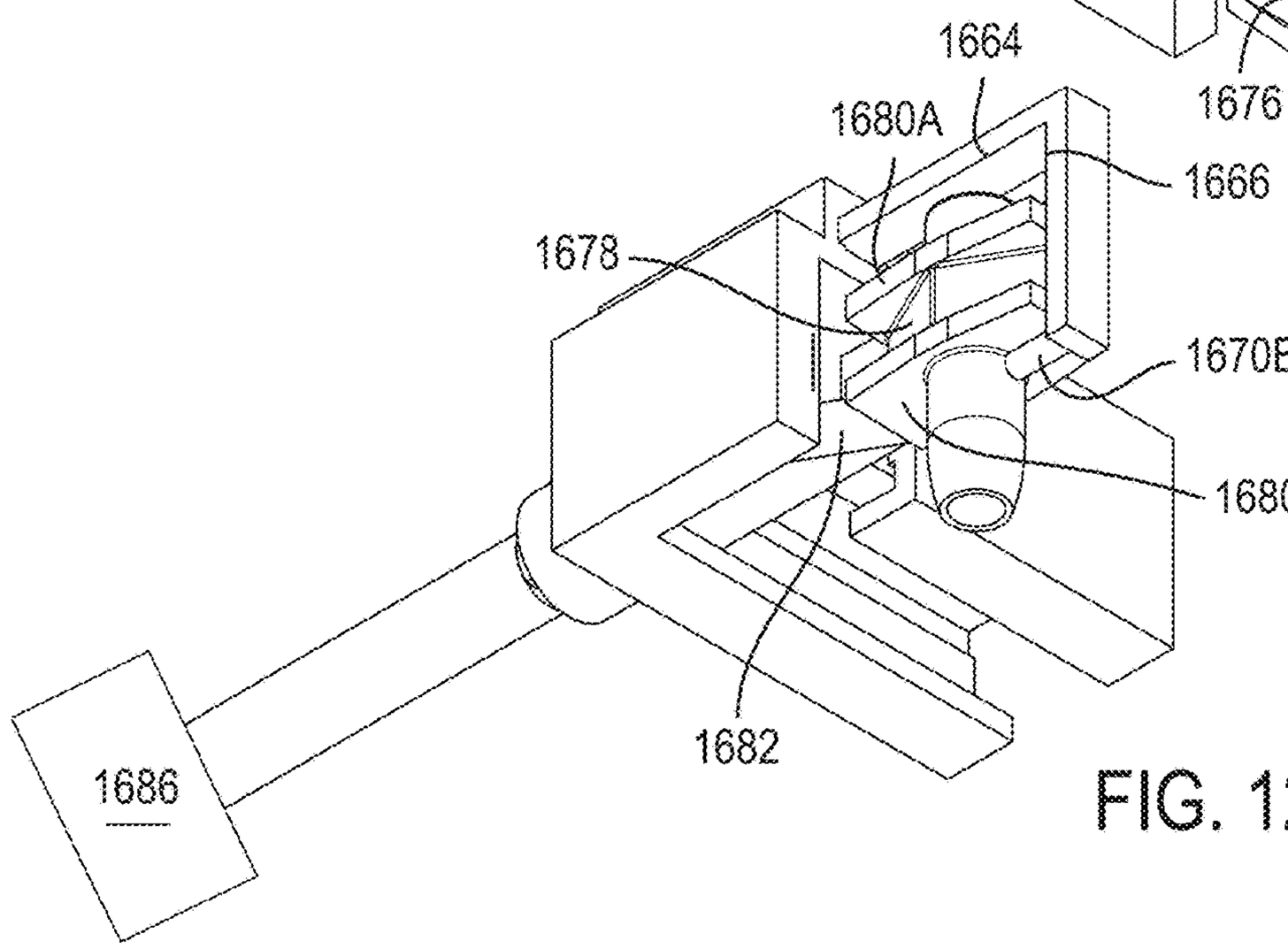

FIG. 124

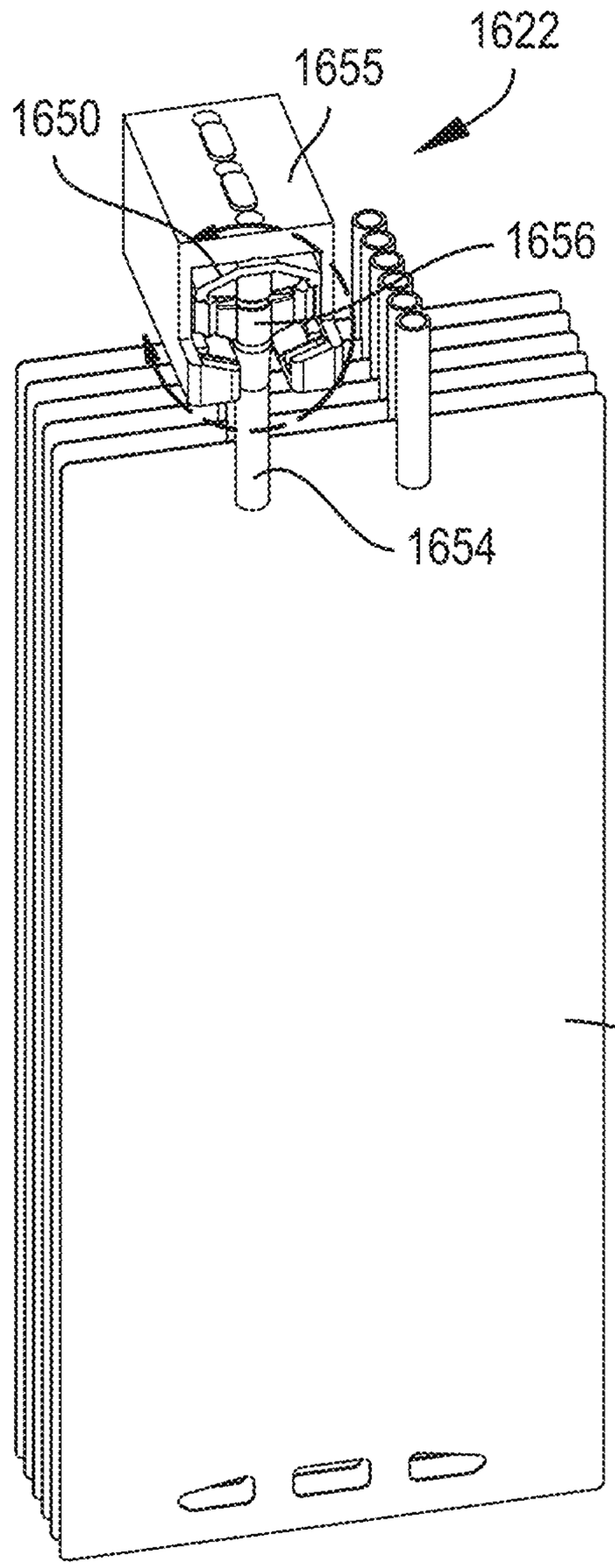

FIG. 125

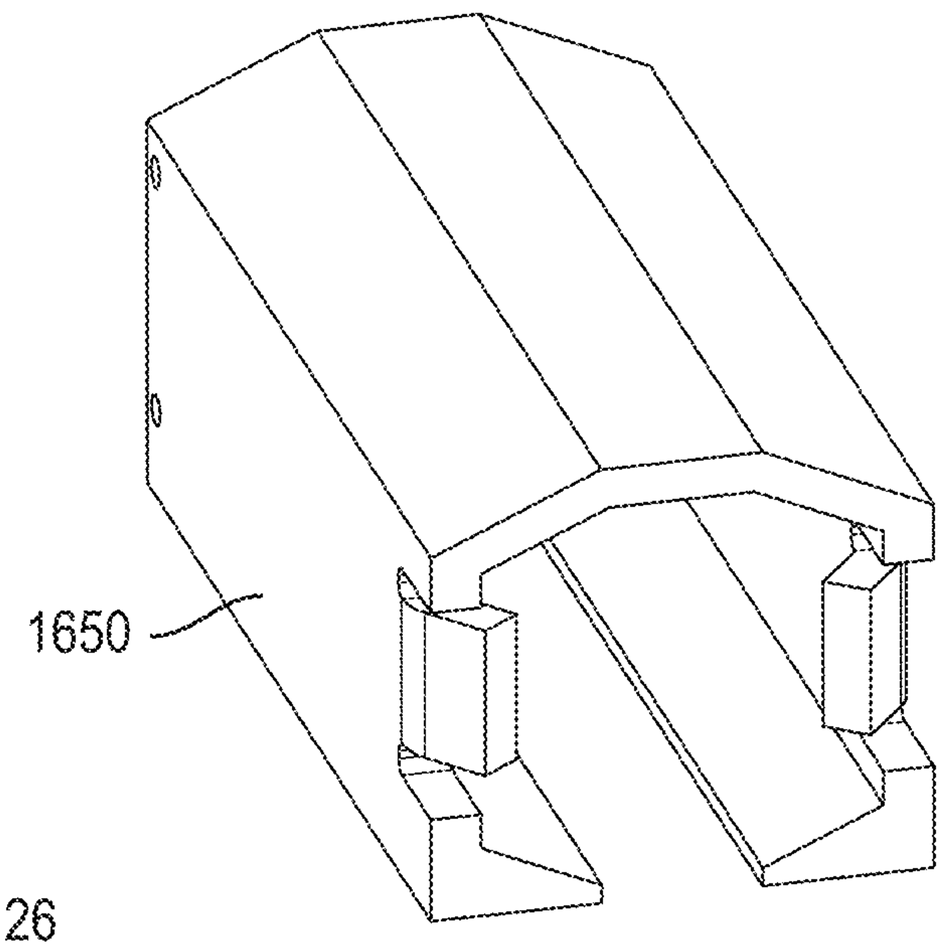

FIG. 126

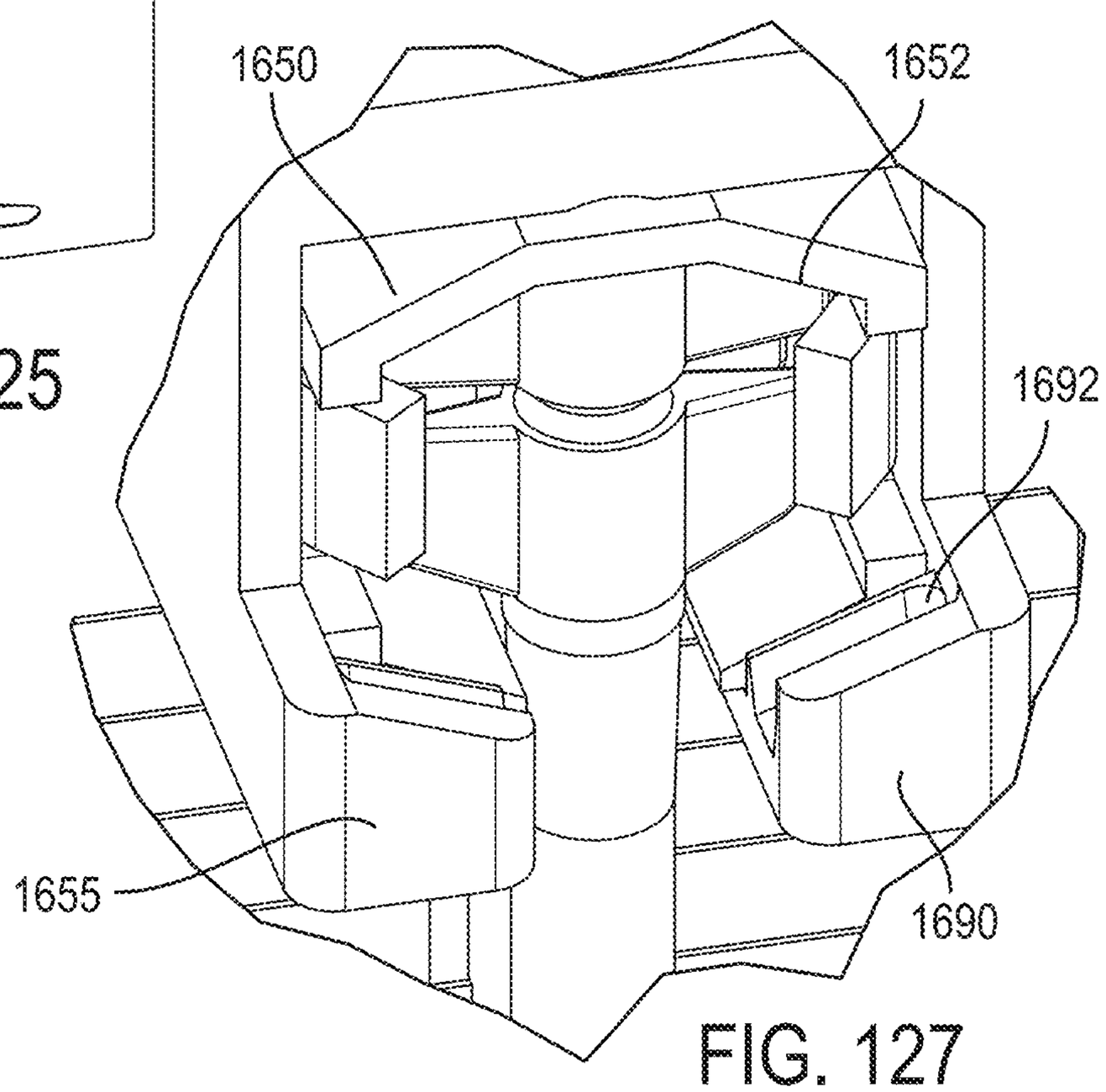

FIG. 127

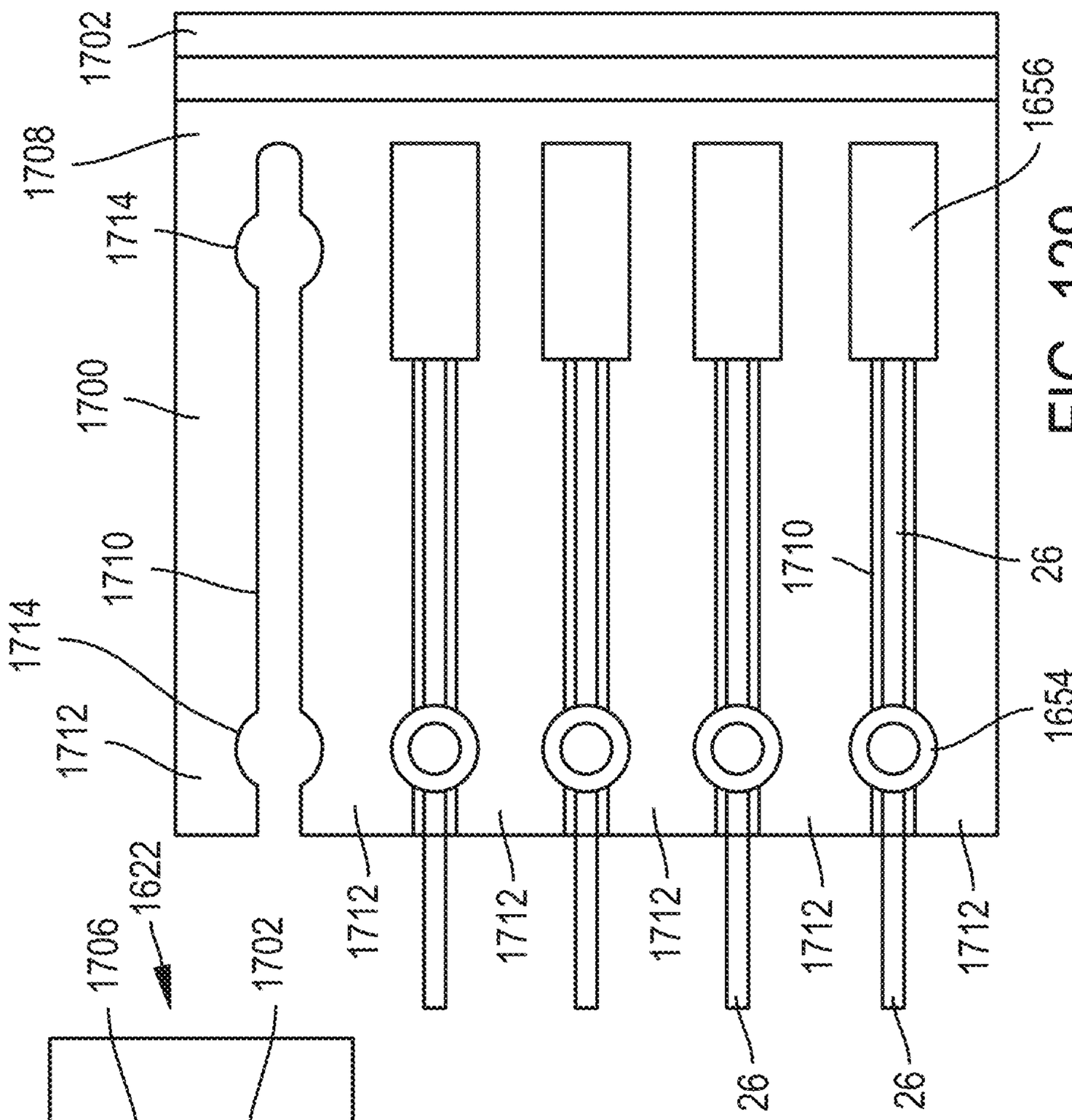

FIG. 129

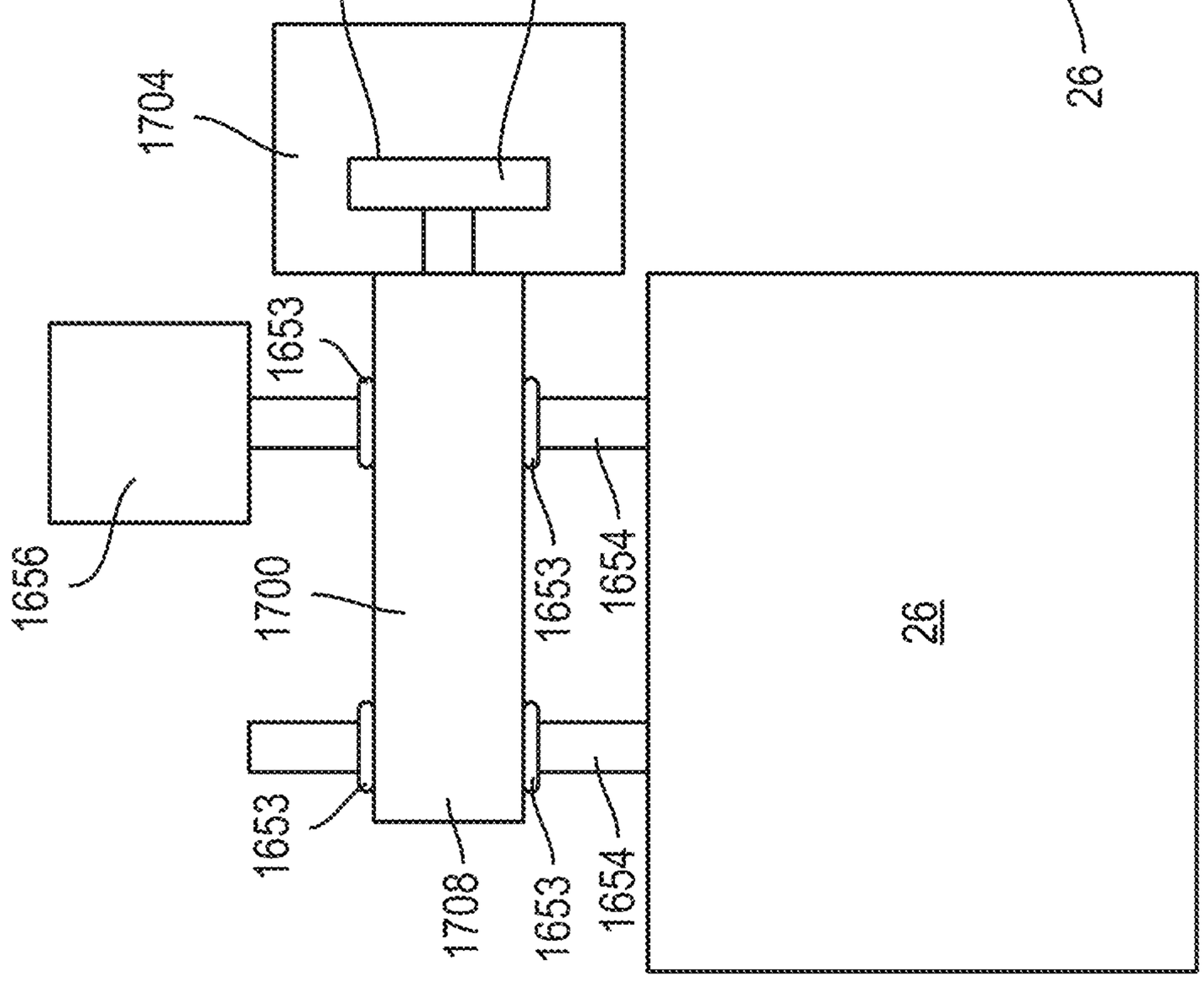

FIG. 128

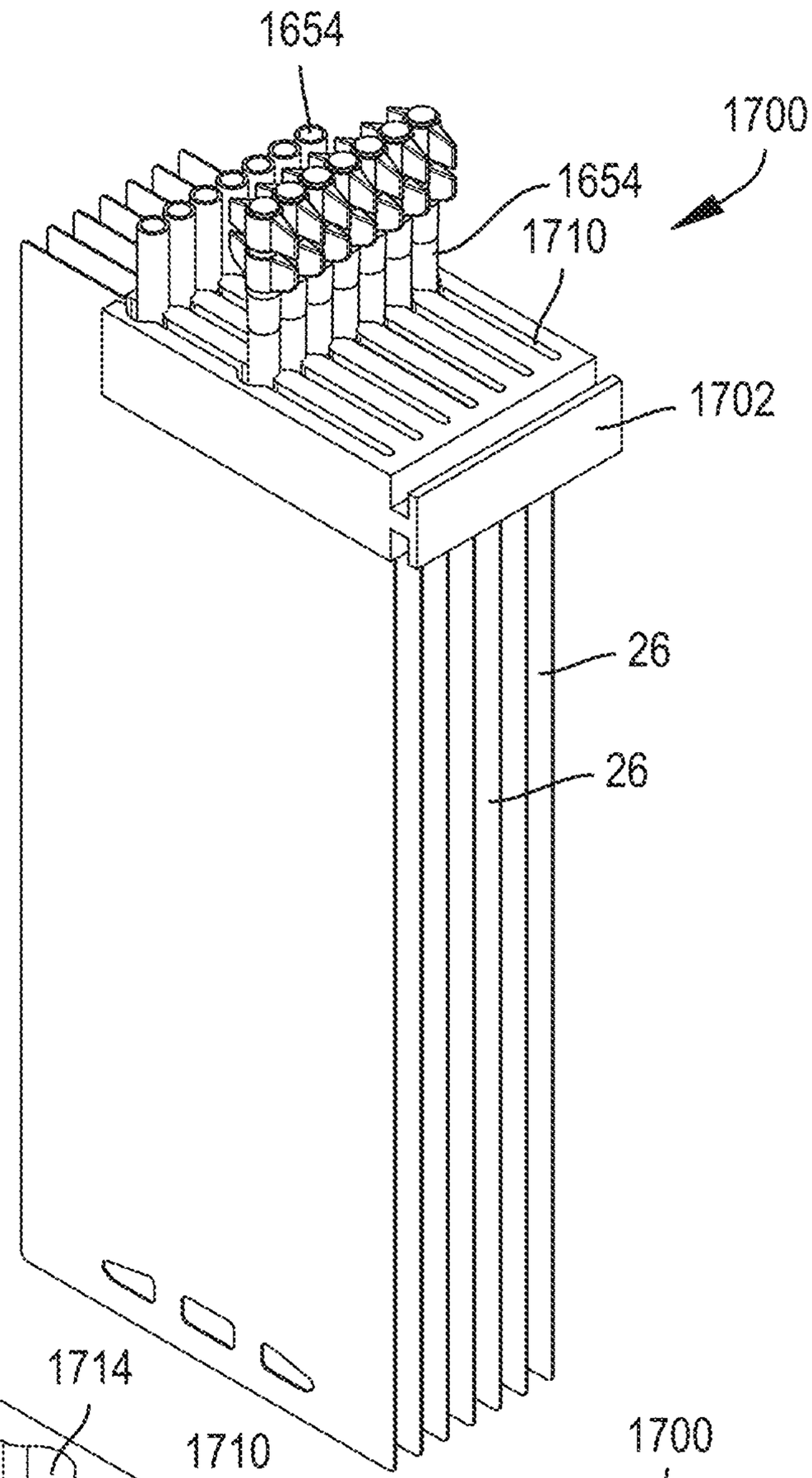

FIG. 130

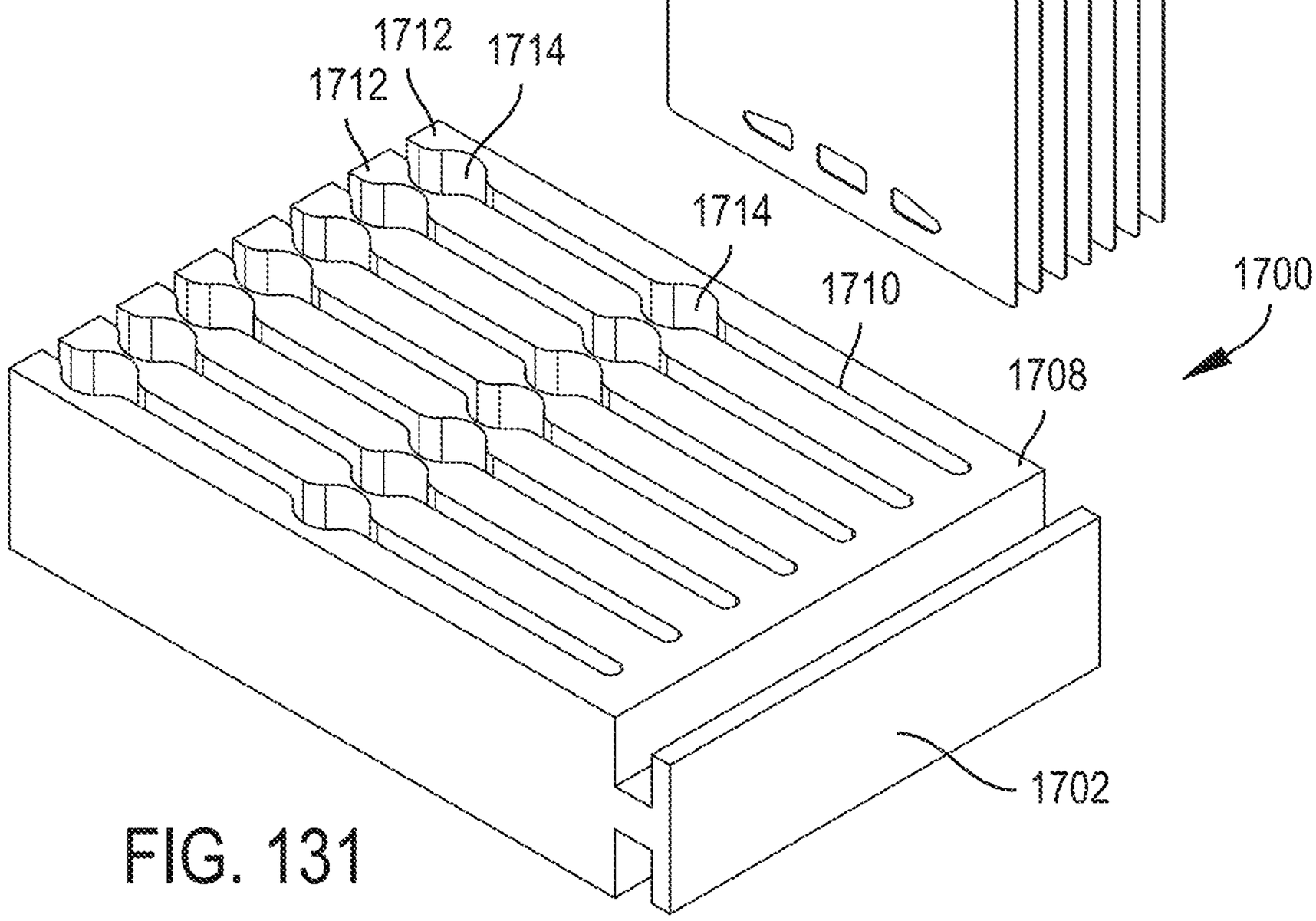

FIG. 131

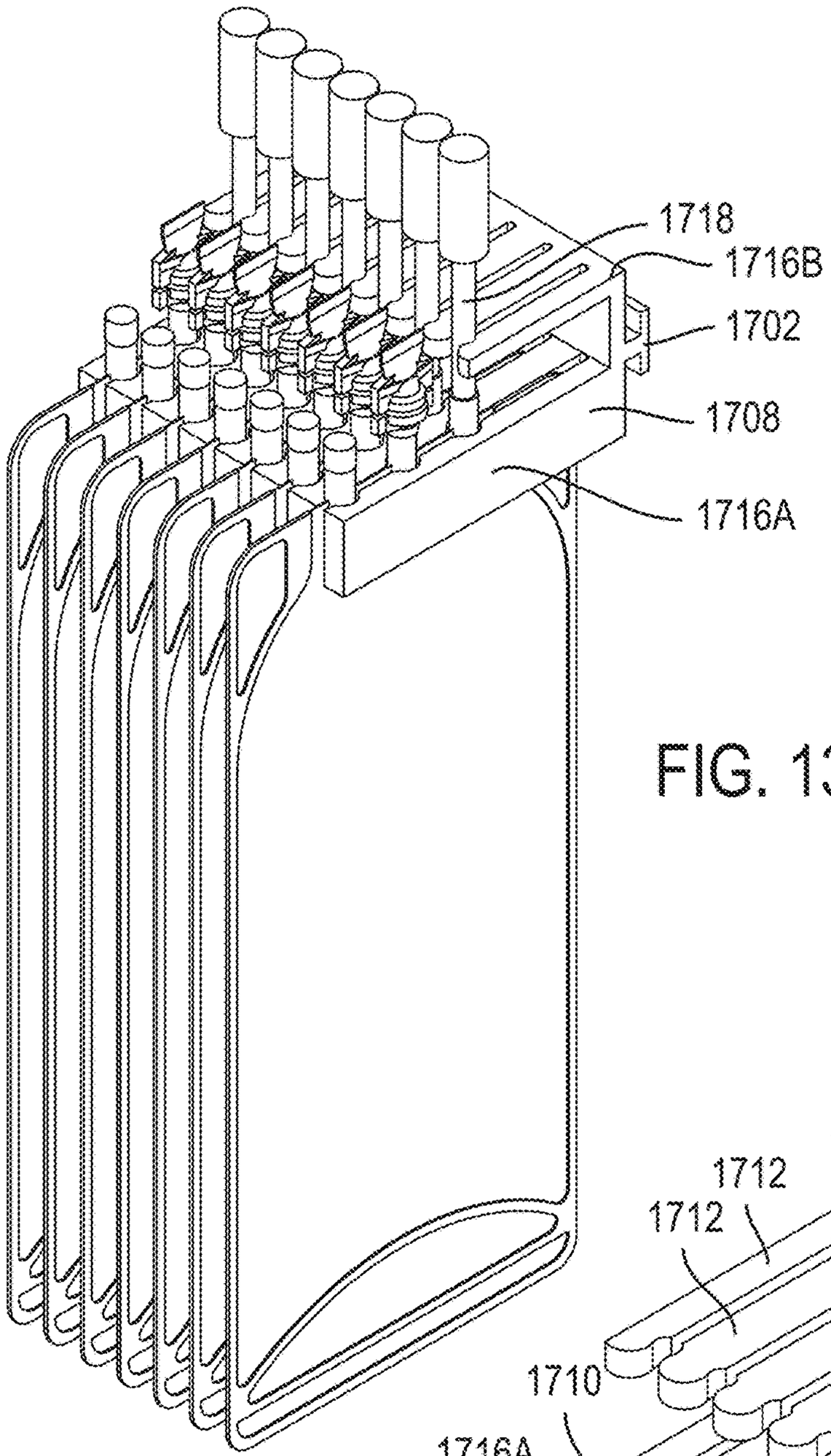

FIG. 132

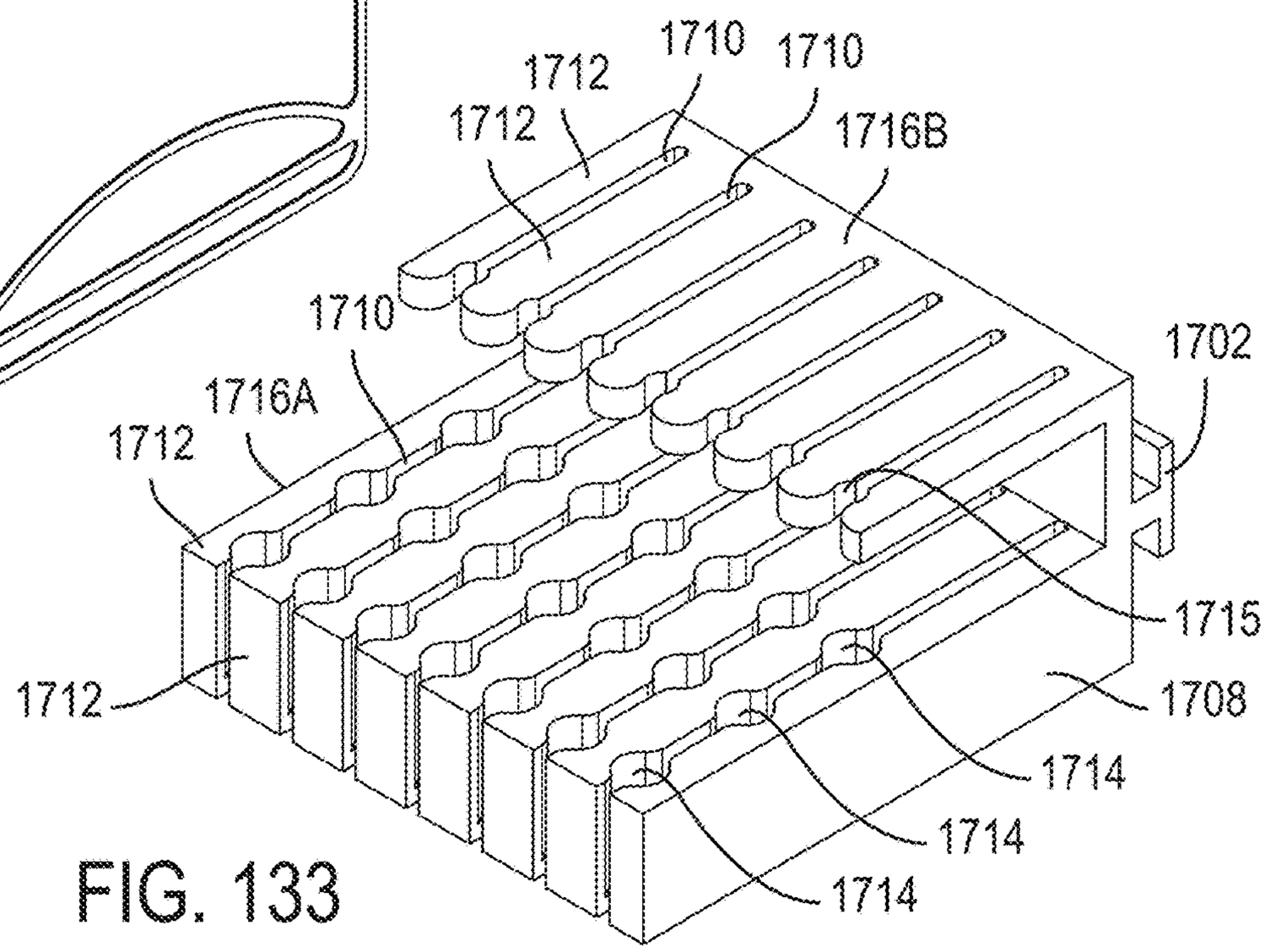

FIG. 133

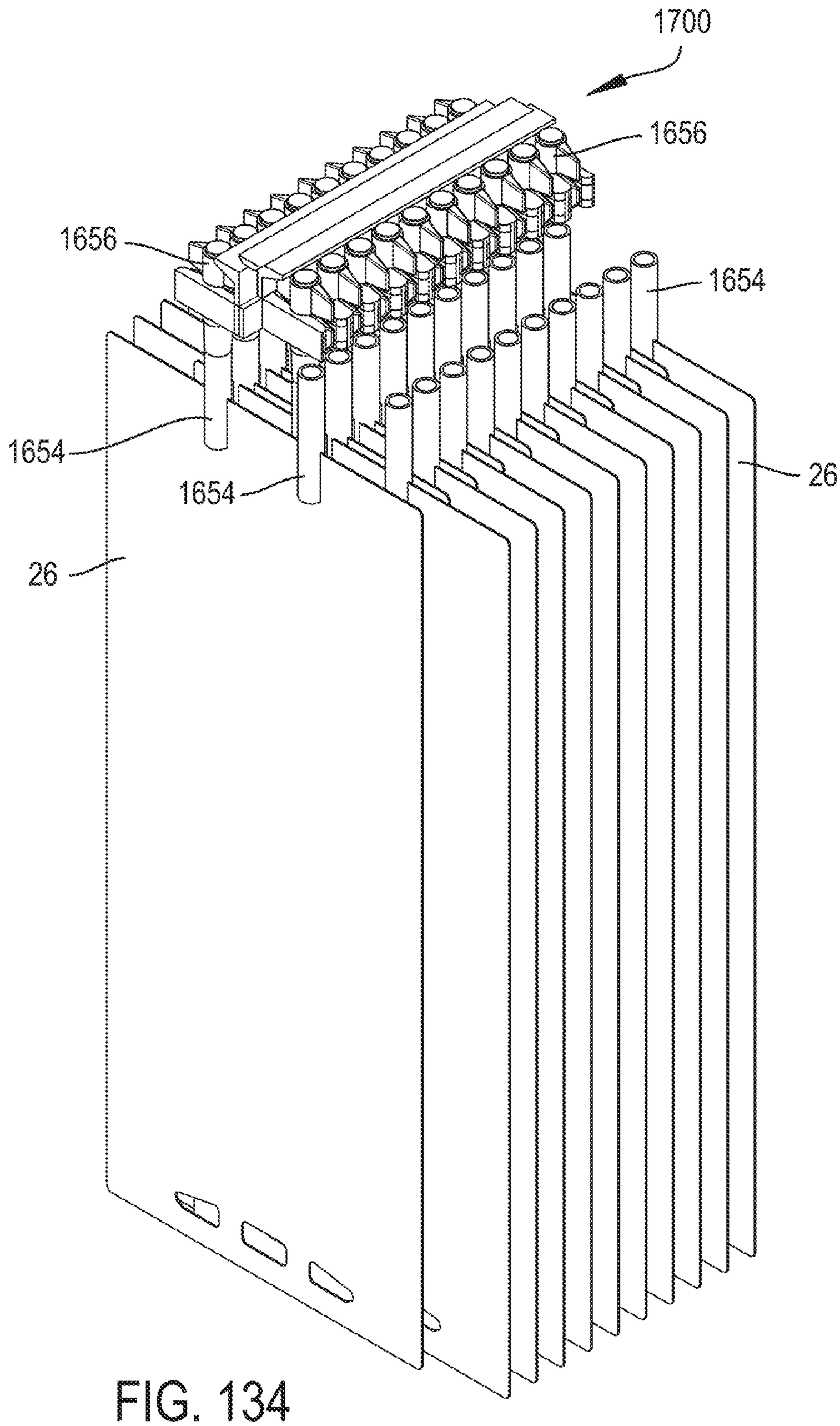

FIG. 134

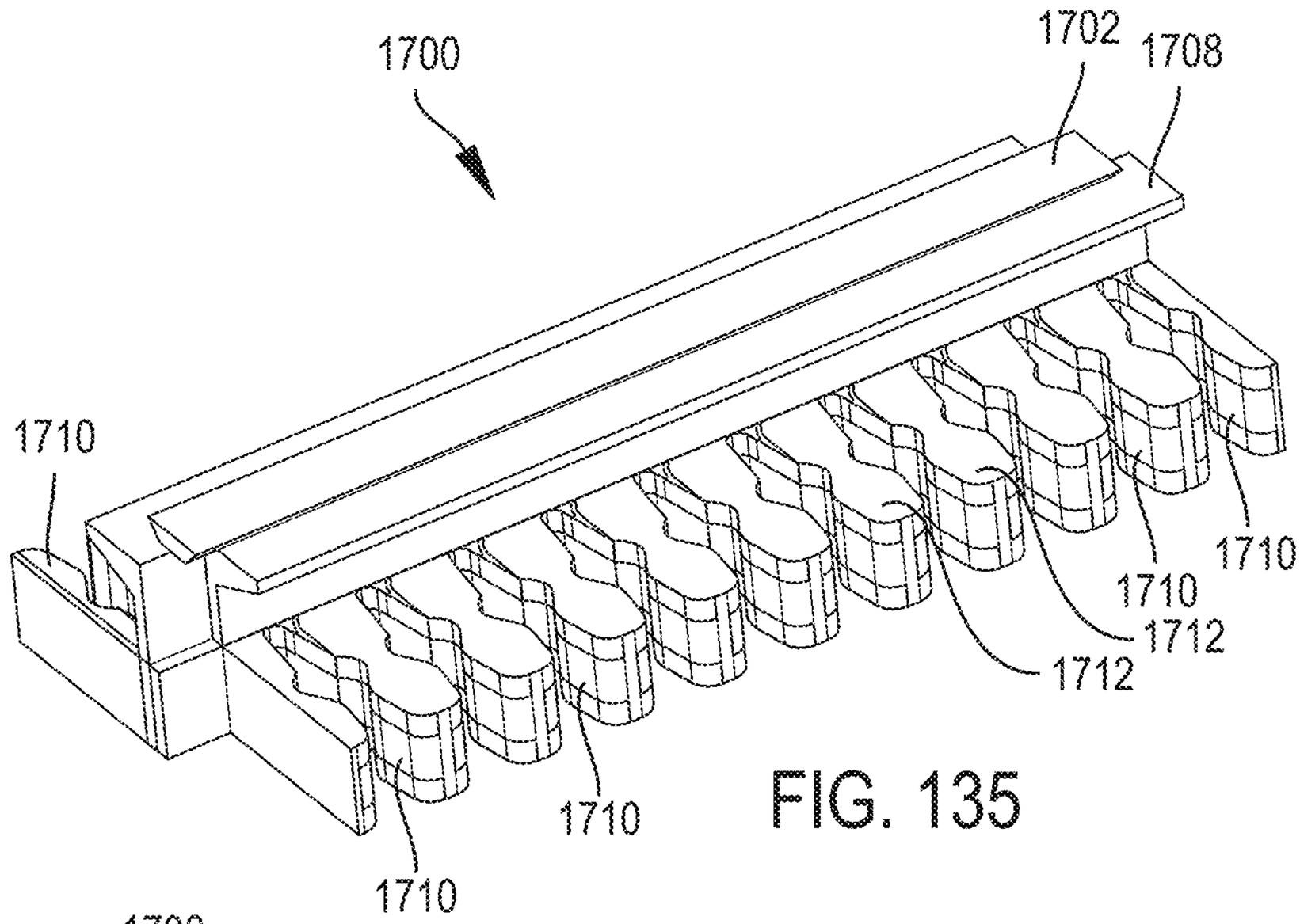

FIG. 135

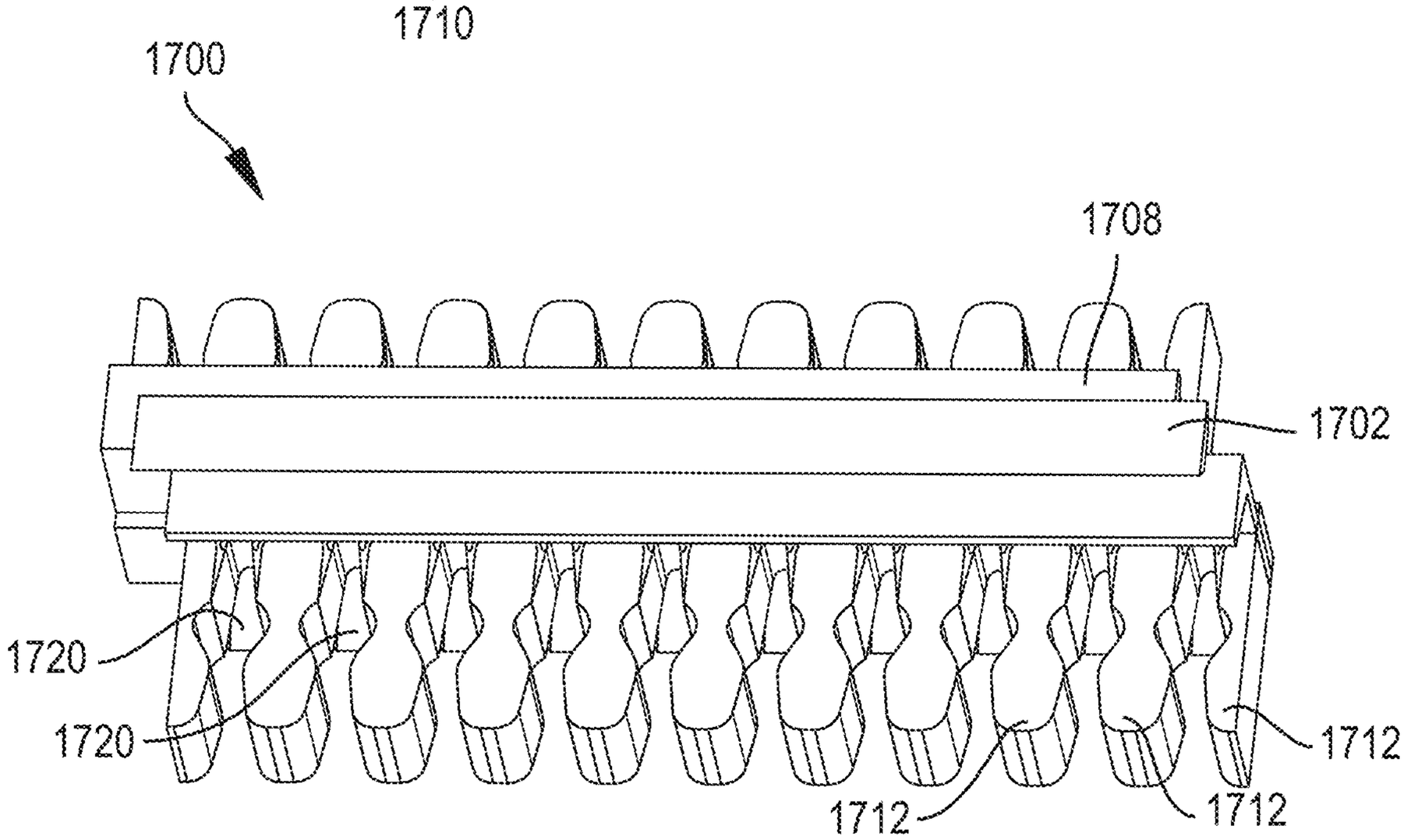

FIG. 136

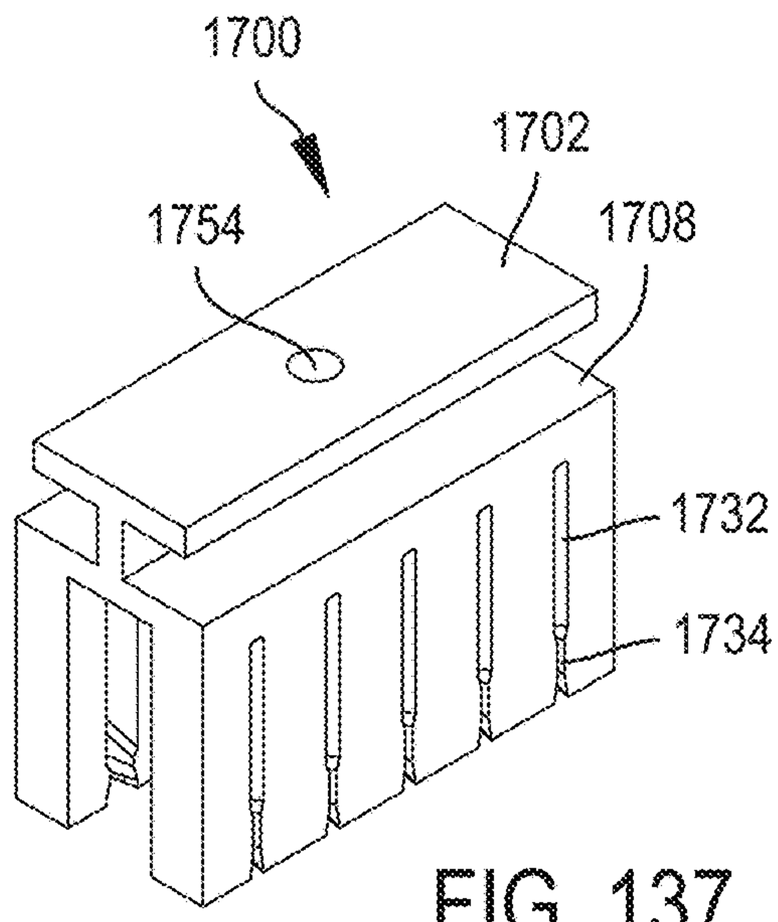

FIG. 137

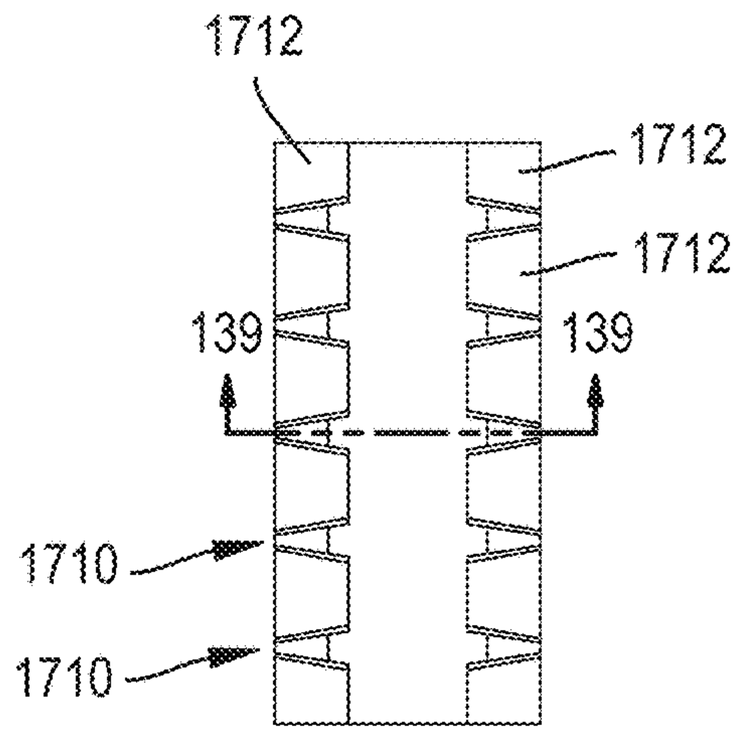

FIG. 138

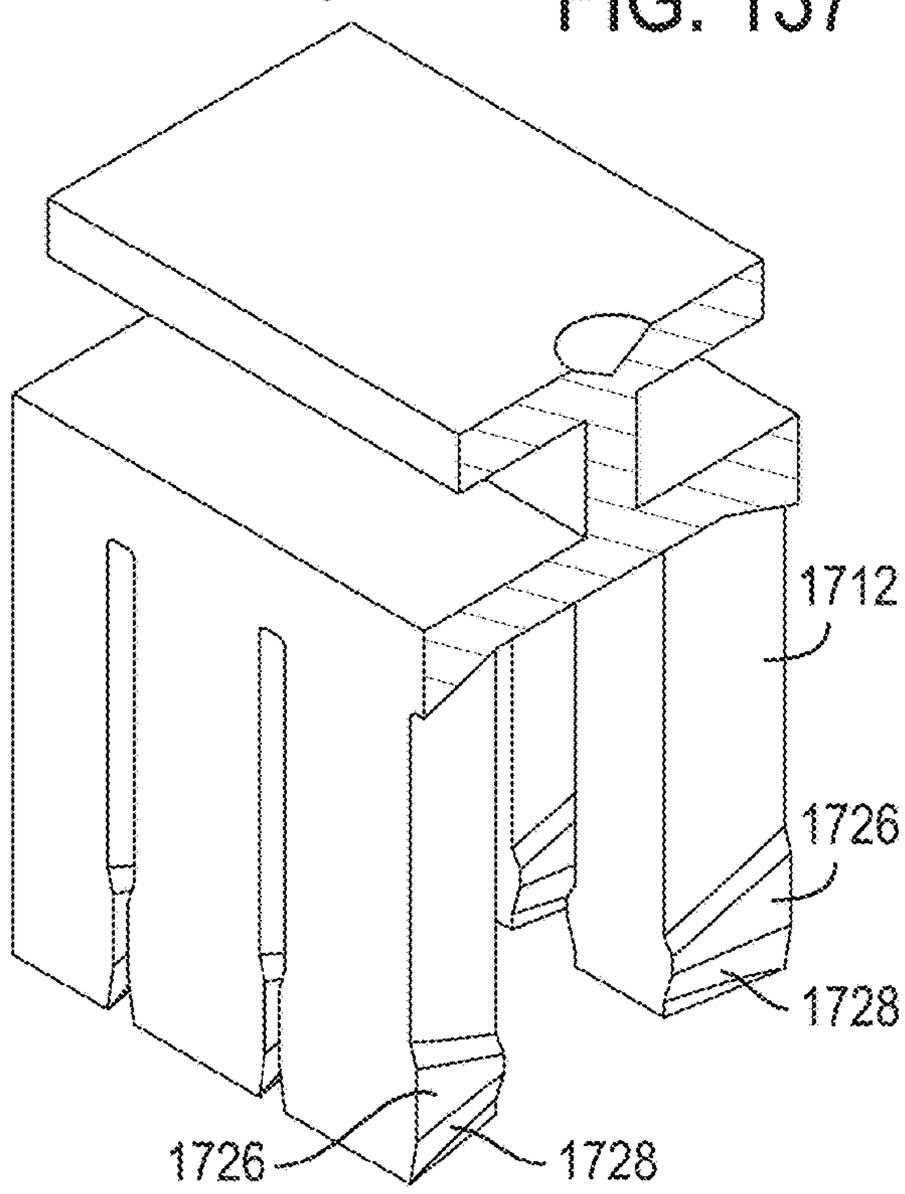

FIG. 139

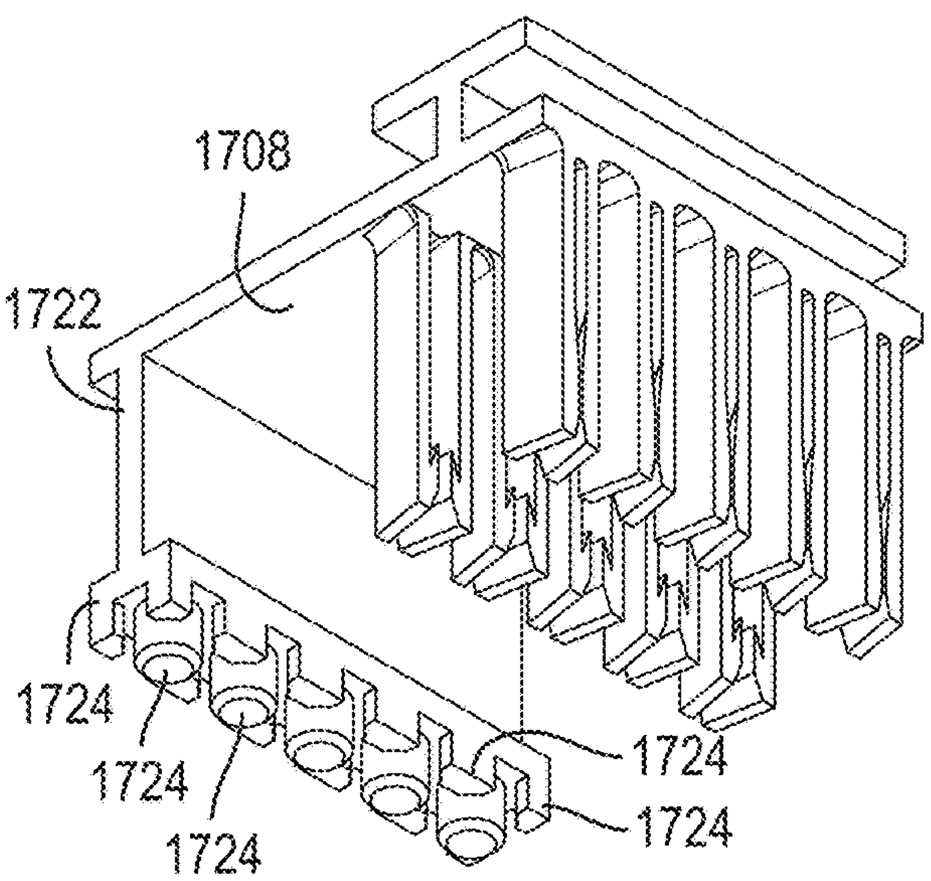

FIG. 140

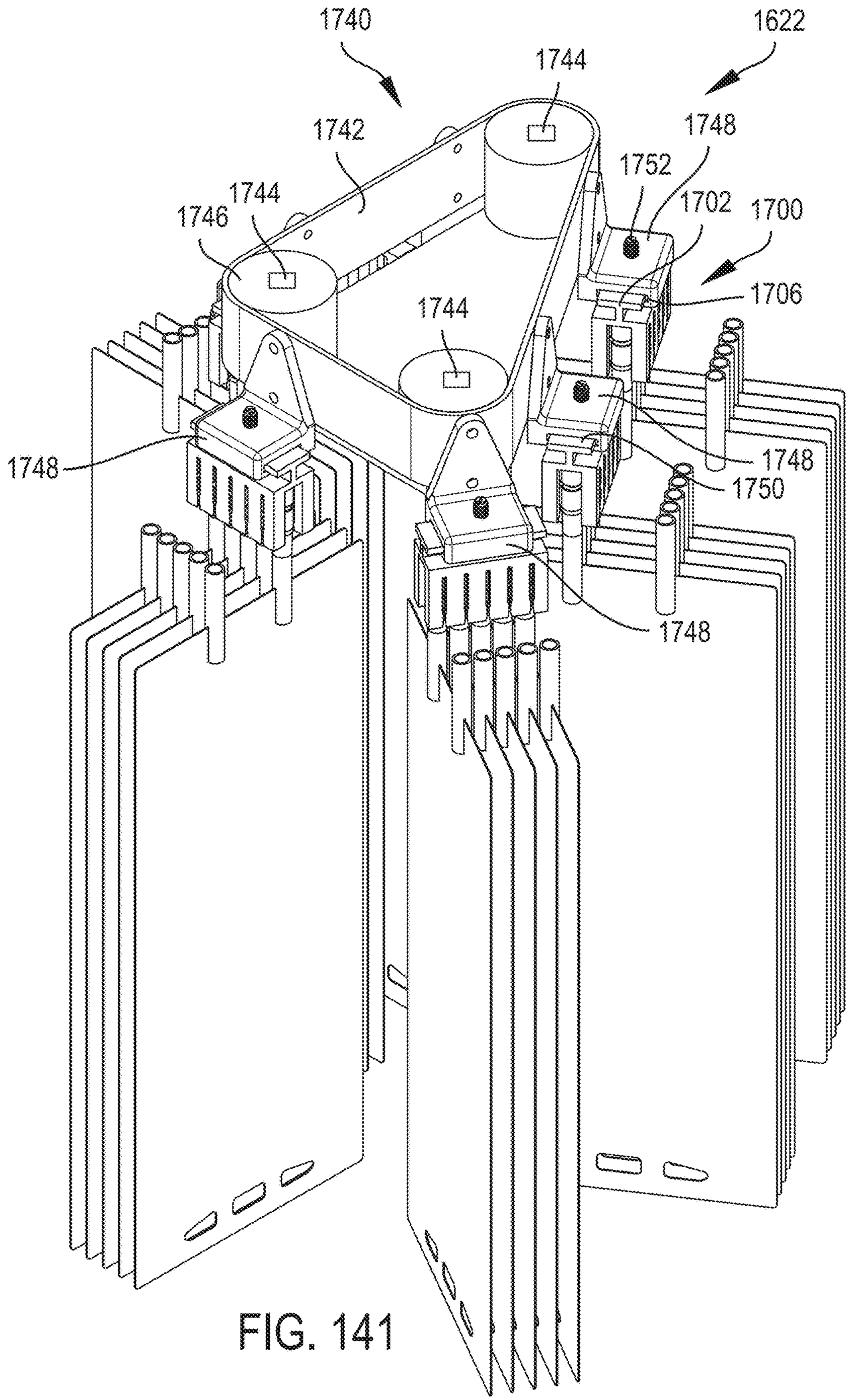
1740
1622
1744
1742
1748
1752
1744
1746
1702
1700
1706
1744
1748
1748
1750
1748

FIG. 141

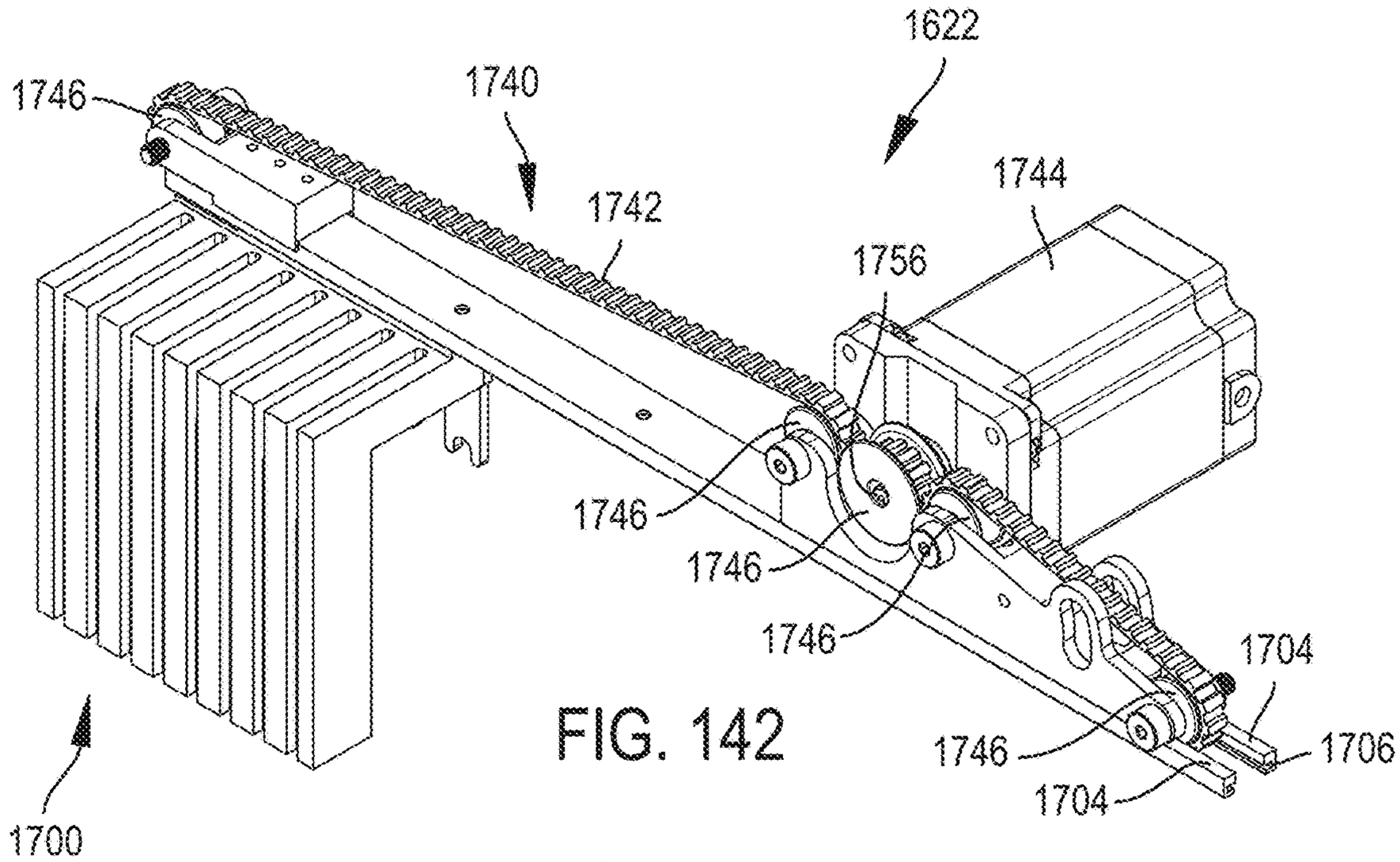

FIG. 142

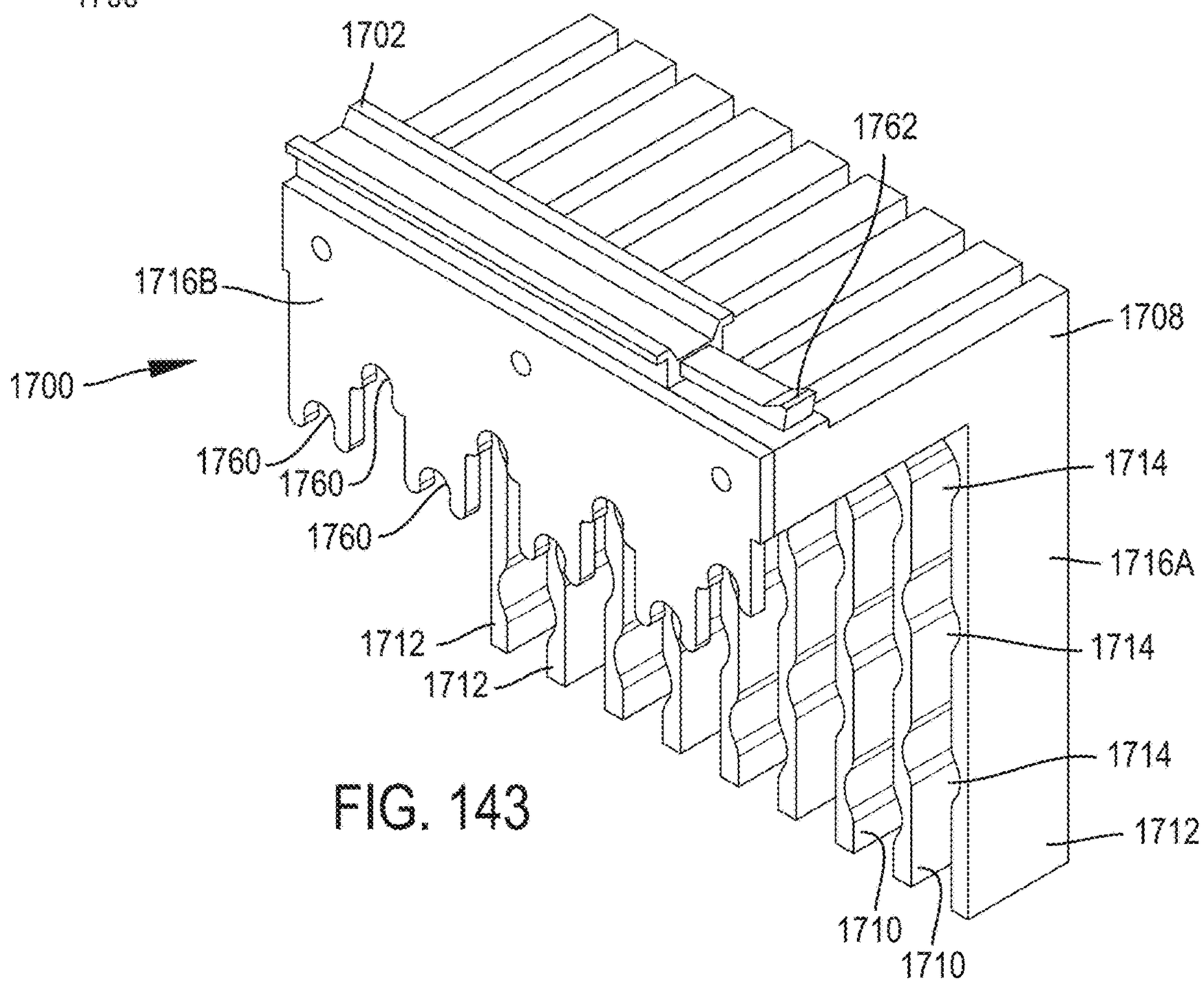

FIG. 143

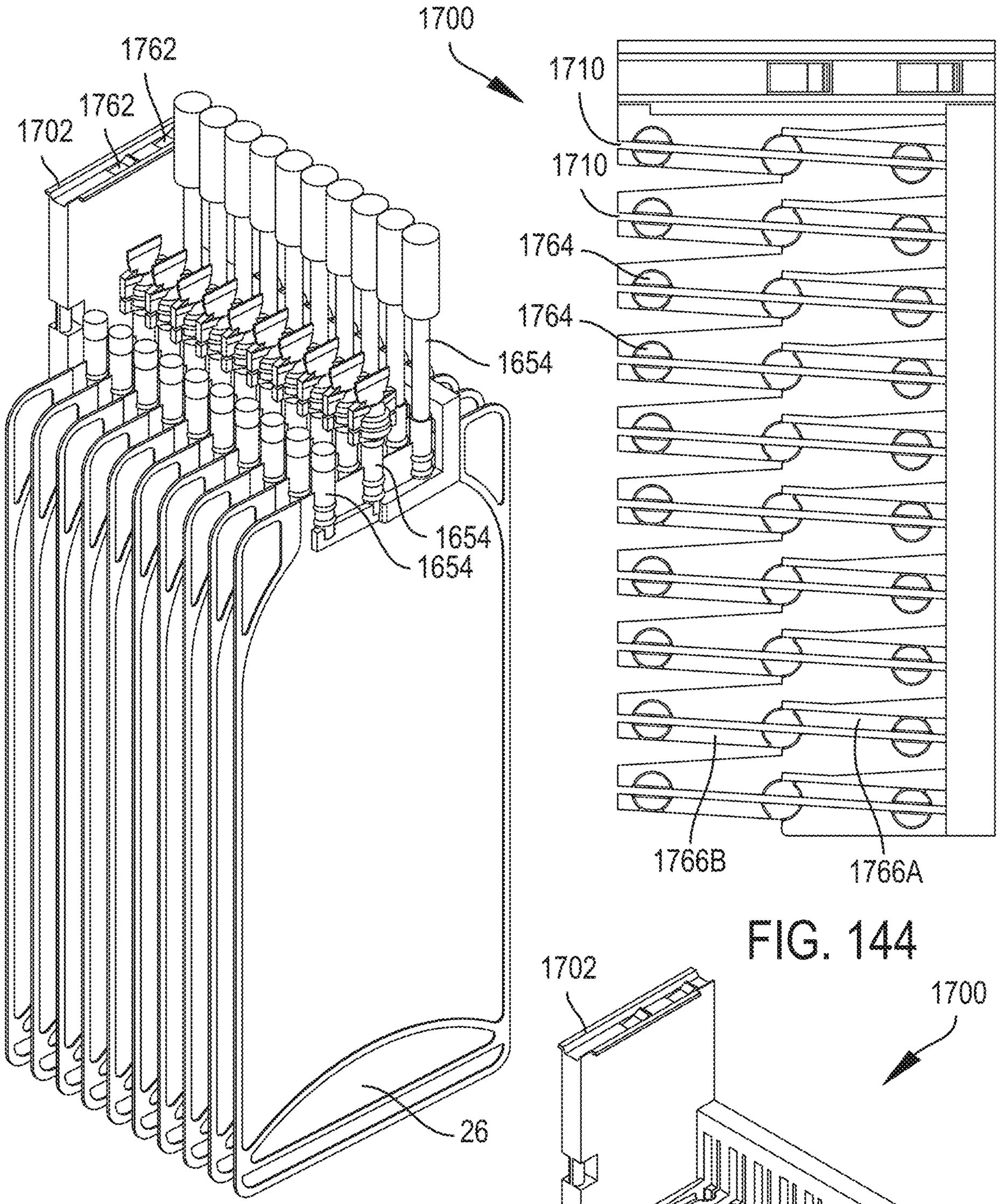

FIG. 144

FIG. 146

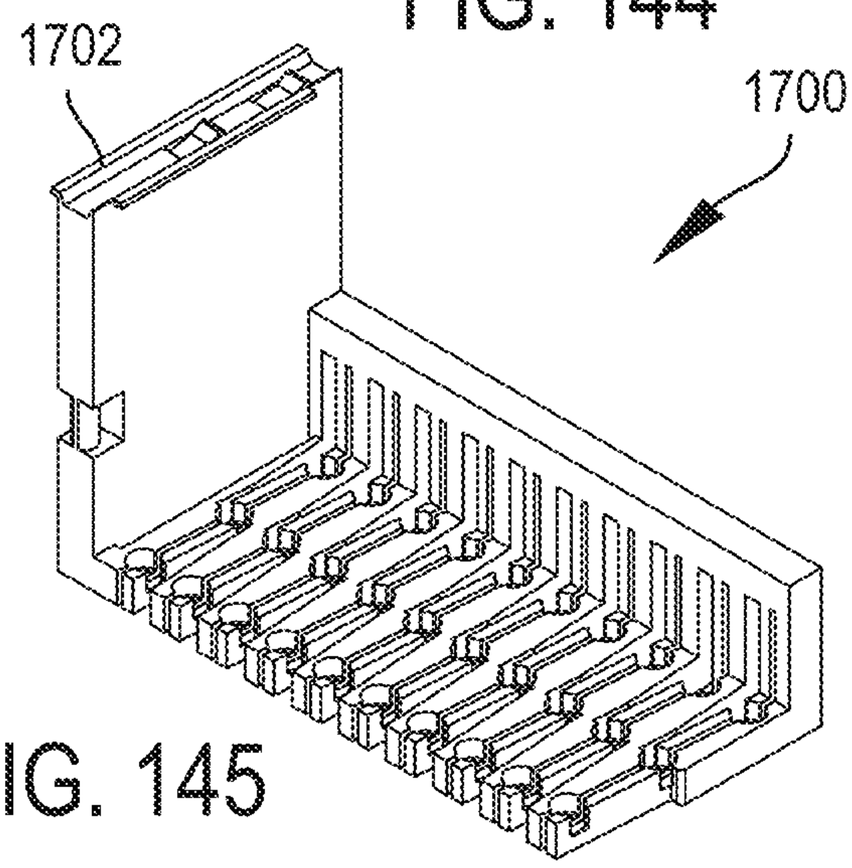

FIG. 145

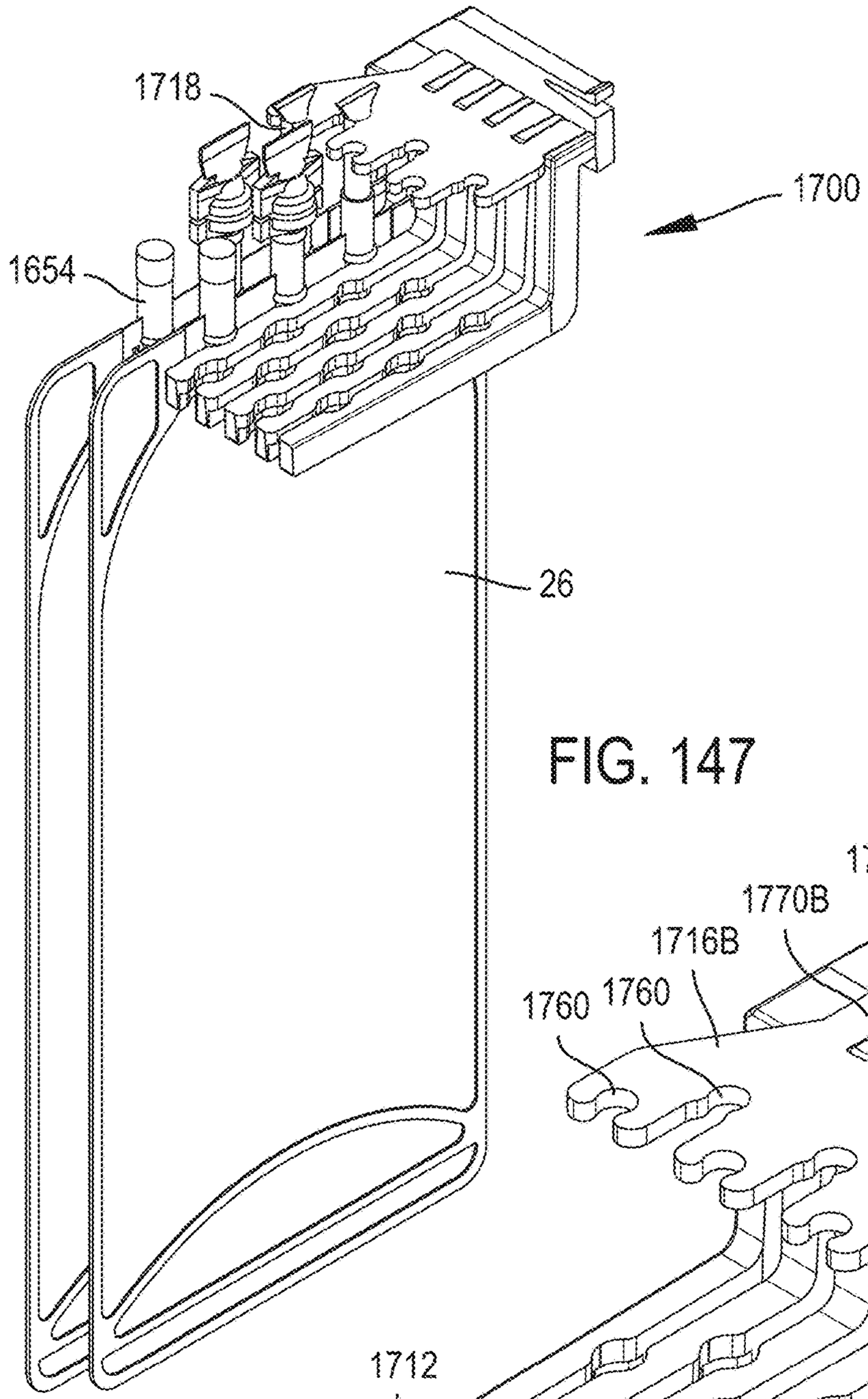

FIG. 147

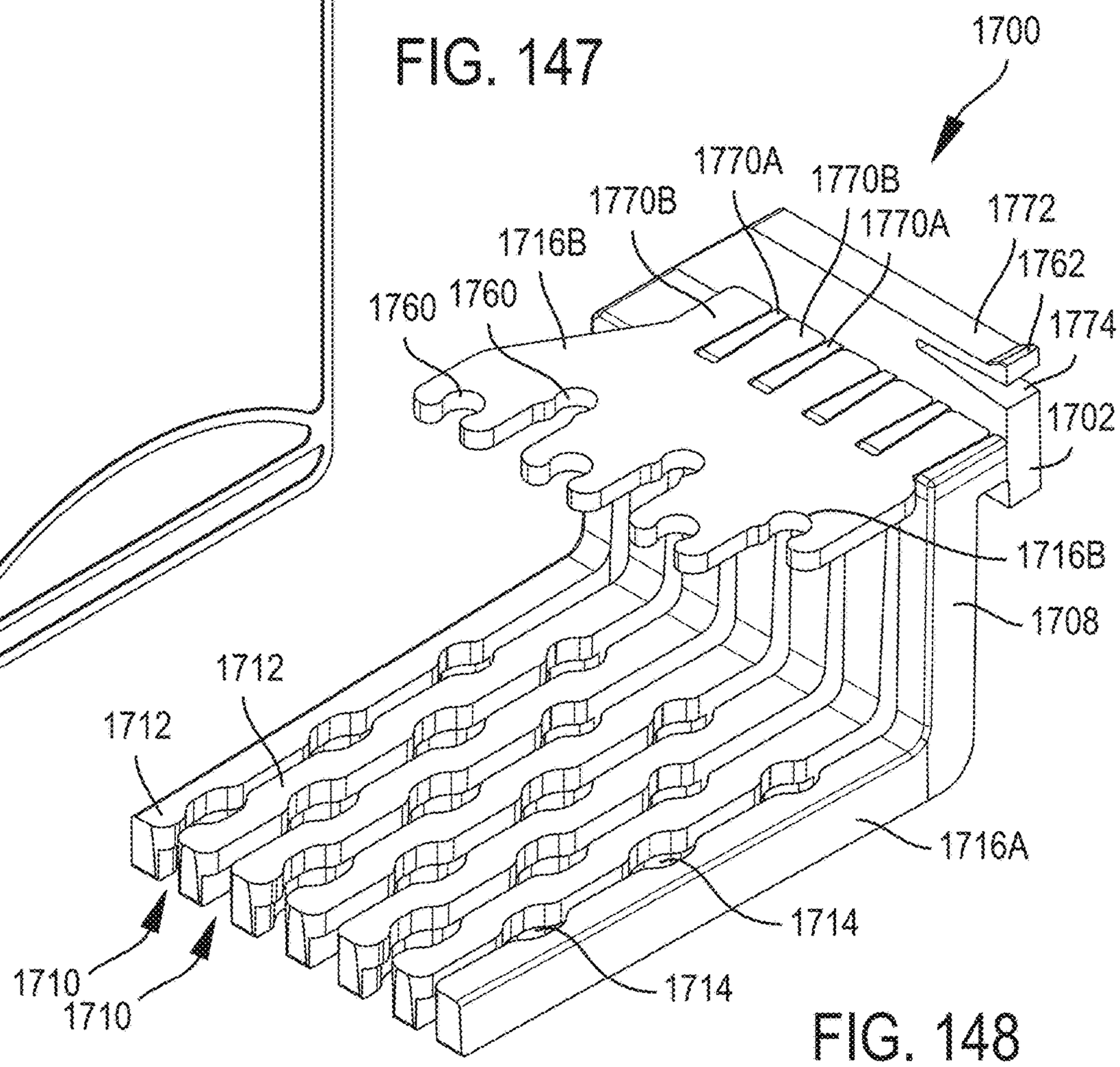

FIG. 148

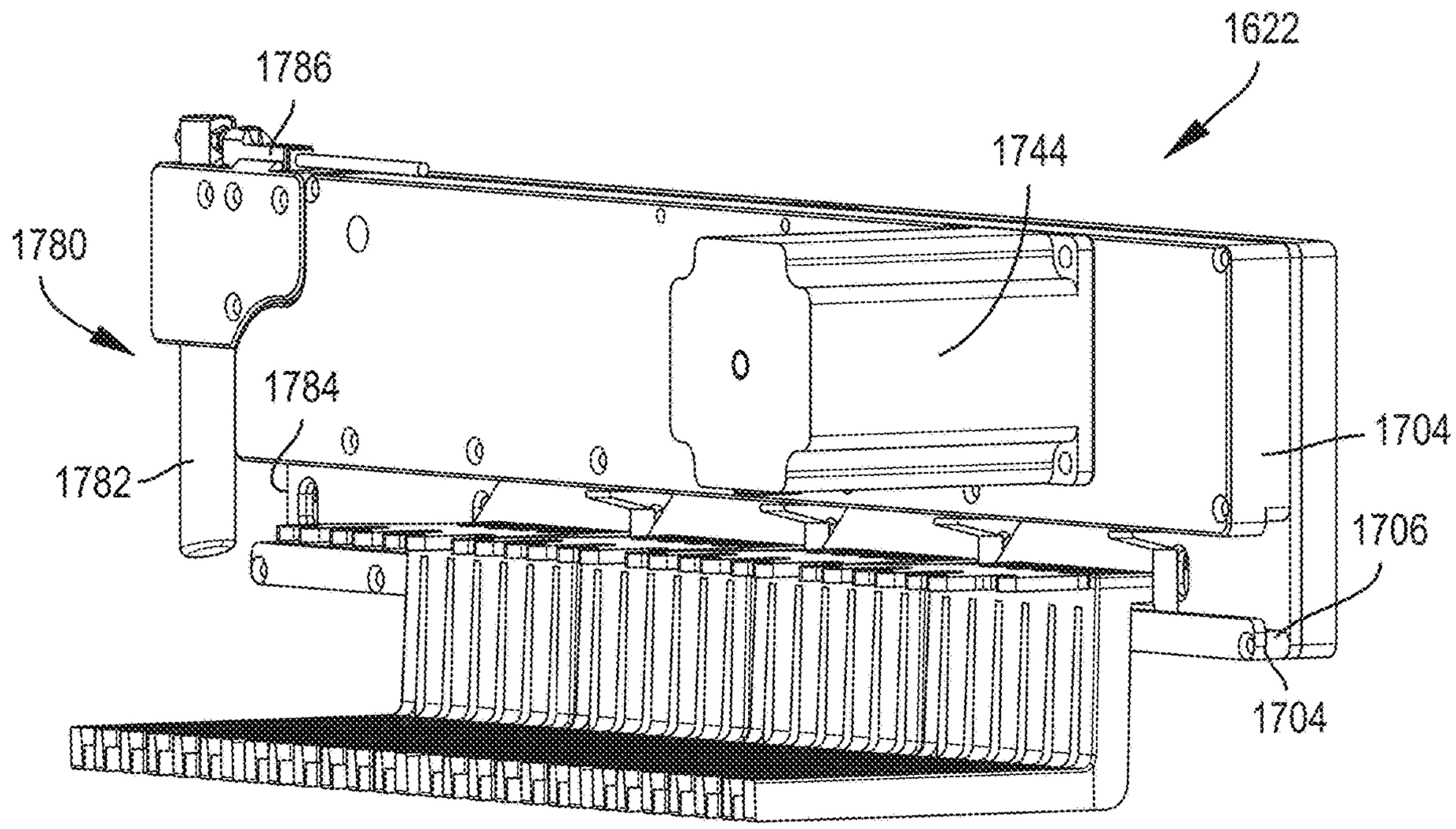

FIG. 149

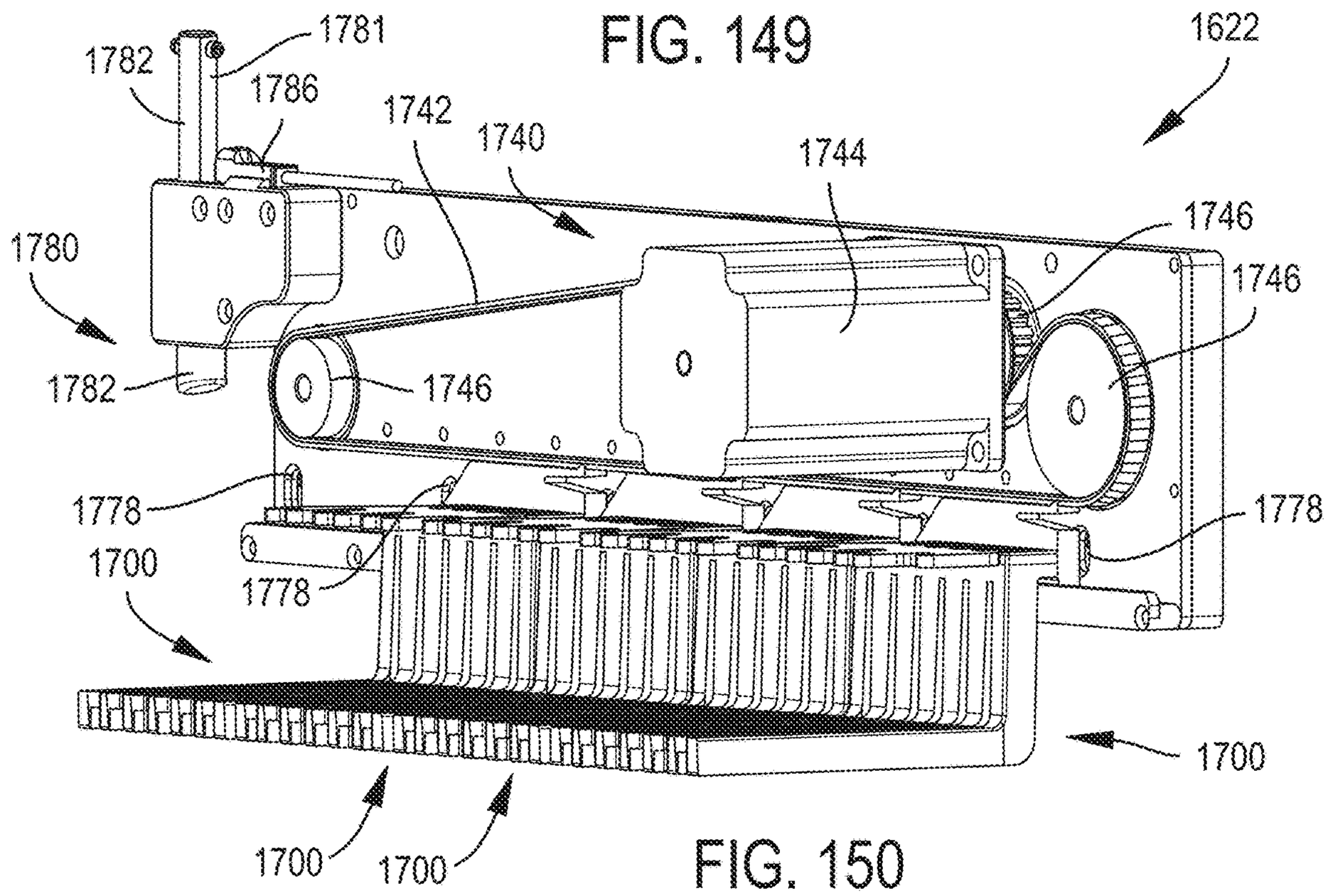

FIG. 150

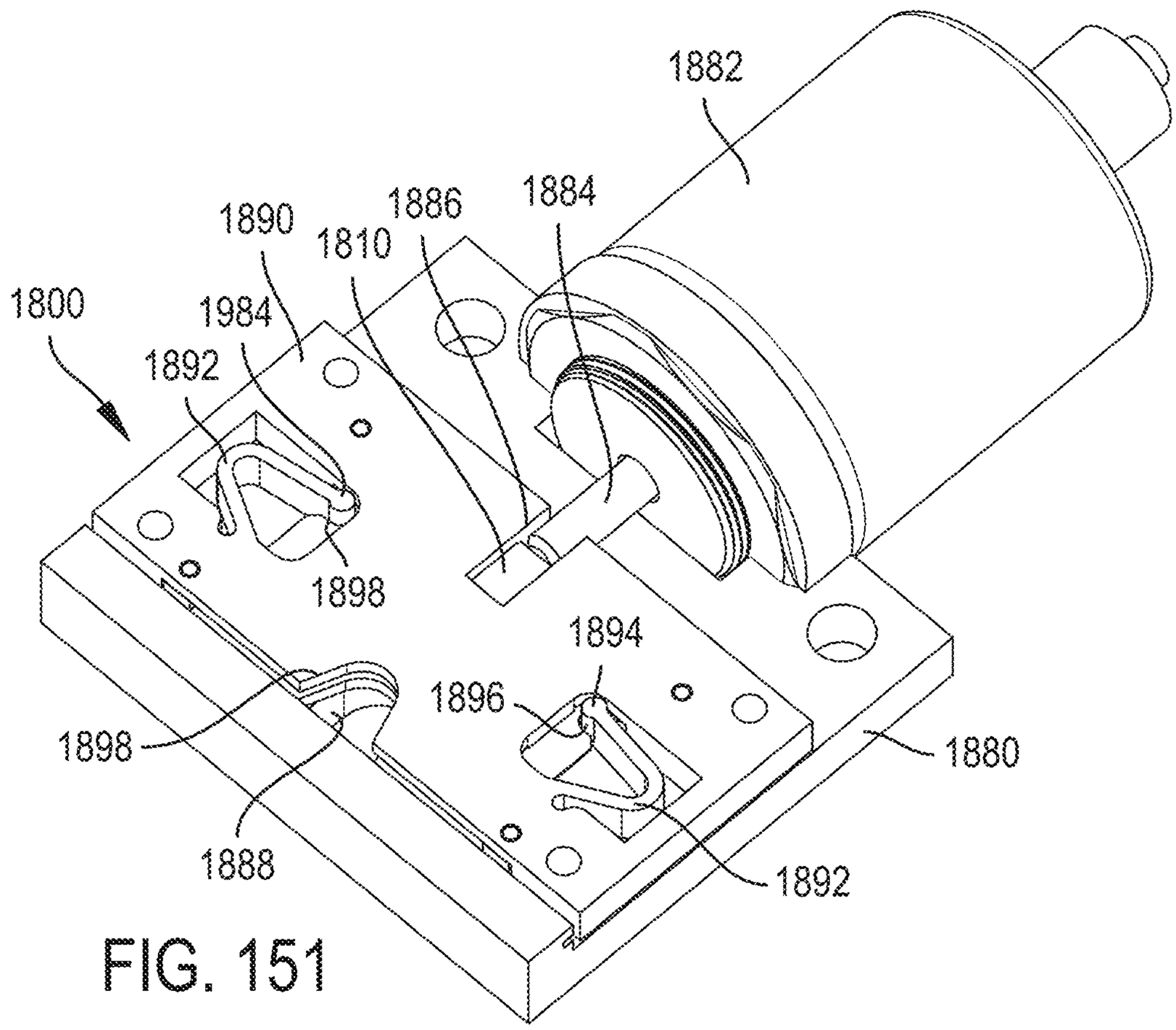

FIG. 151

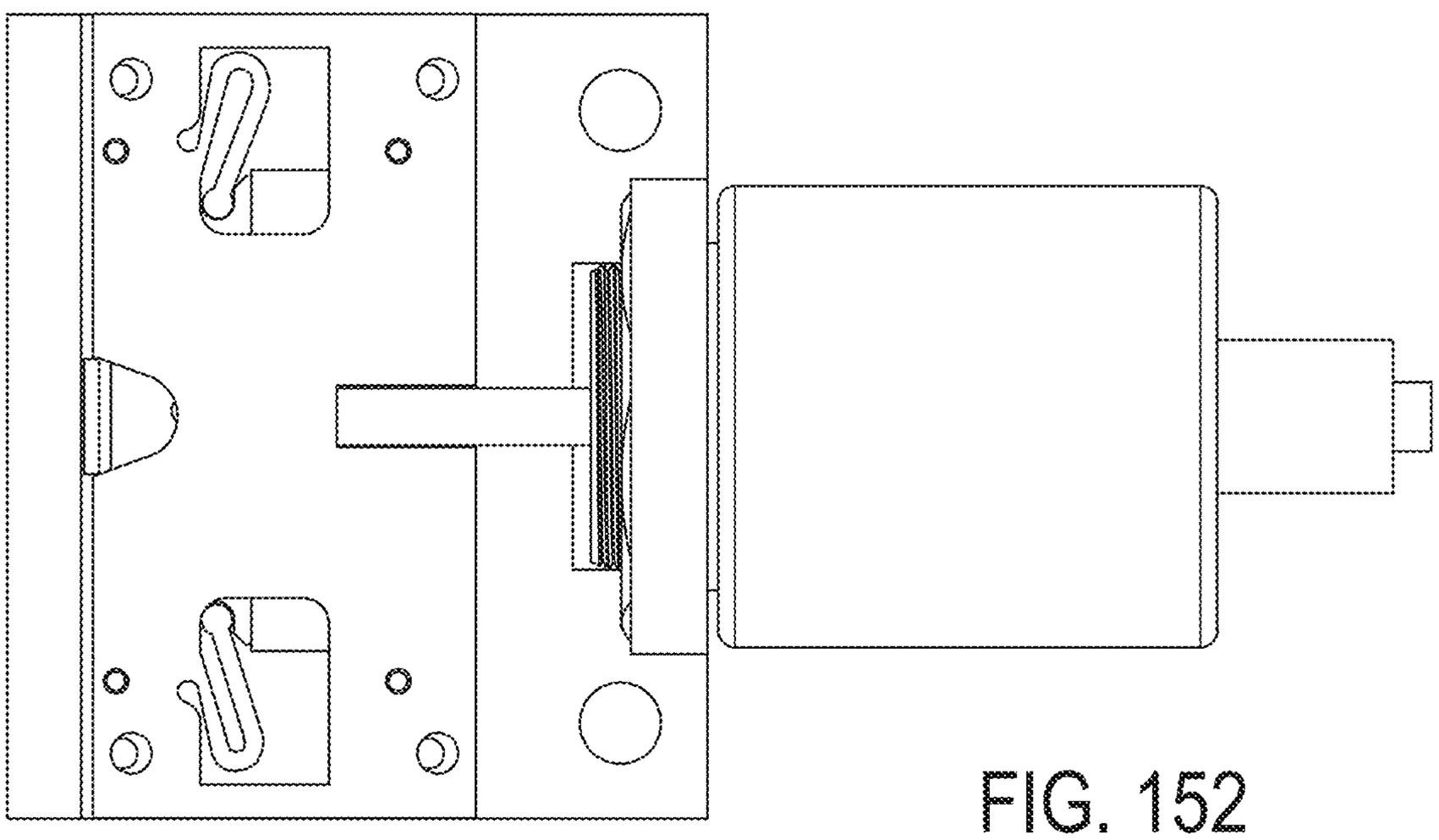

FIG. 152

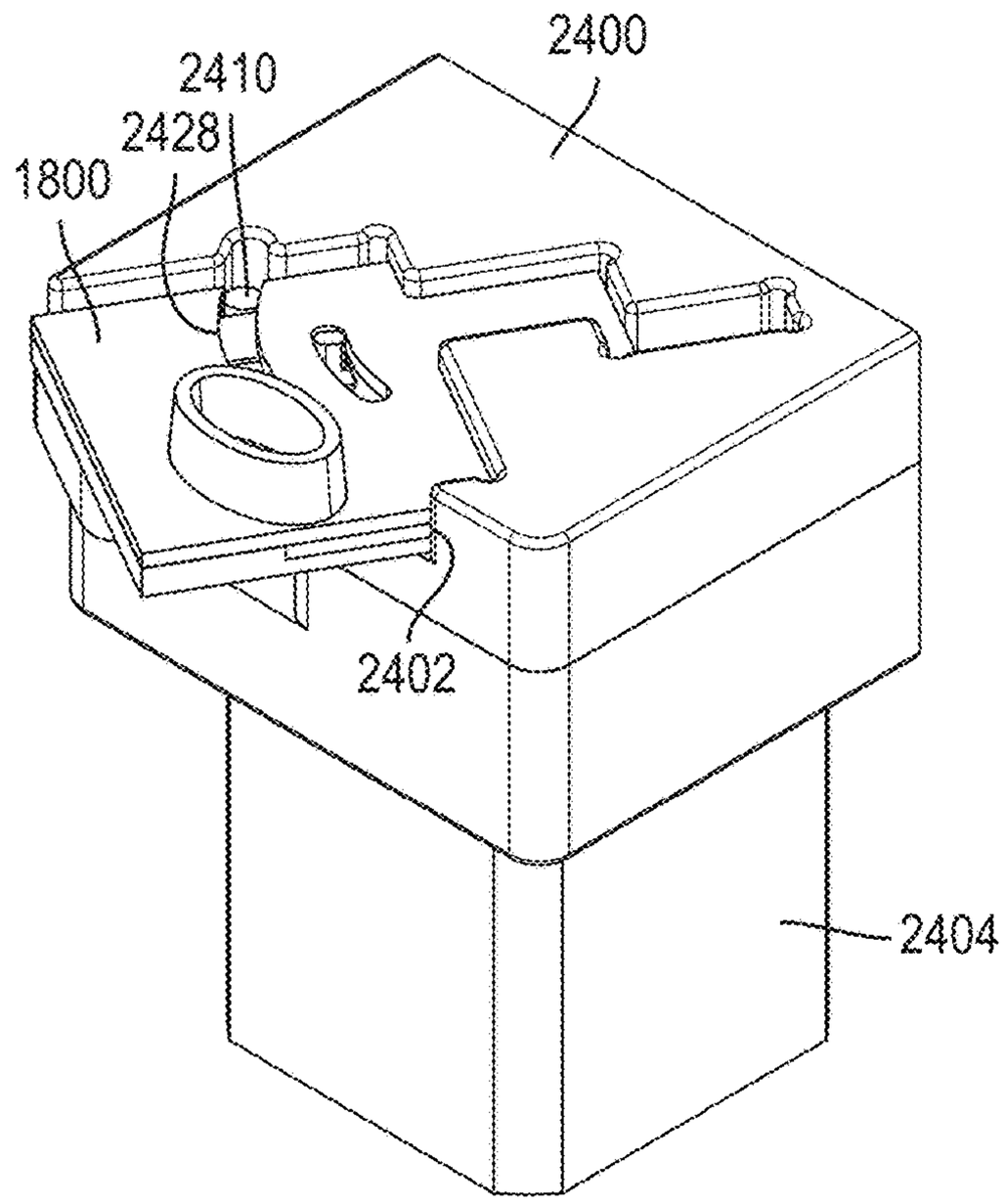

FIG. 153

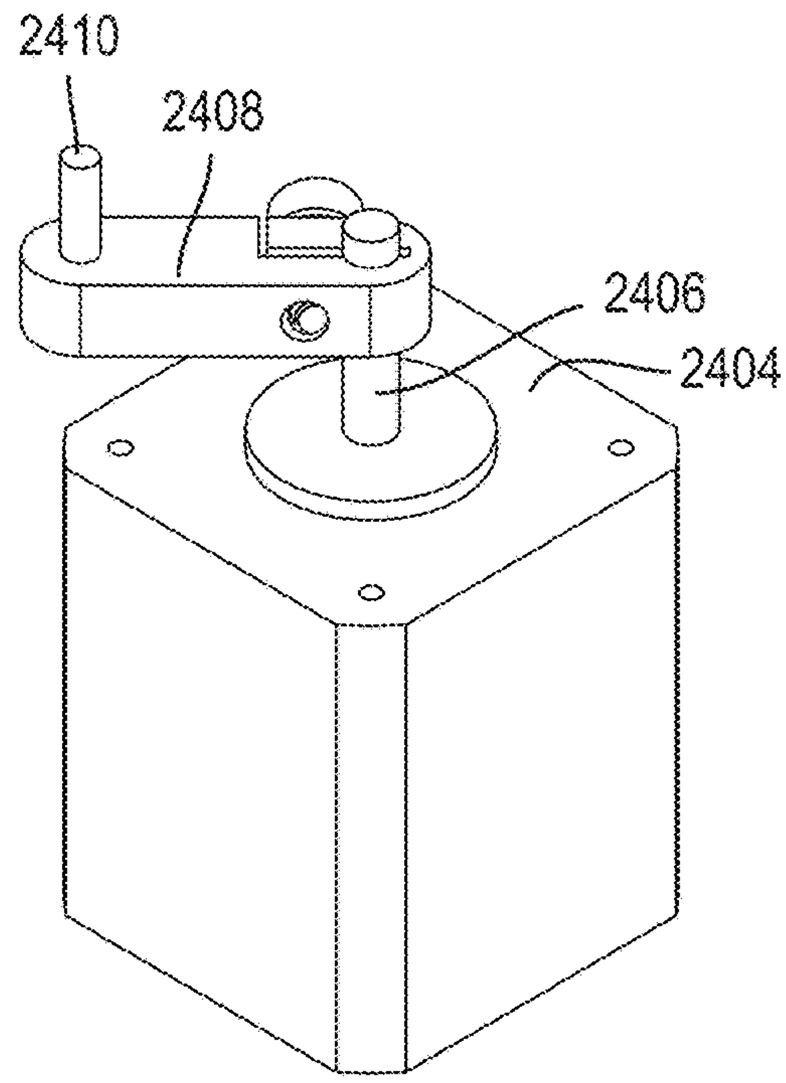

FIG. 154

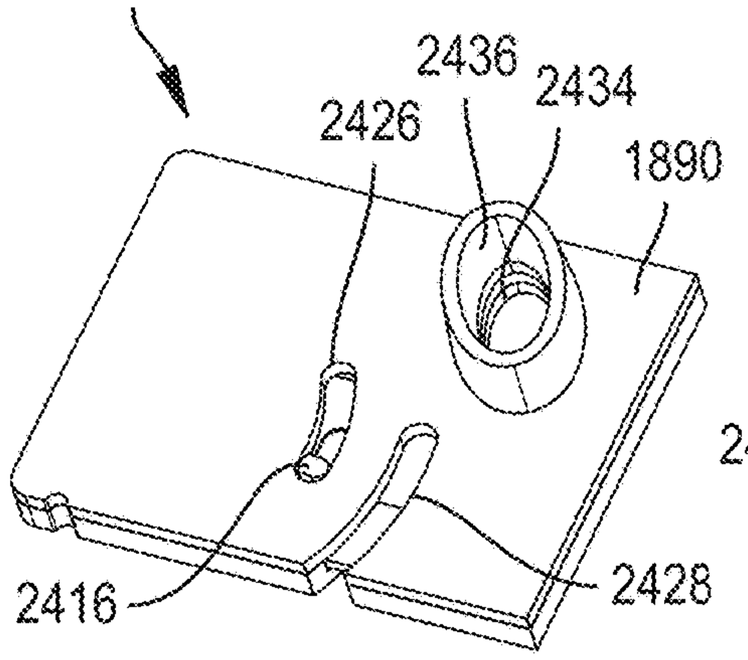

FIG. 155

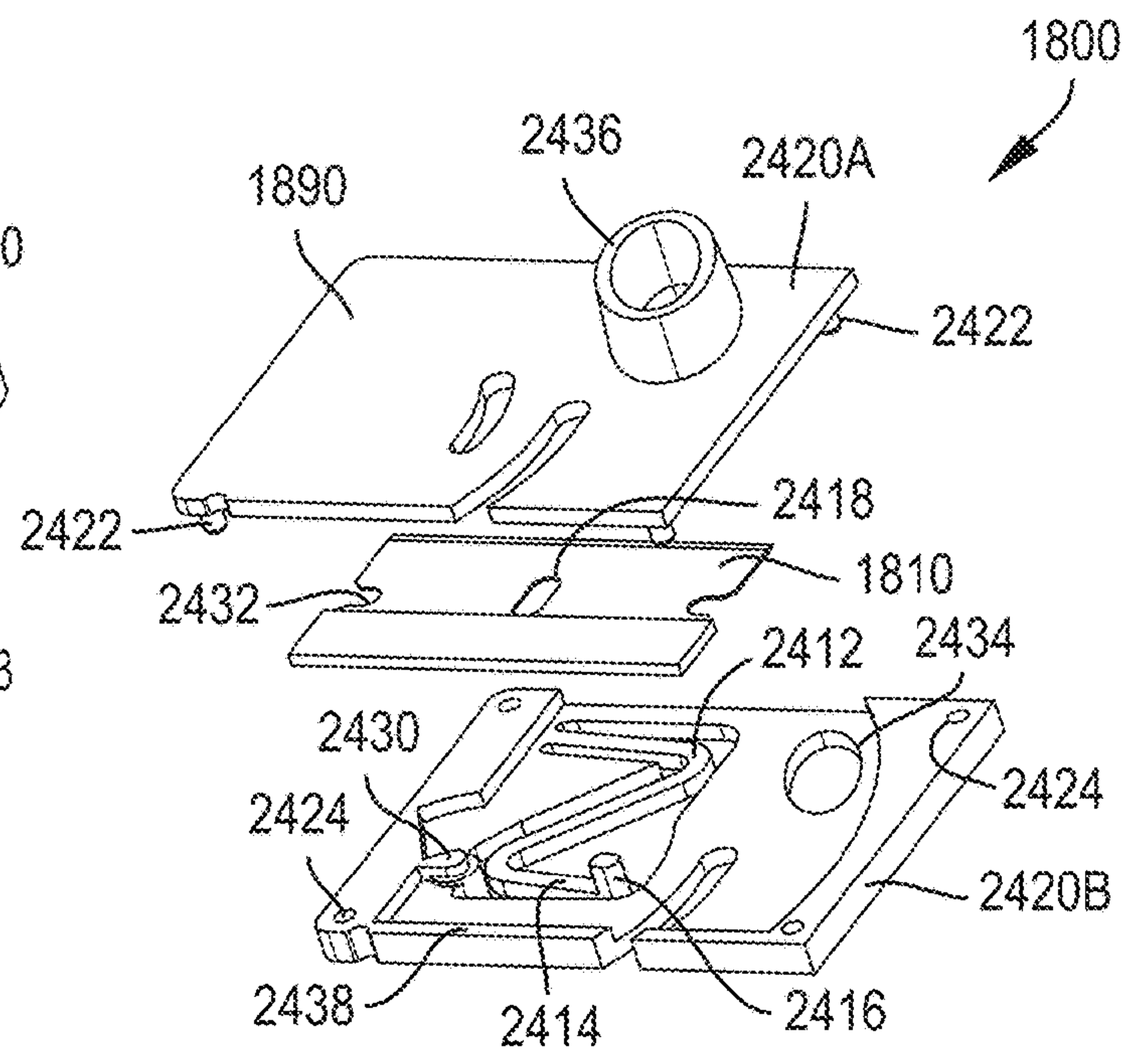

FIG. 156

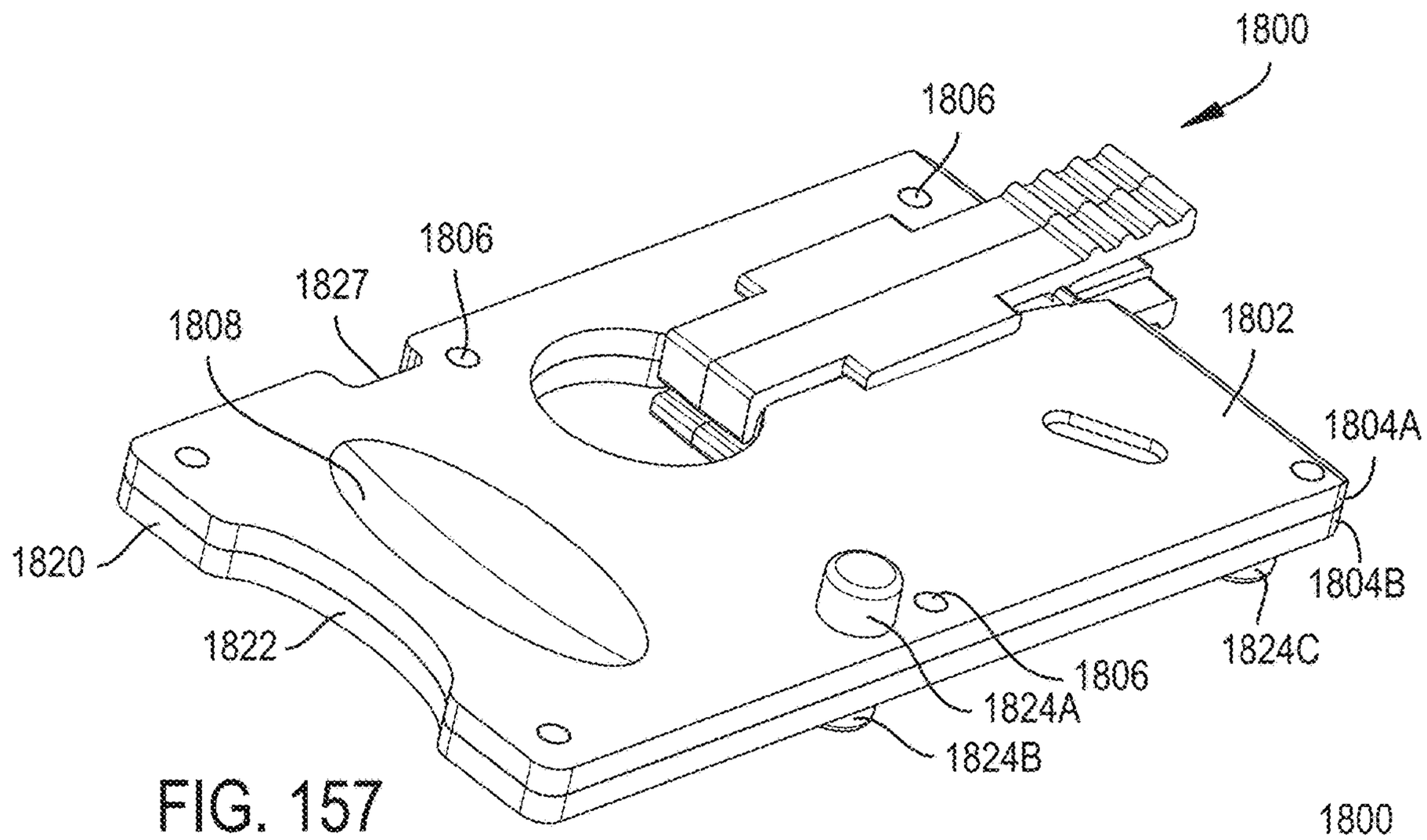

FIG. 157

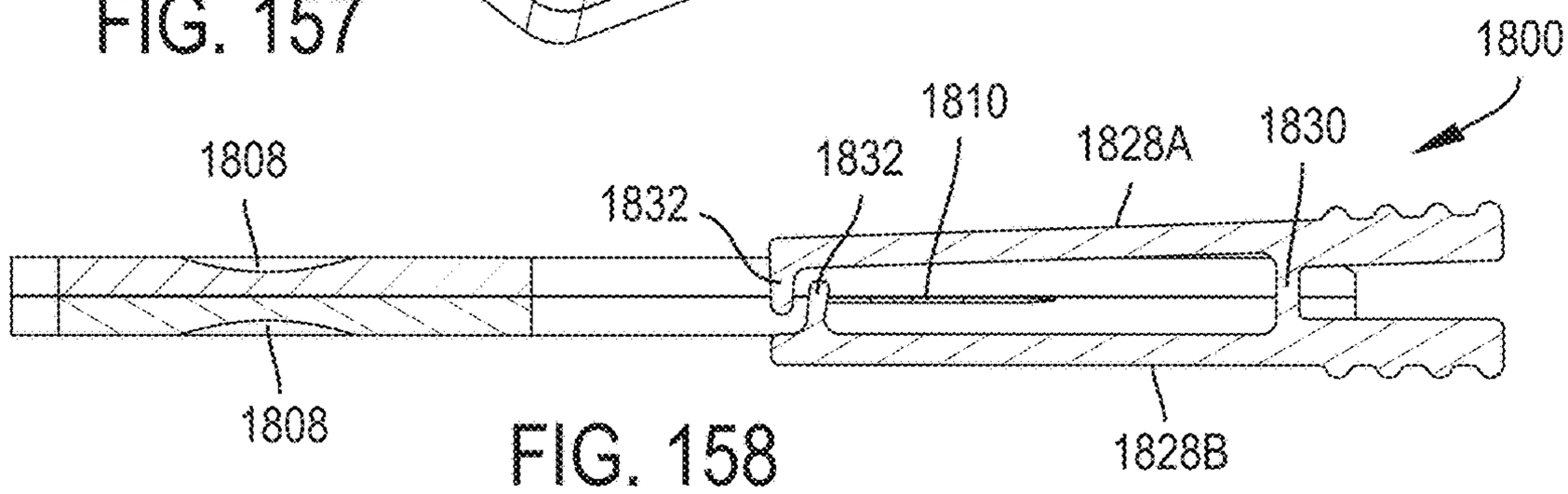

FIG. 158

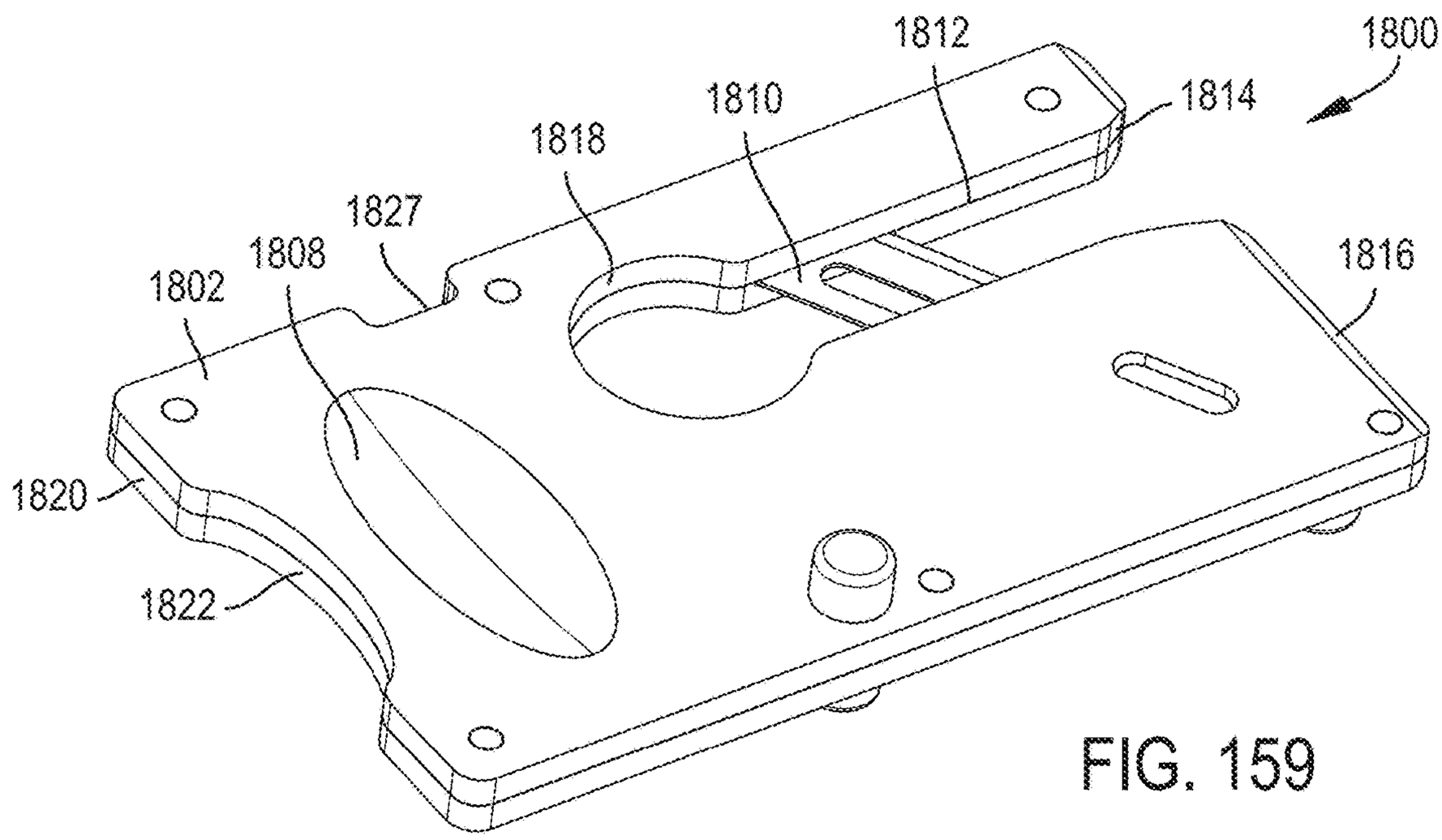

FIG. 159

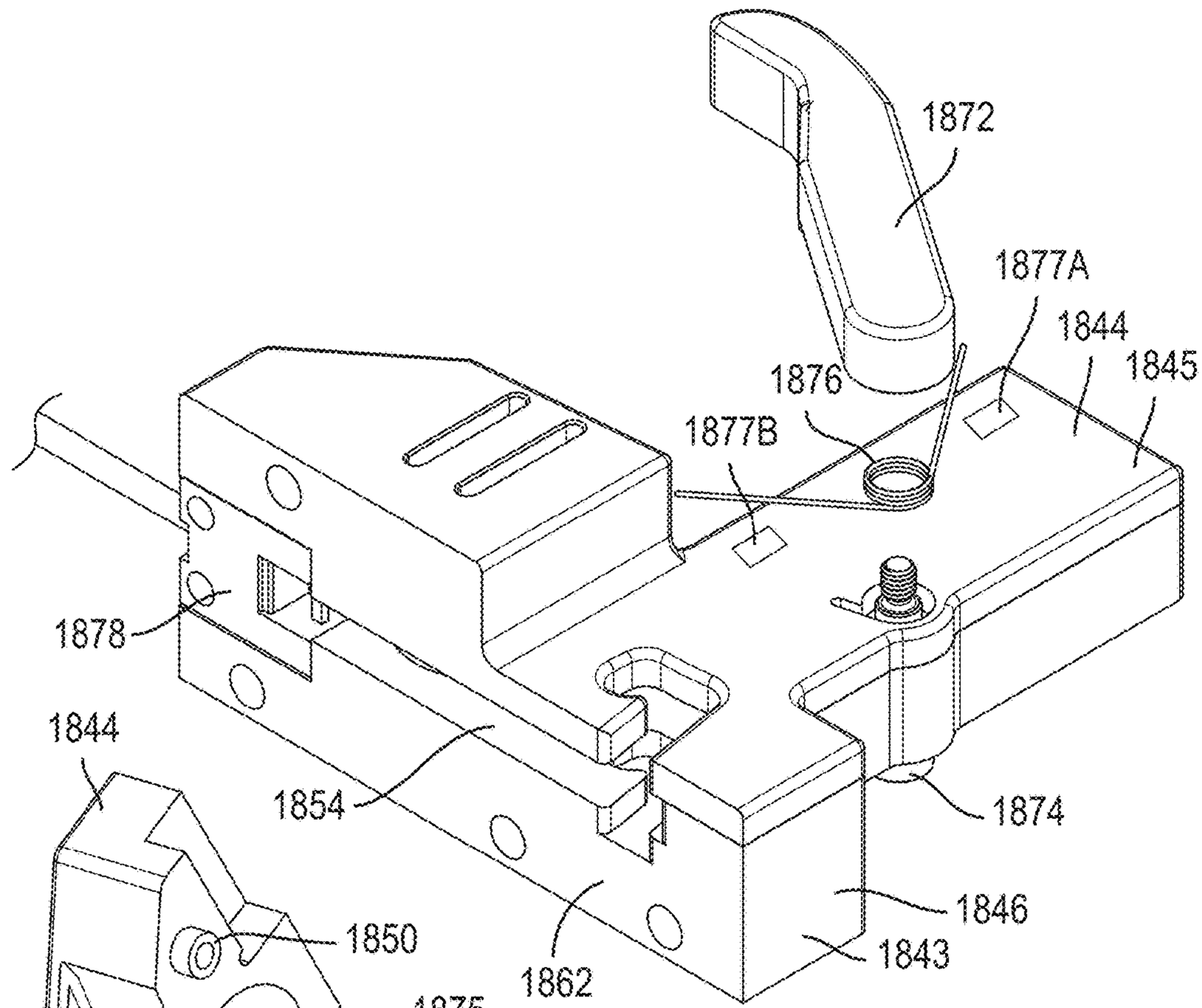

FIG. 160

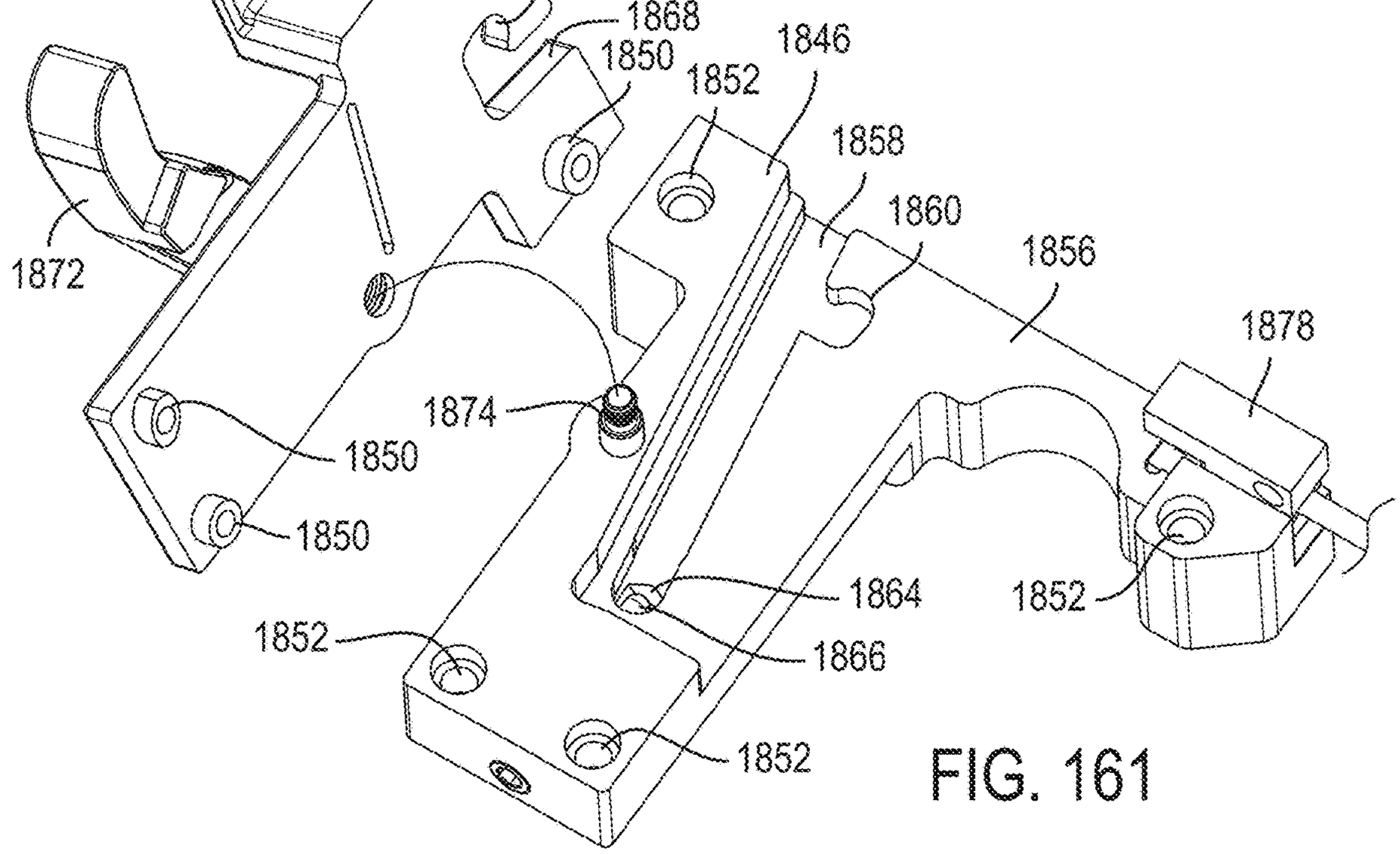

FIG. 161

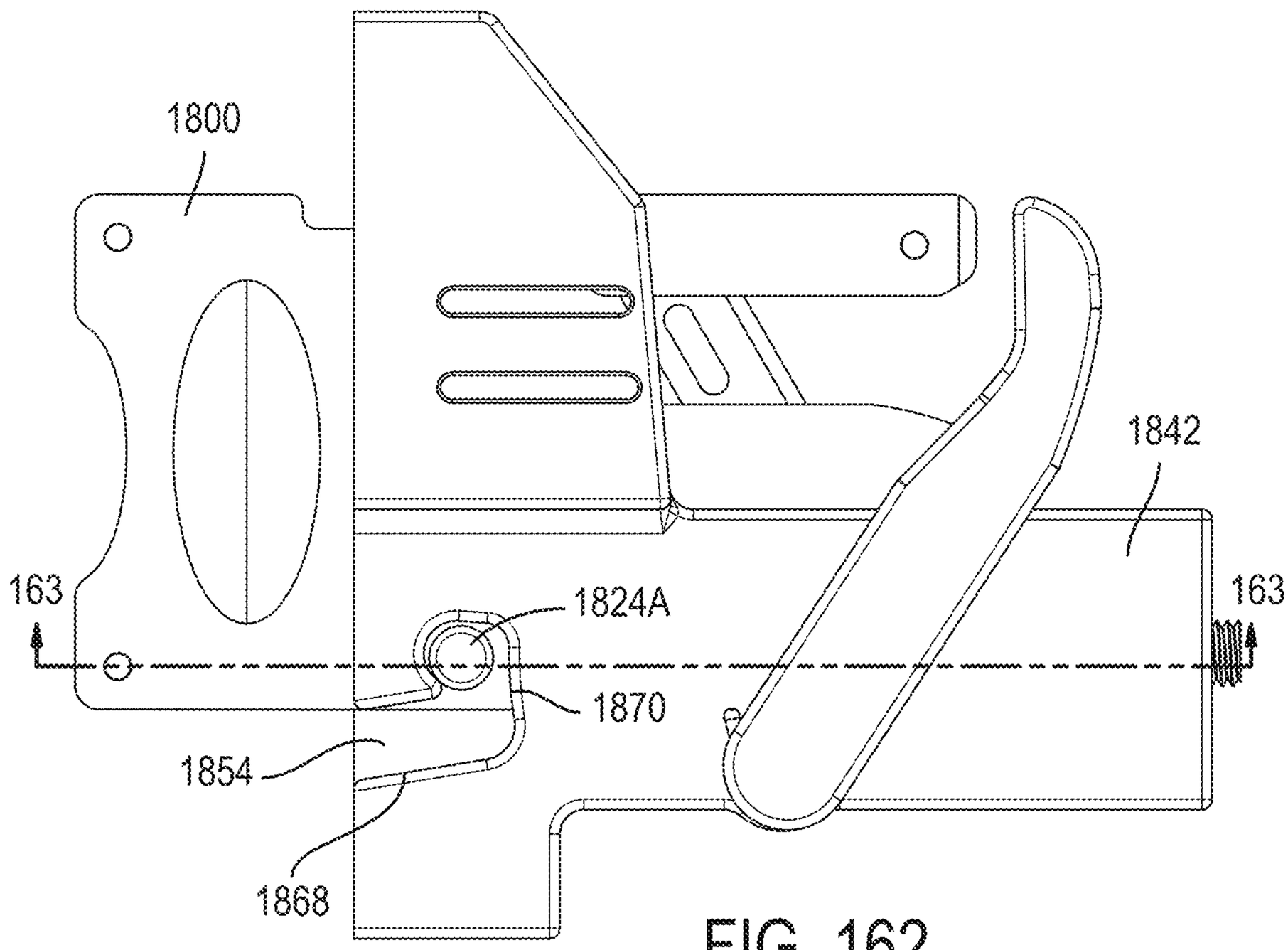

FIG. 162

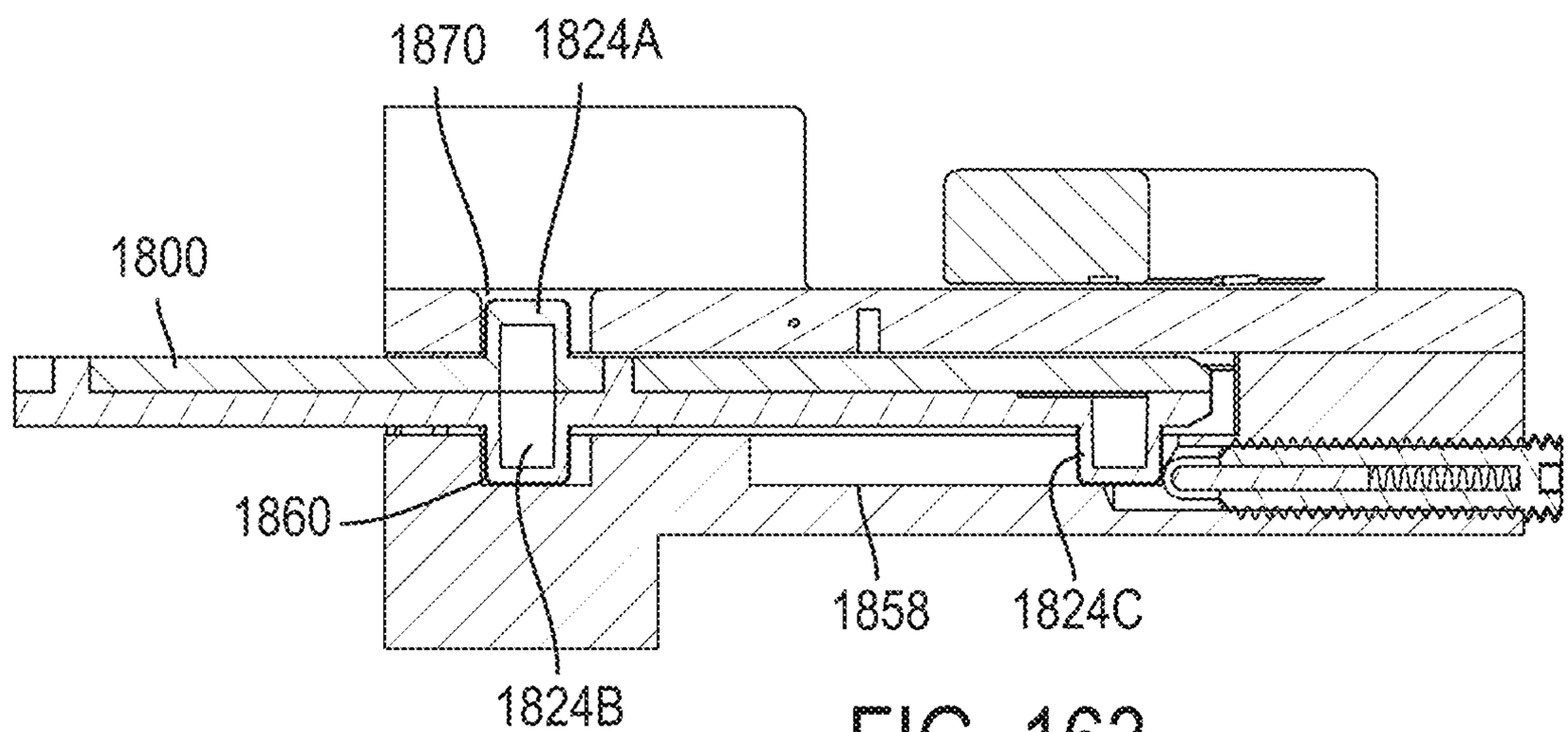

FIG. 163

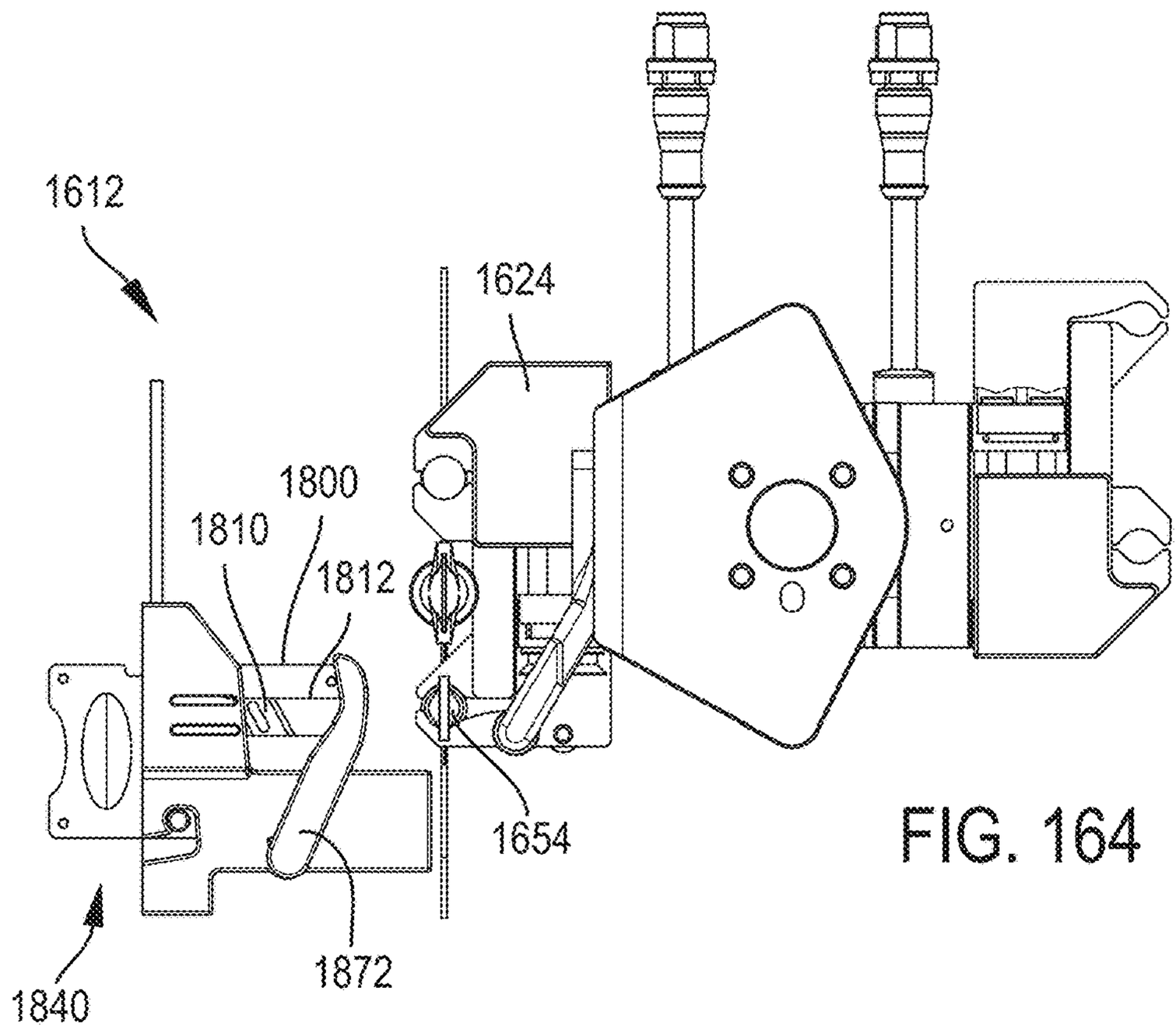

FIG. 164

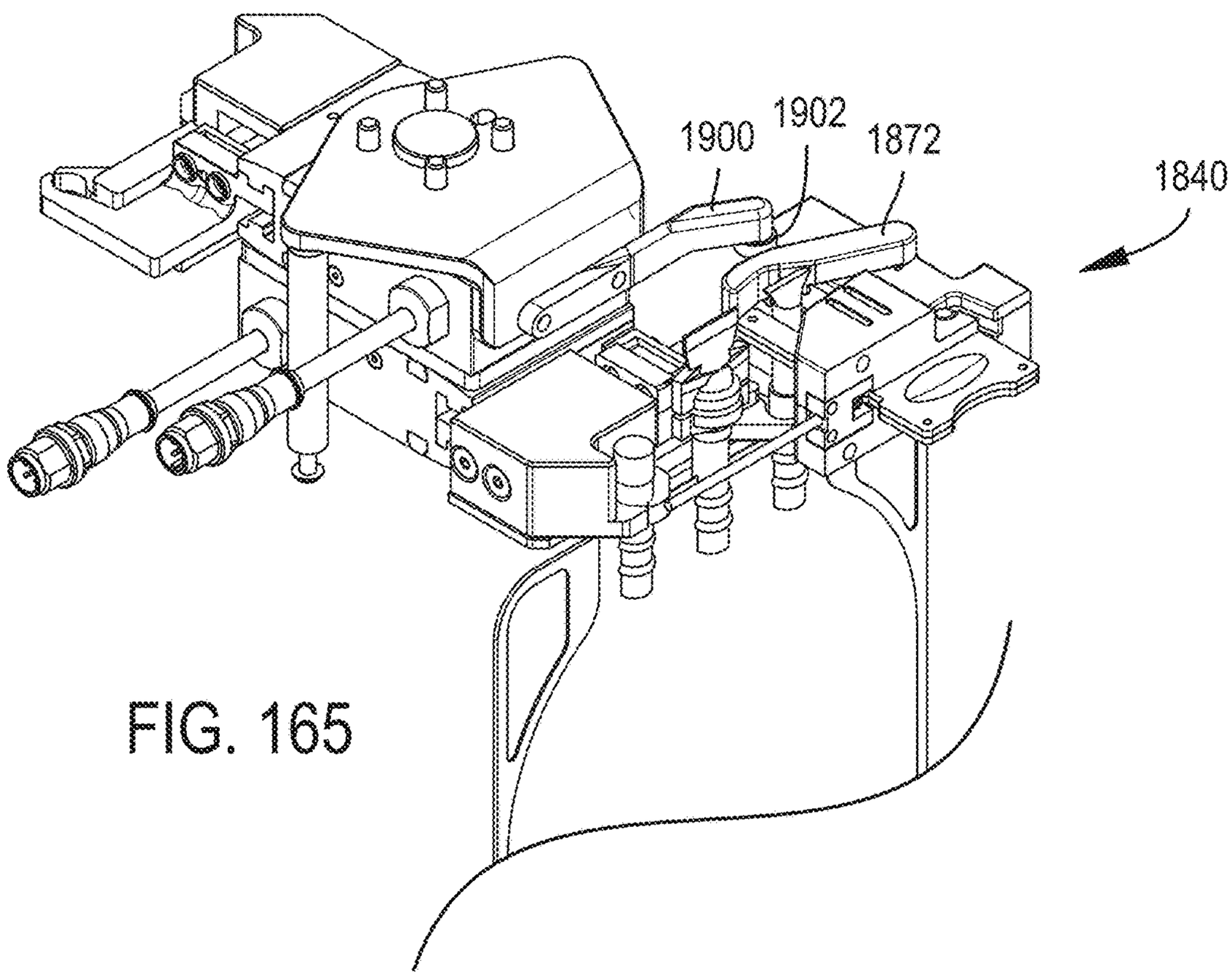

FIG. 165

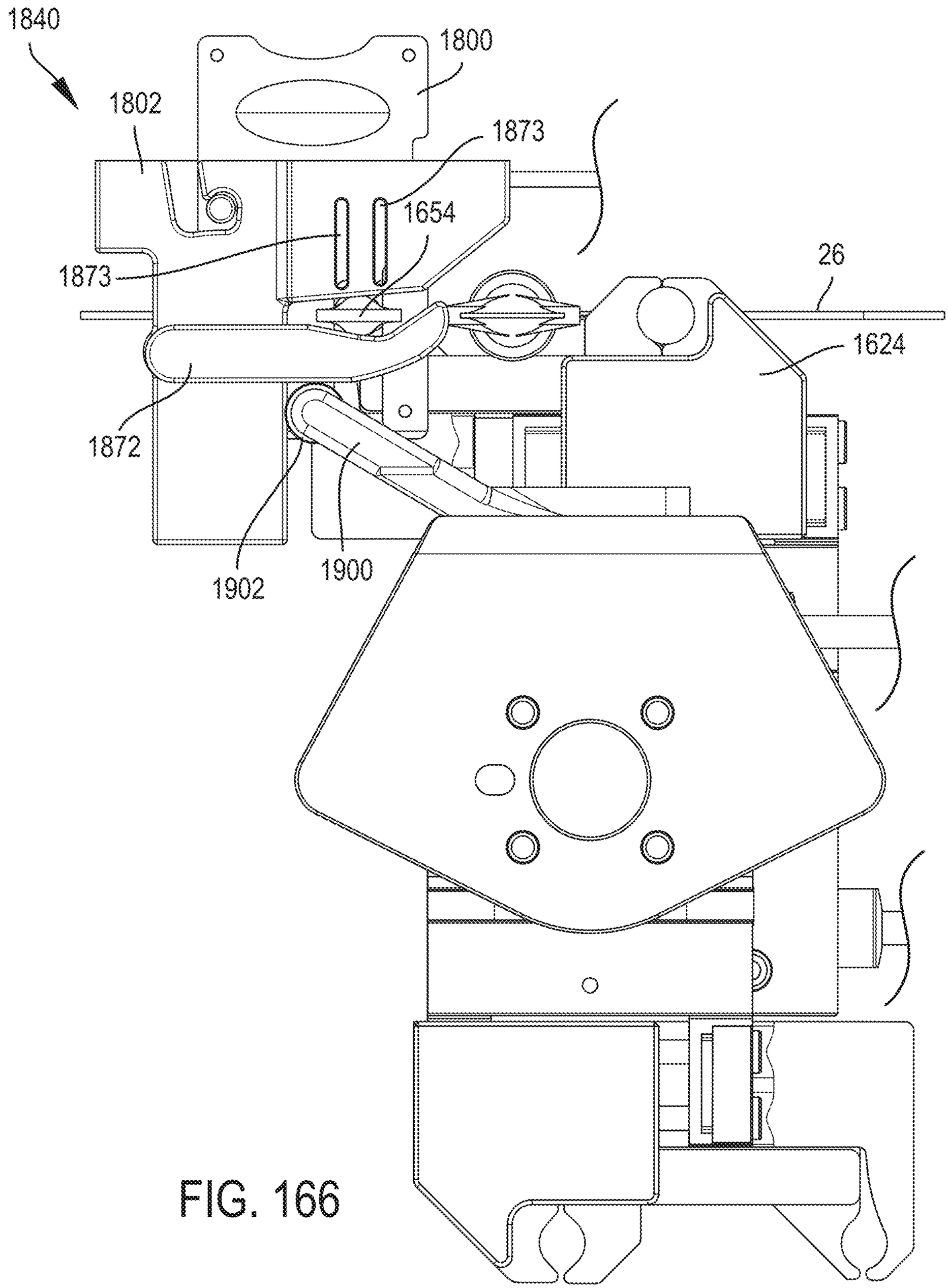

FIG. 166

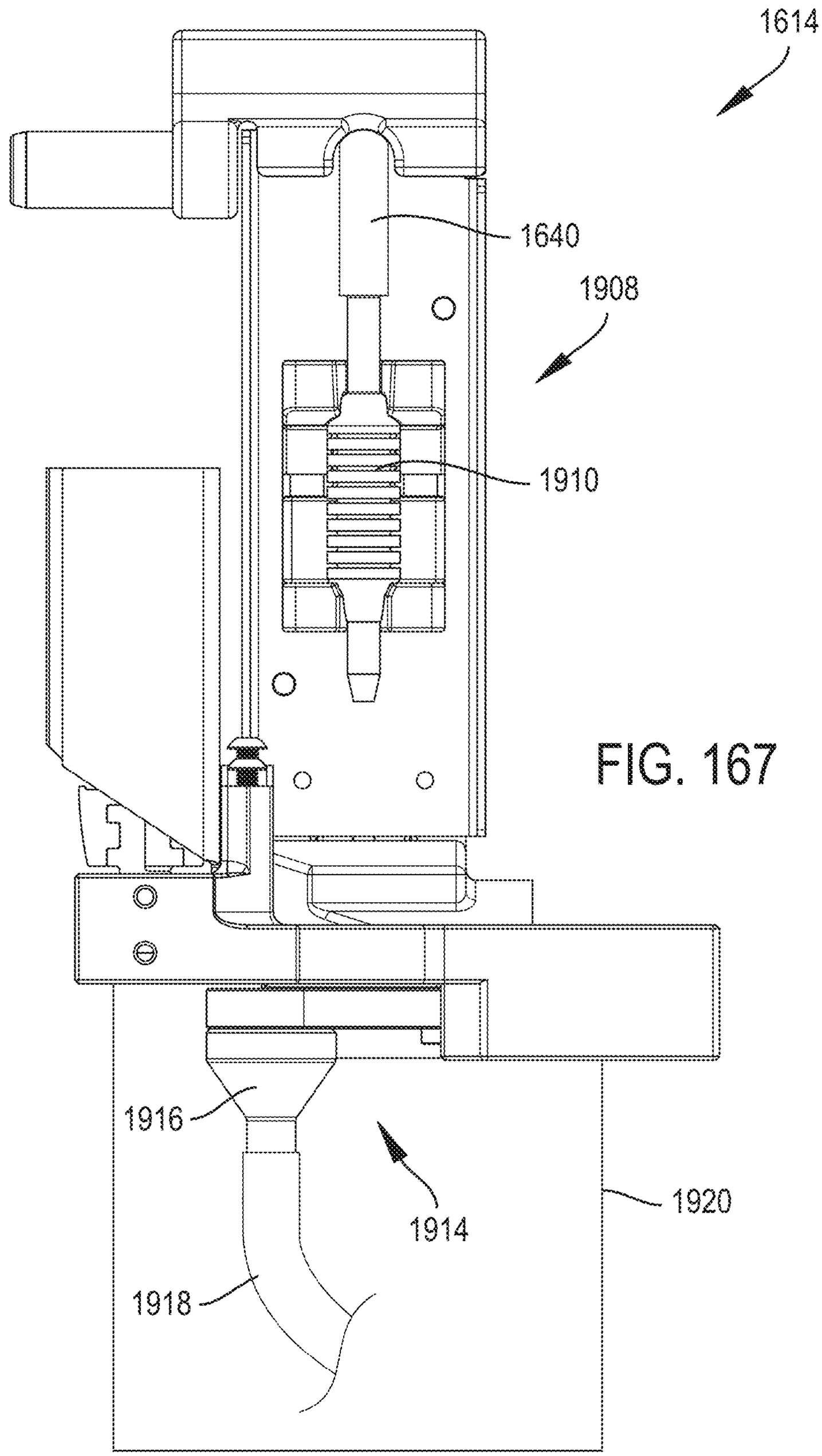

FIG. 167

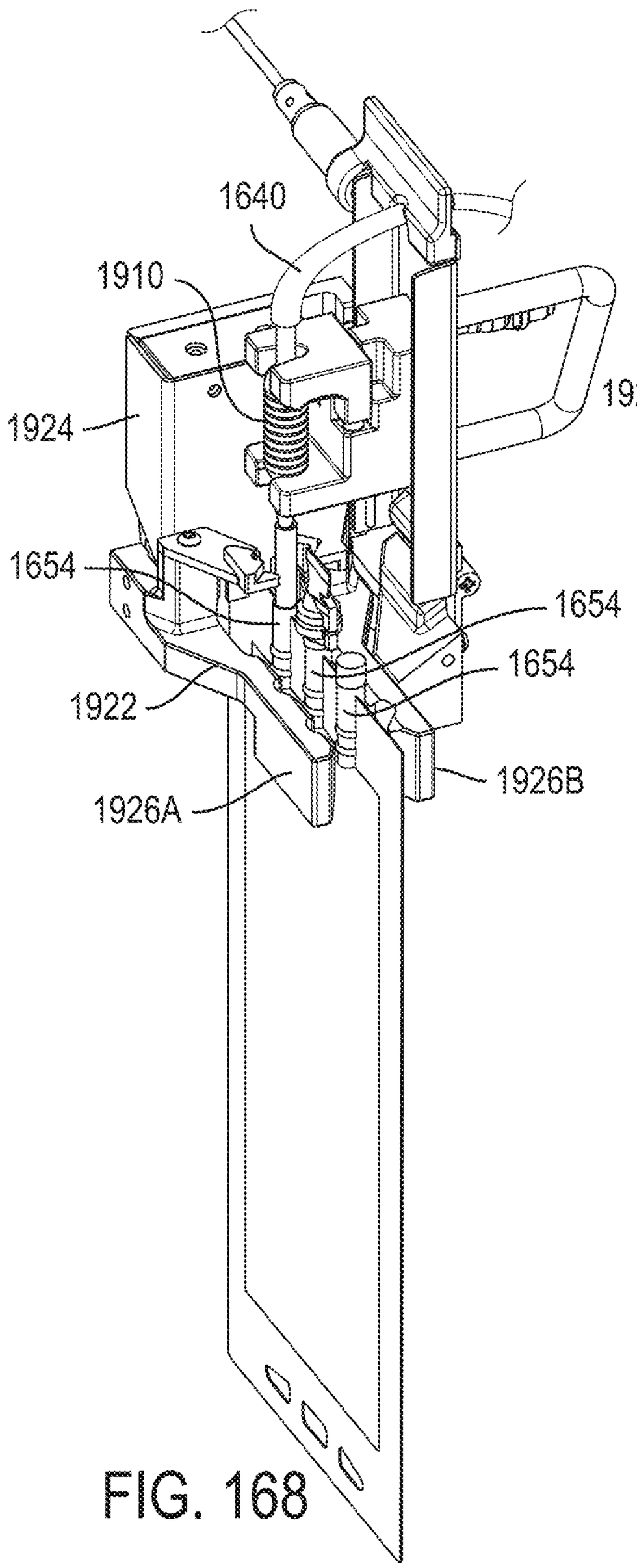

FIG. 168

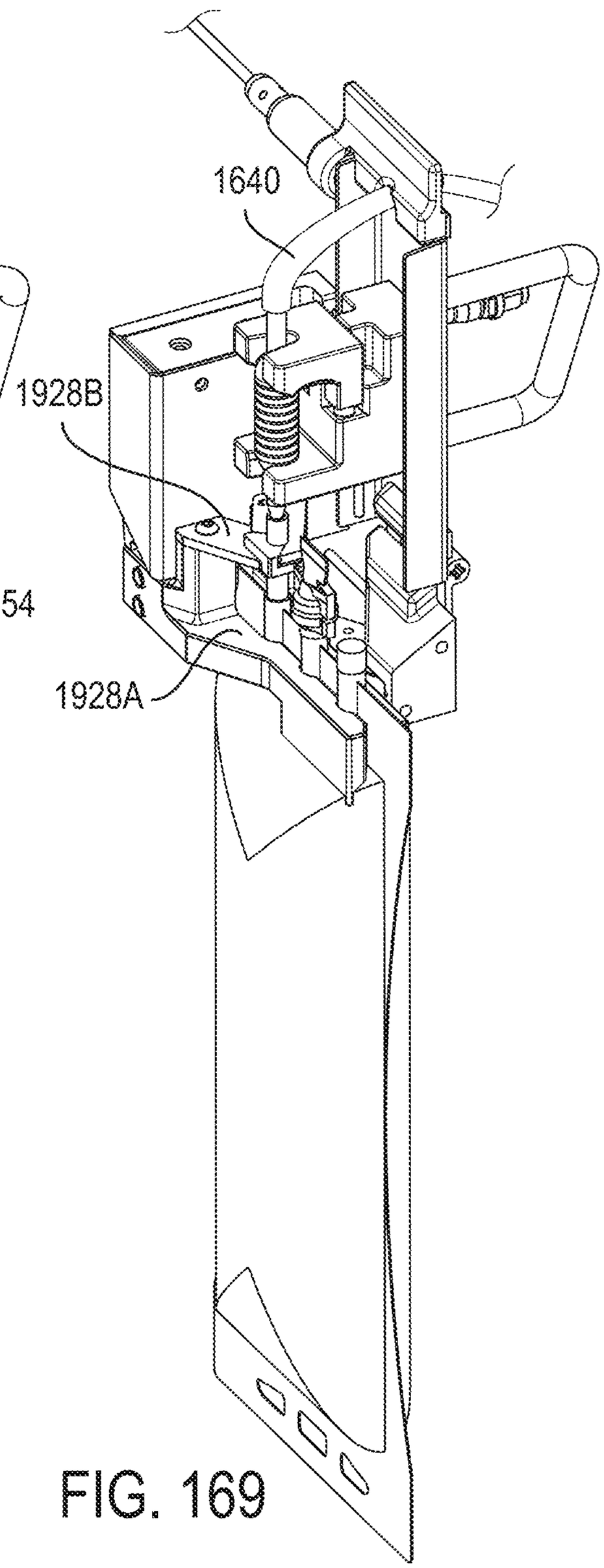

FIG. 169

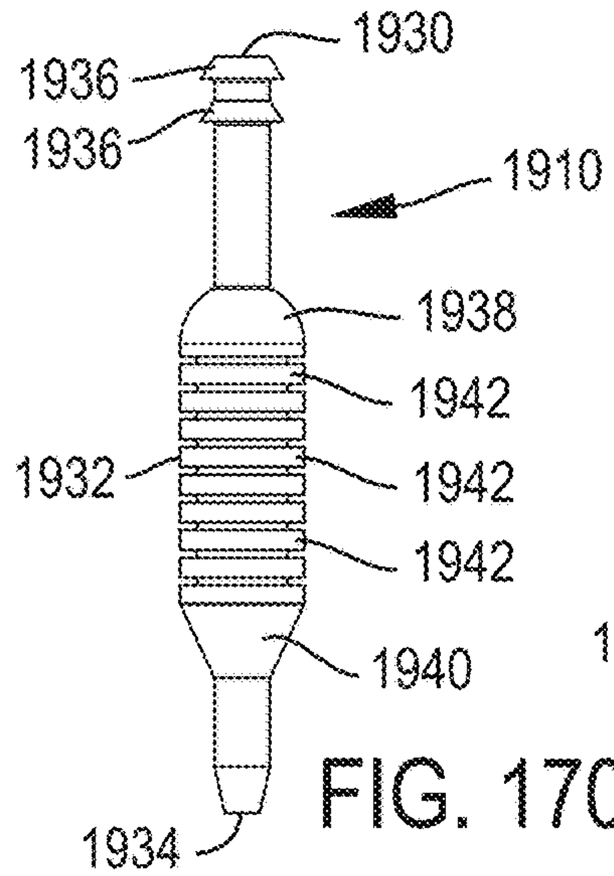

FIG. 170

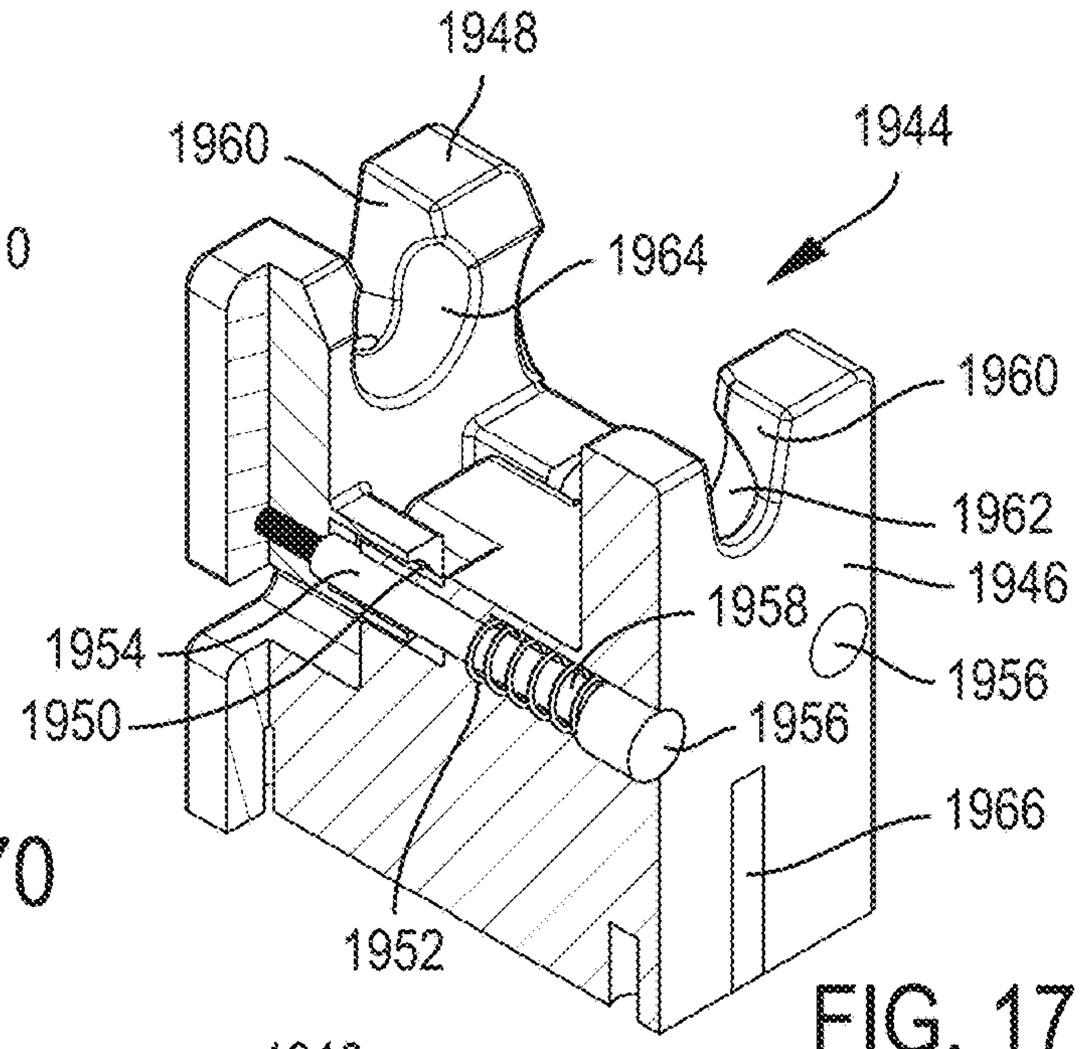

FIG. 171

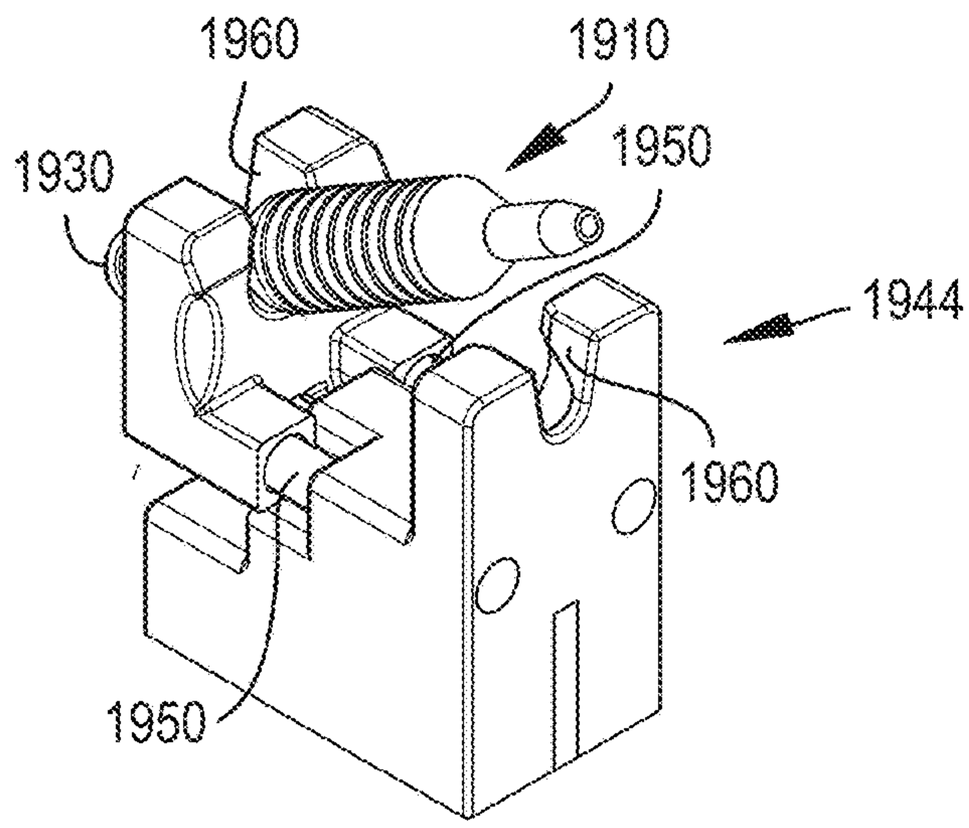

FIG. 172A

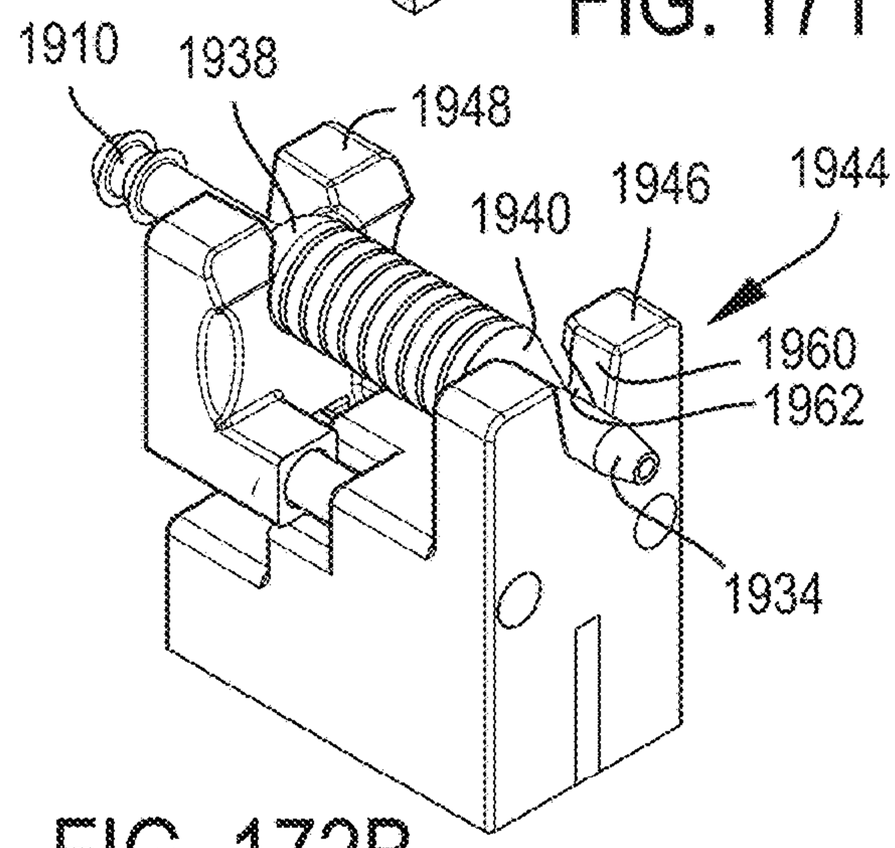

FIG. 172B

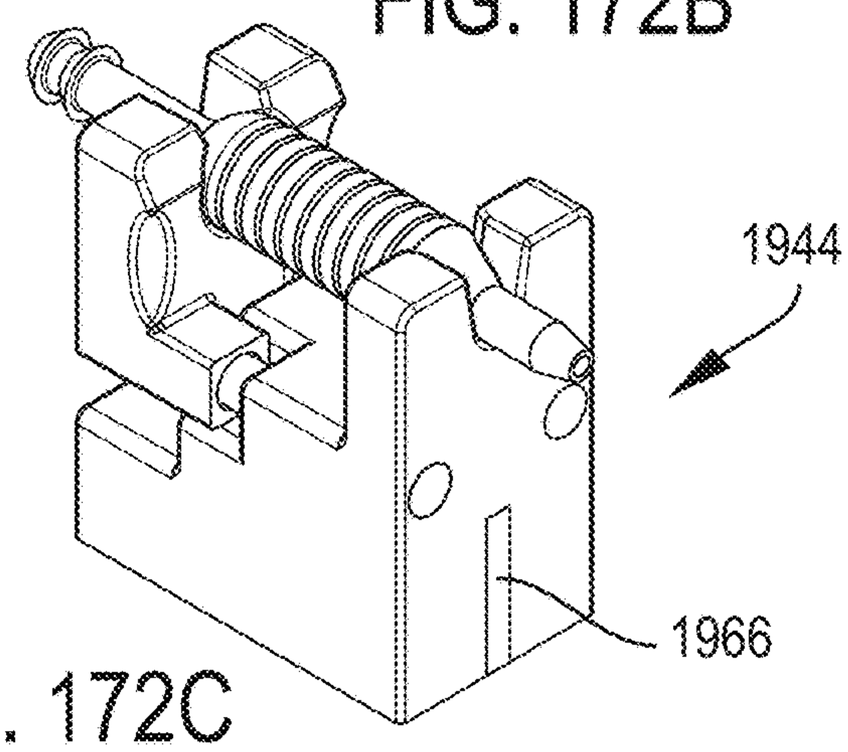

FIG. 172C

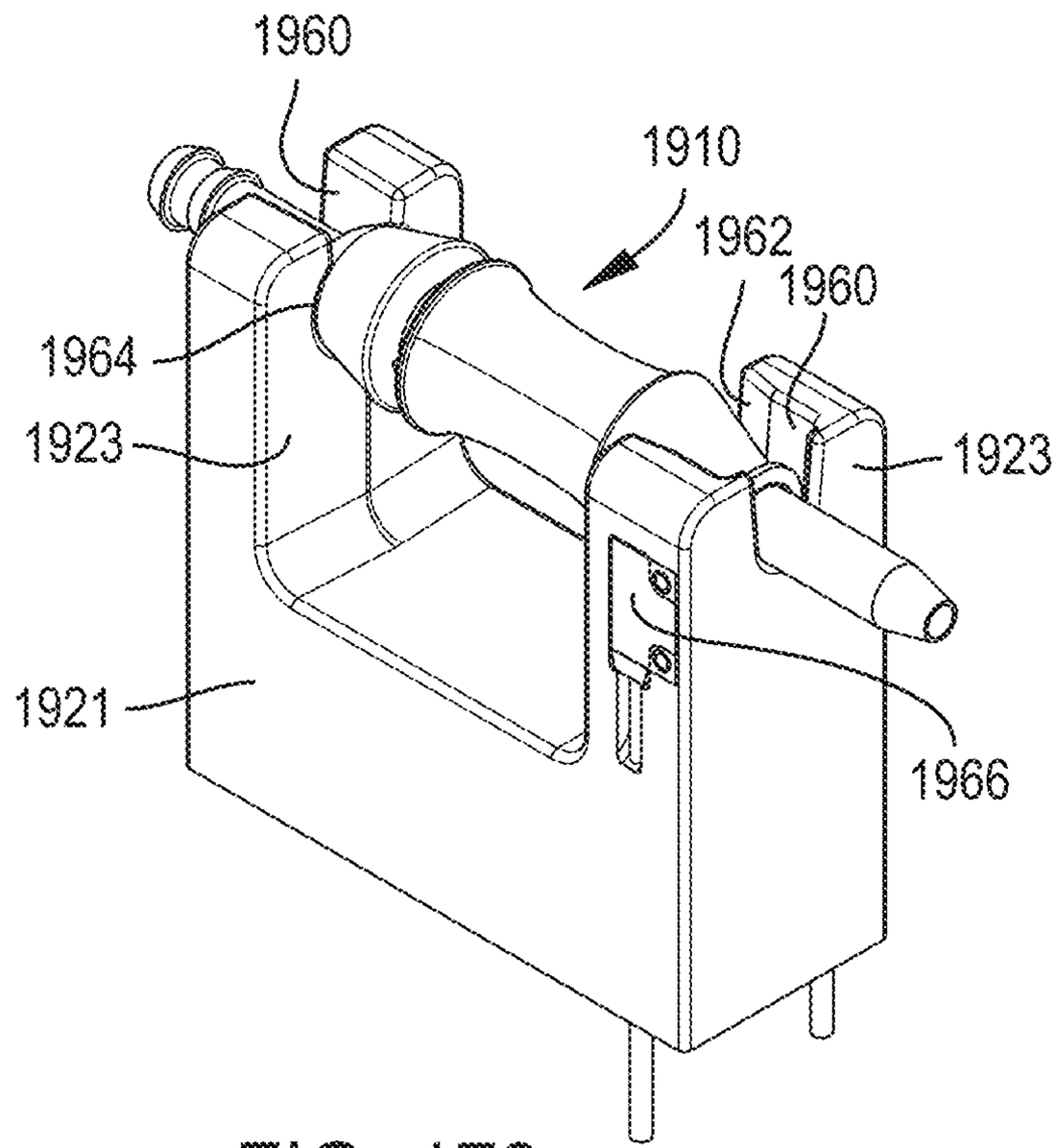

FIG. 173

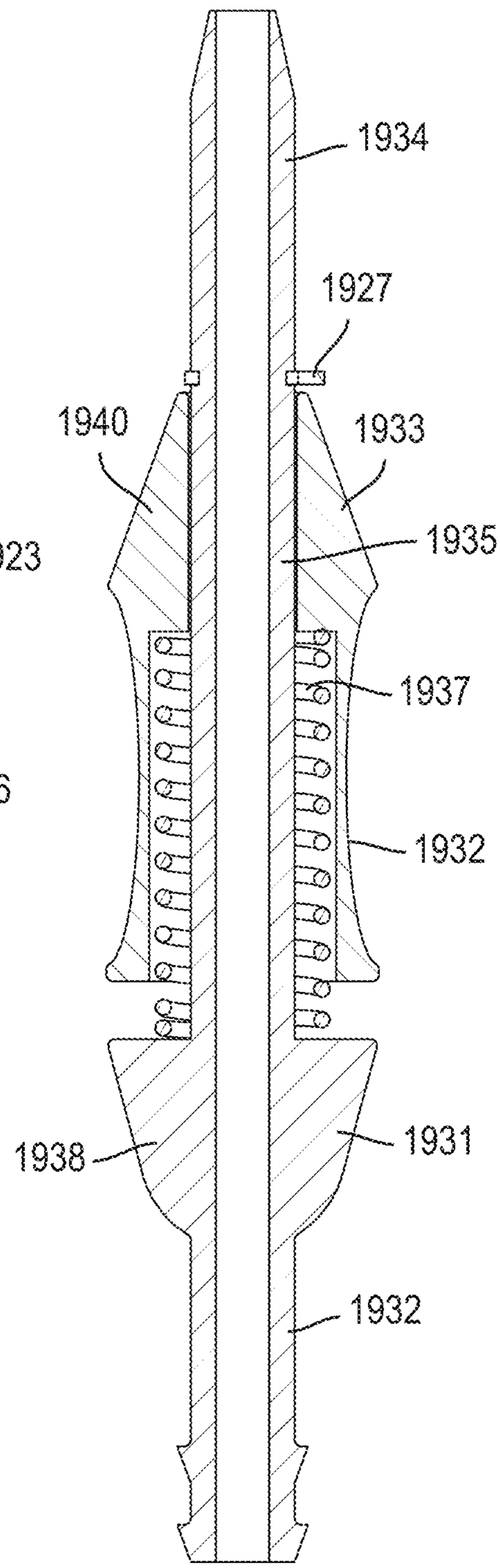

FIG. 174

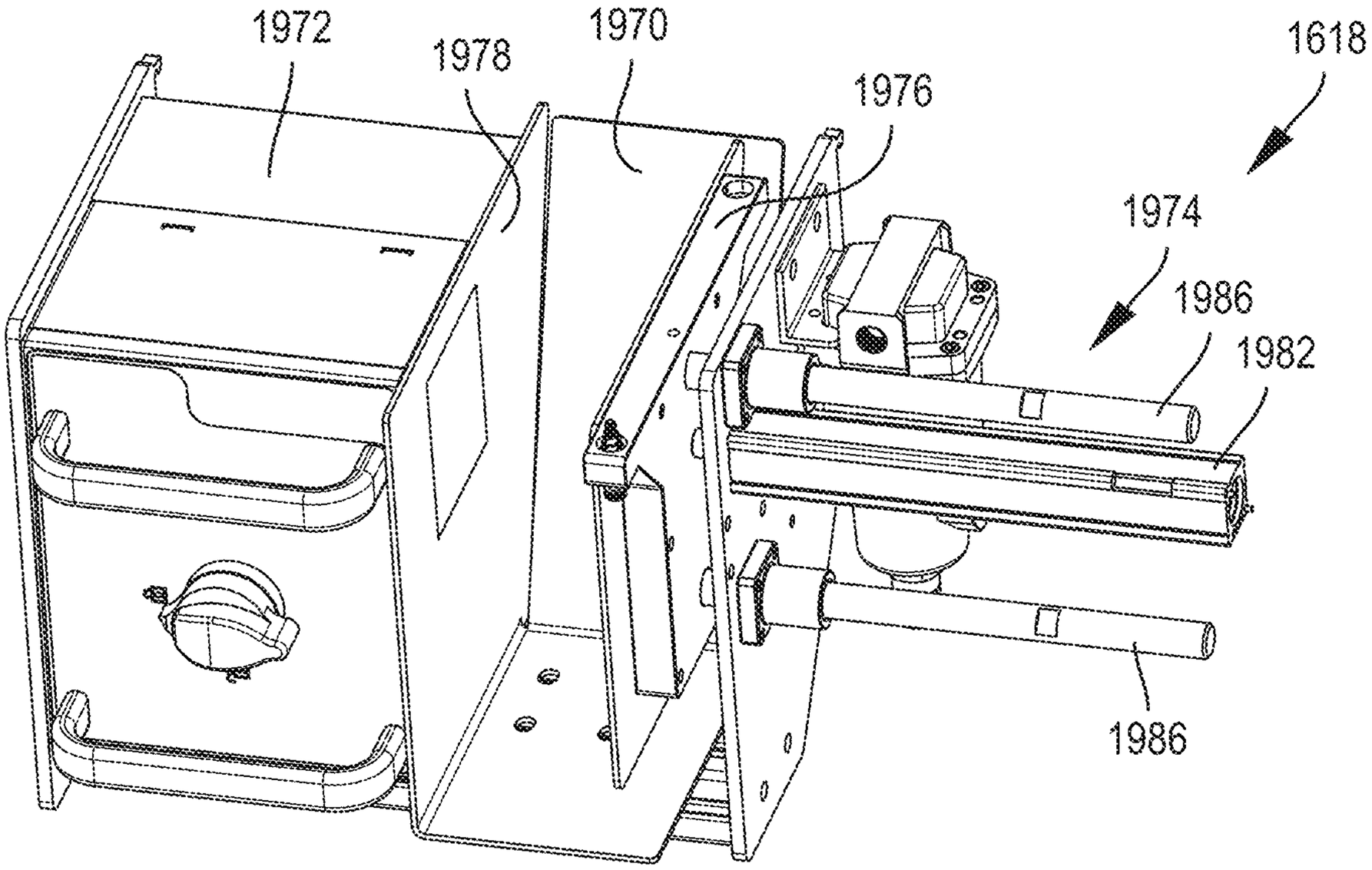

FIG. 175

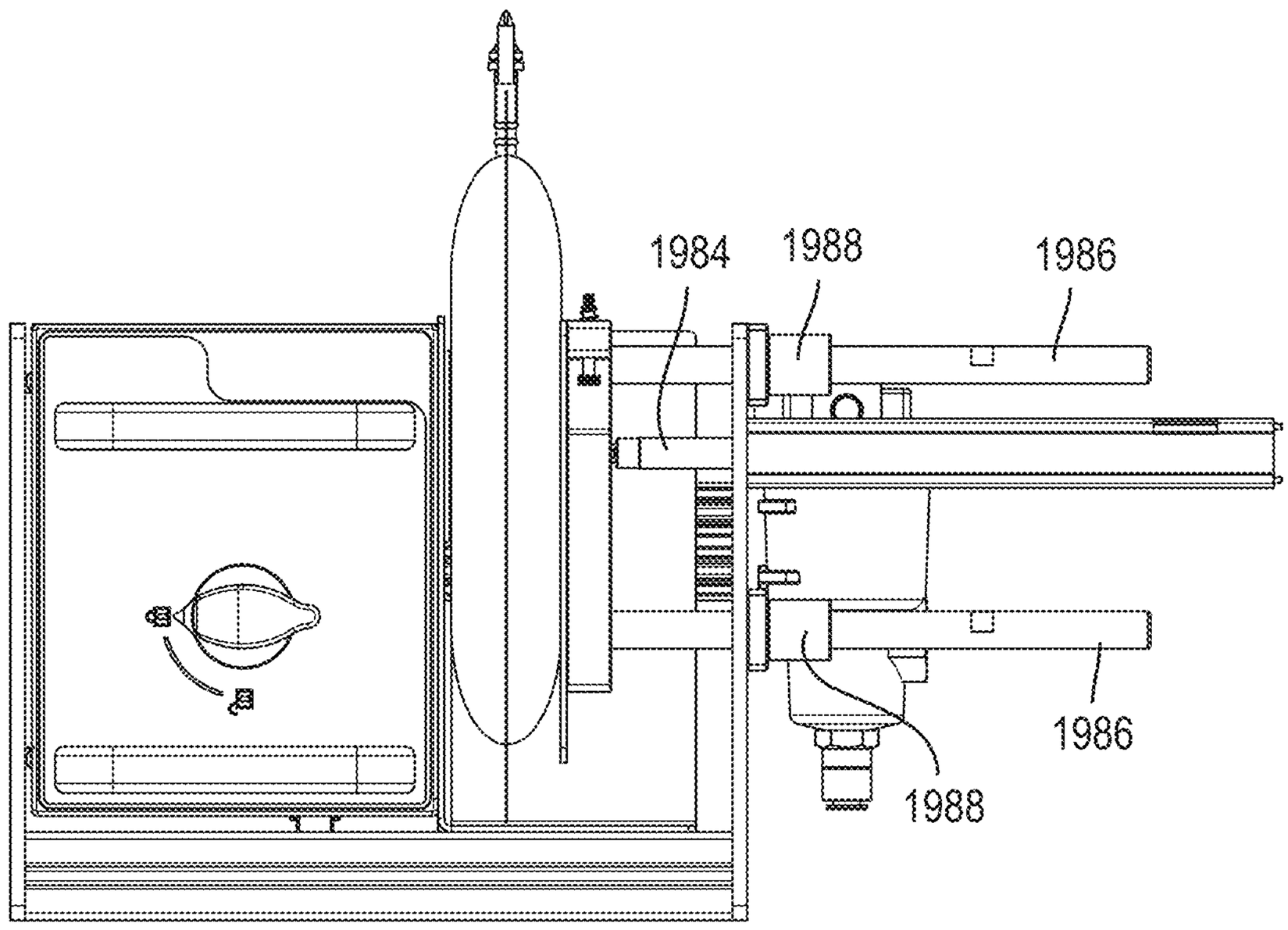

FIG. 176

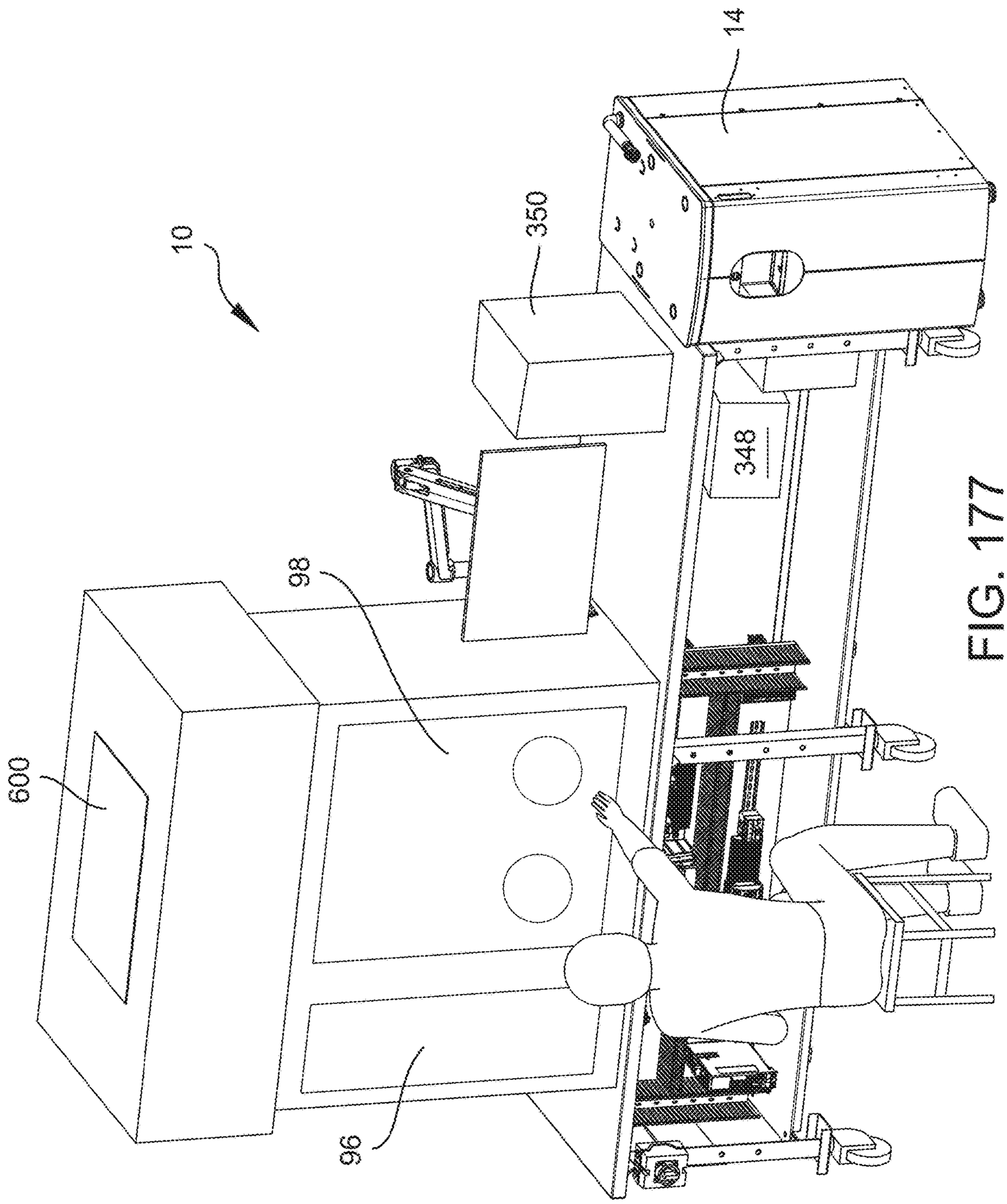

FIG. 177

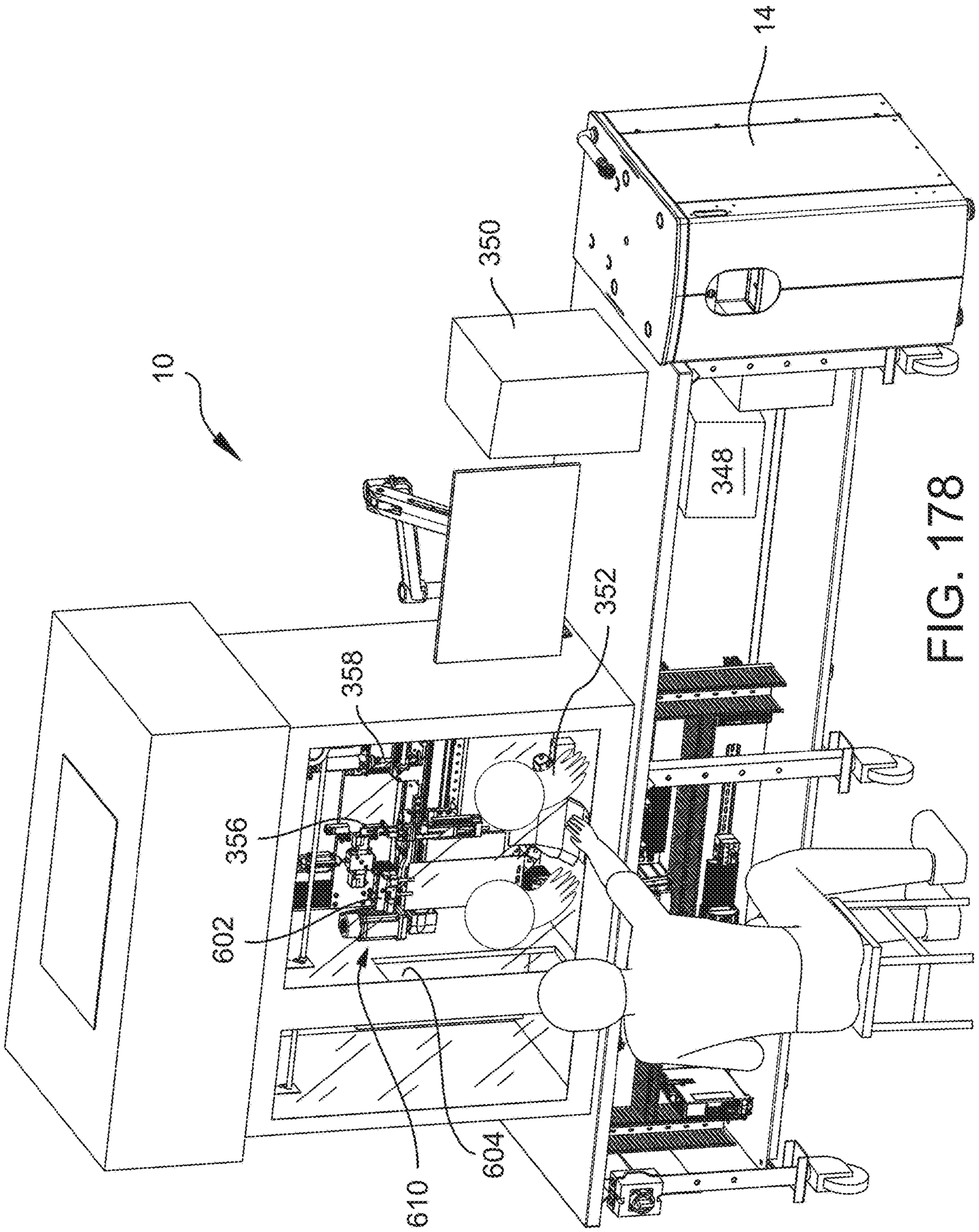

FIG. 178

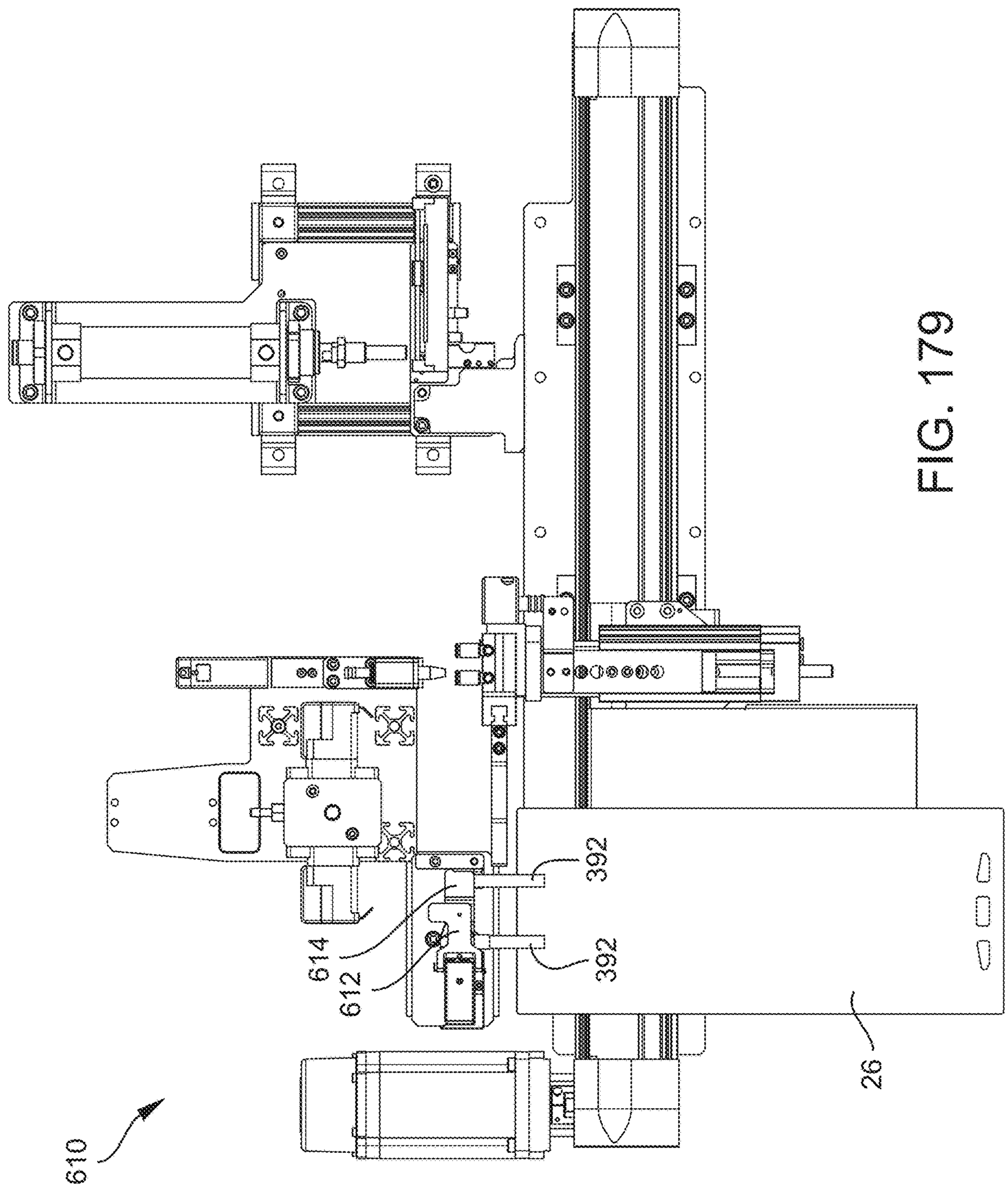

FIG. 179

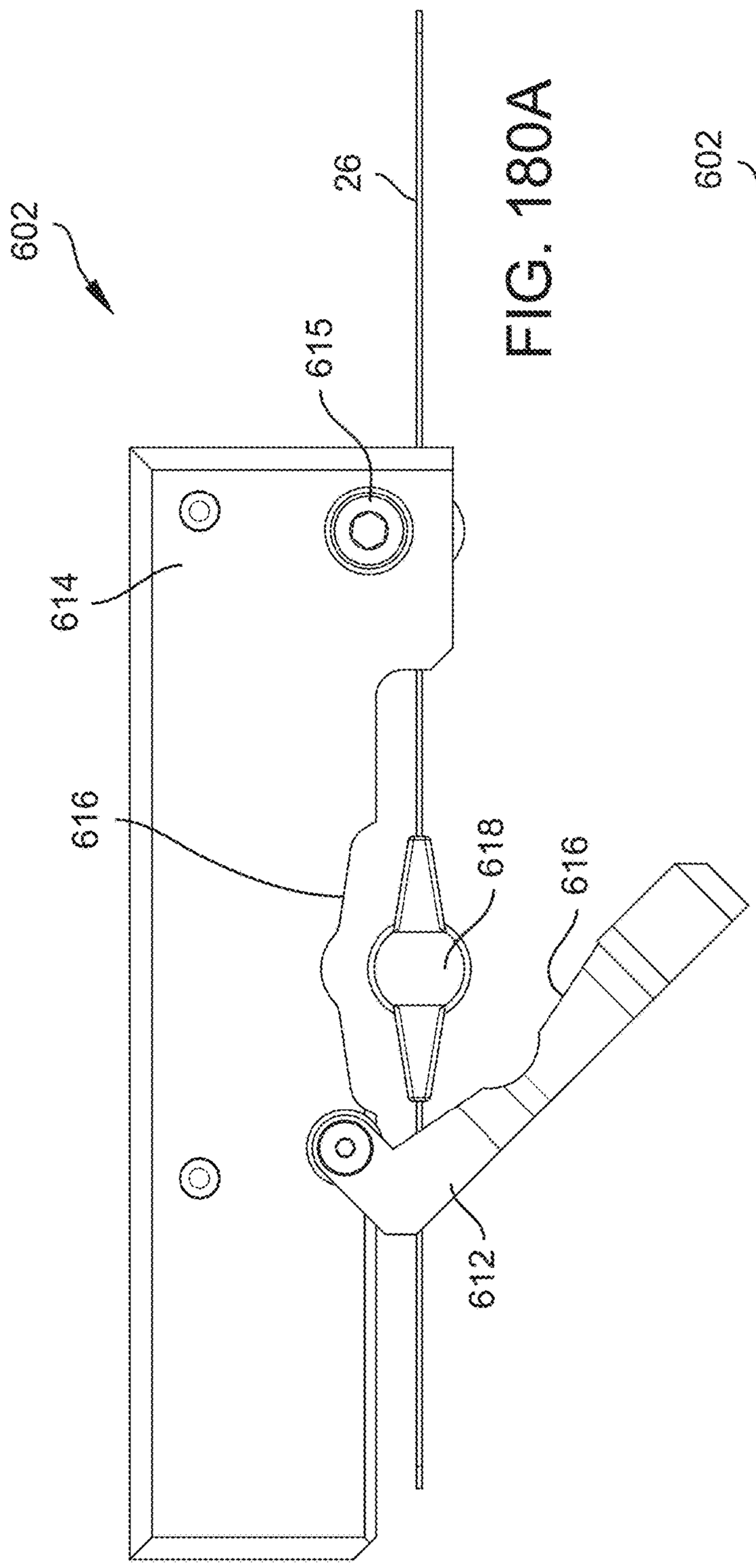

FIG. 180A

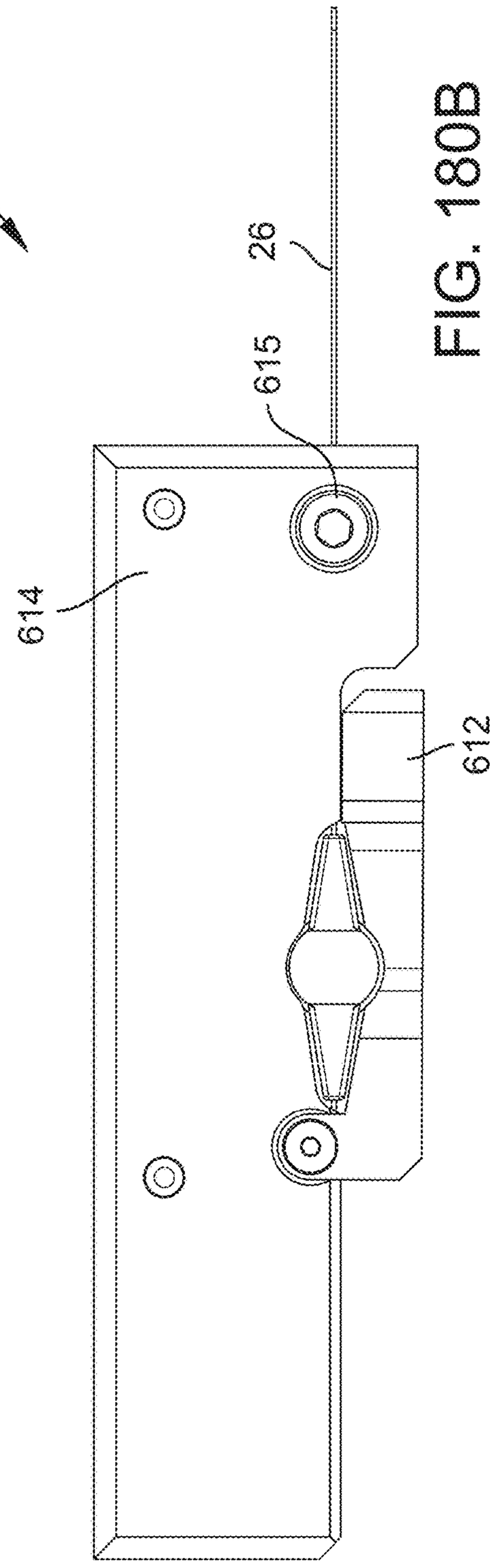

FIG. 180B

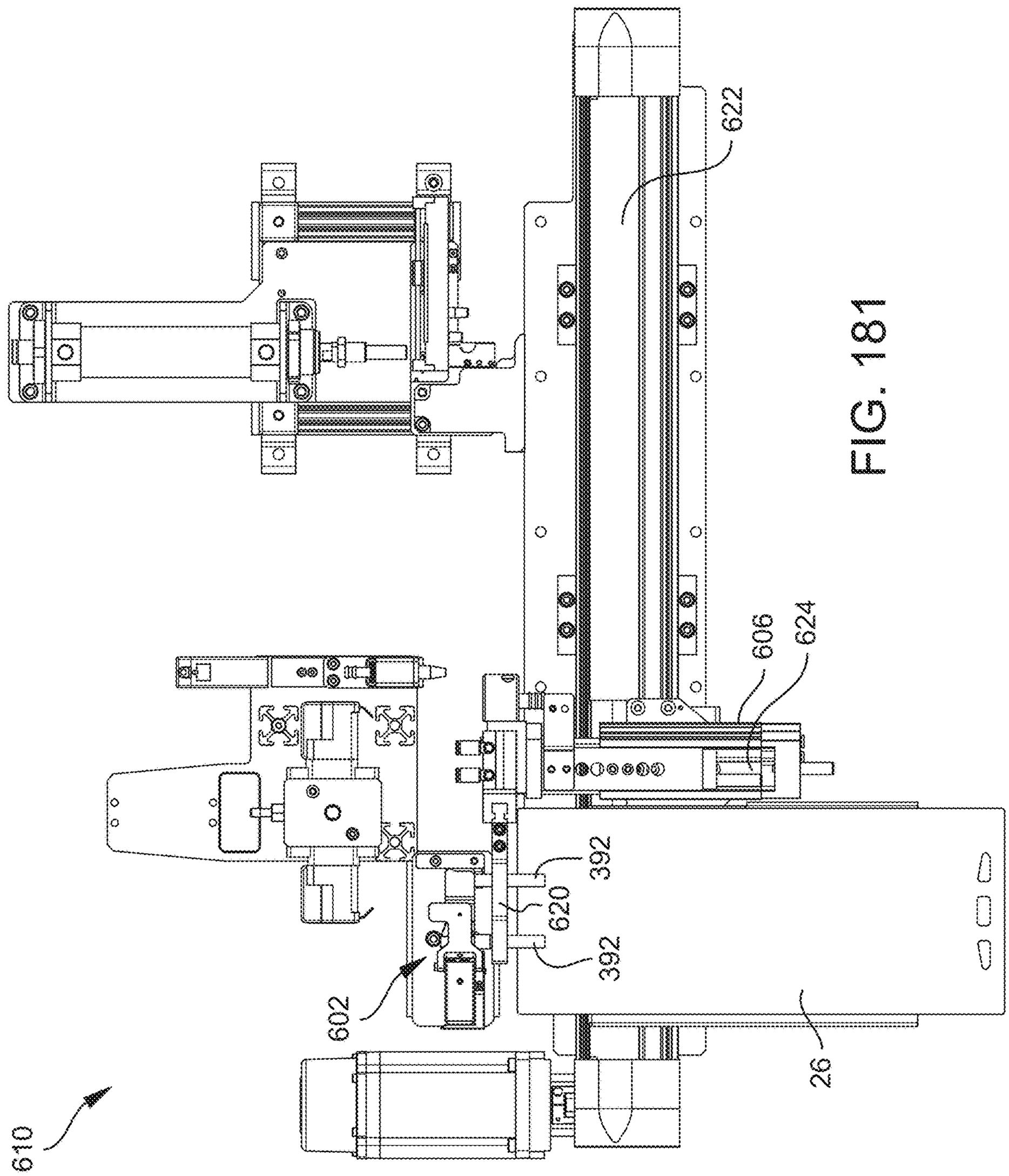

FIG. 181

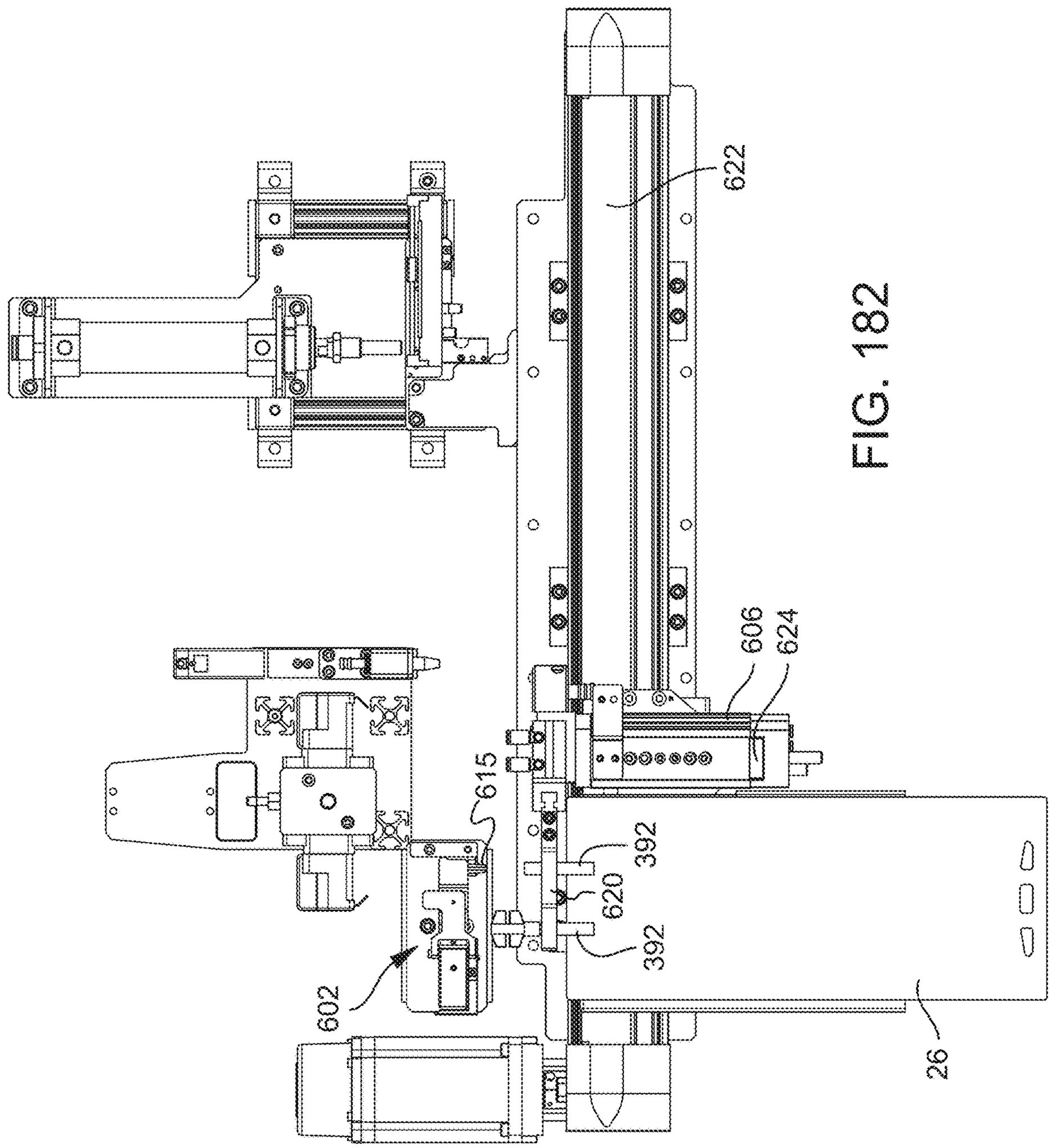

FIG. 182

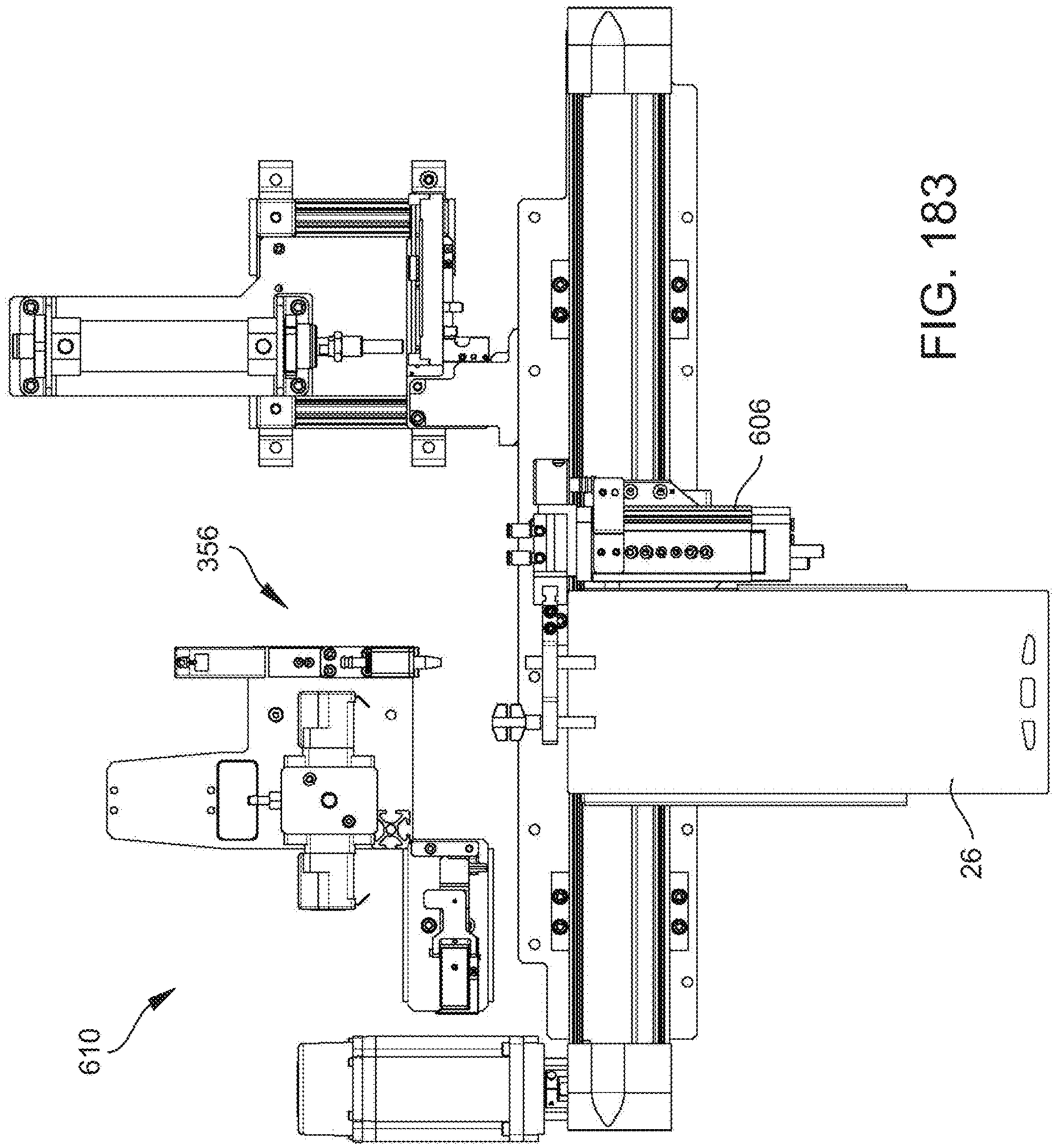

FIG. 183

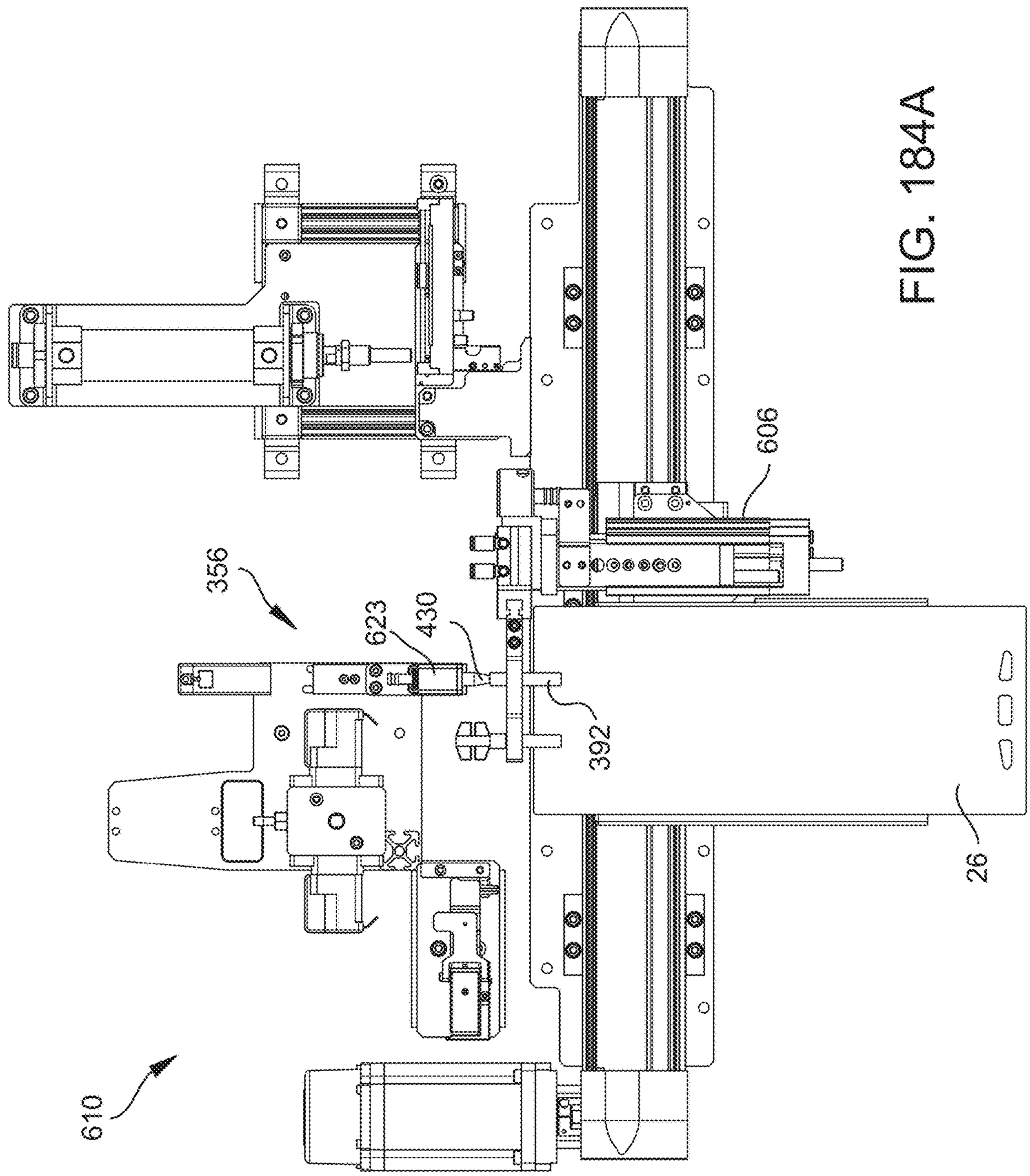

FIG. 184A

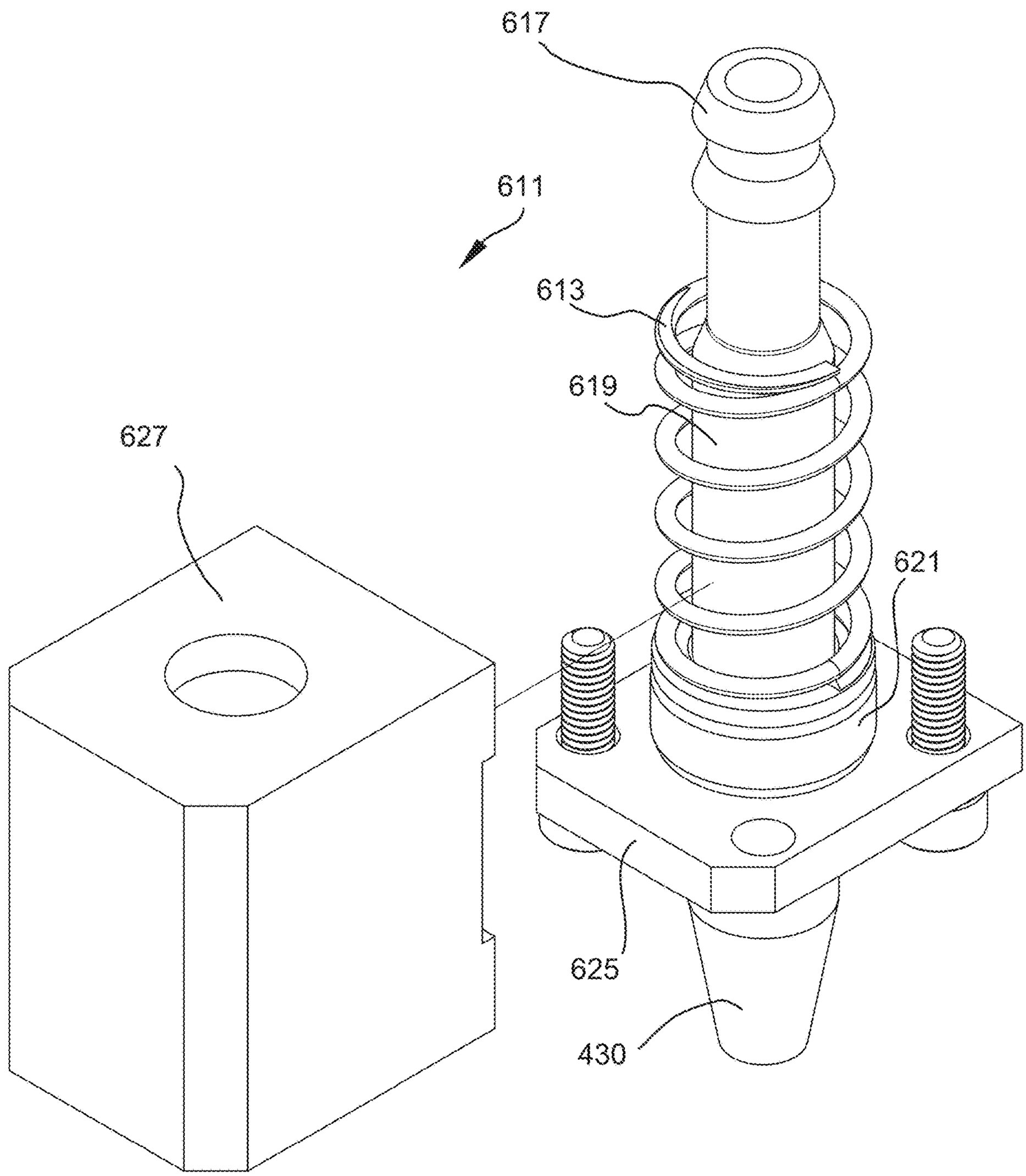

FIG. 184B

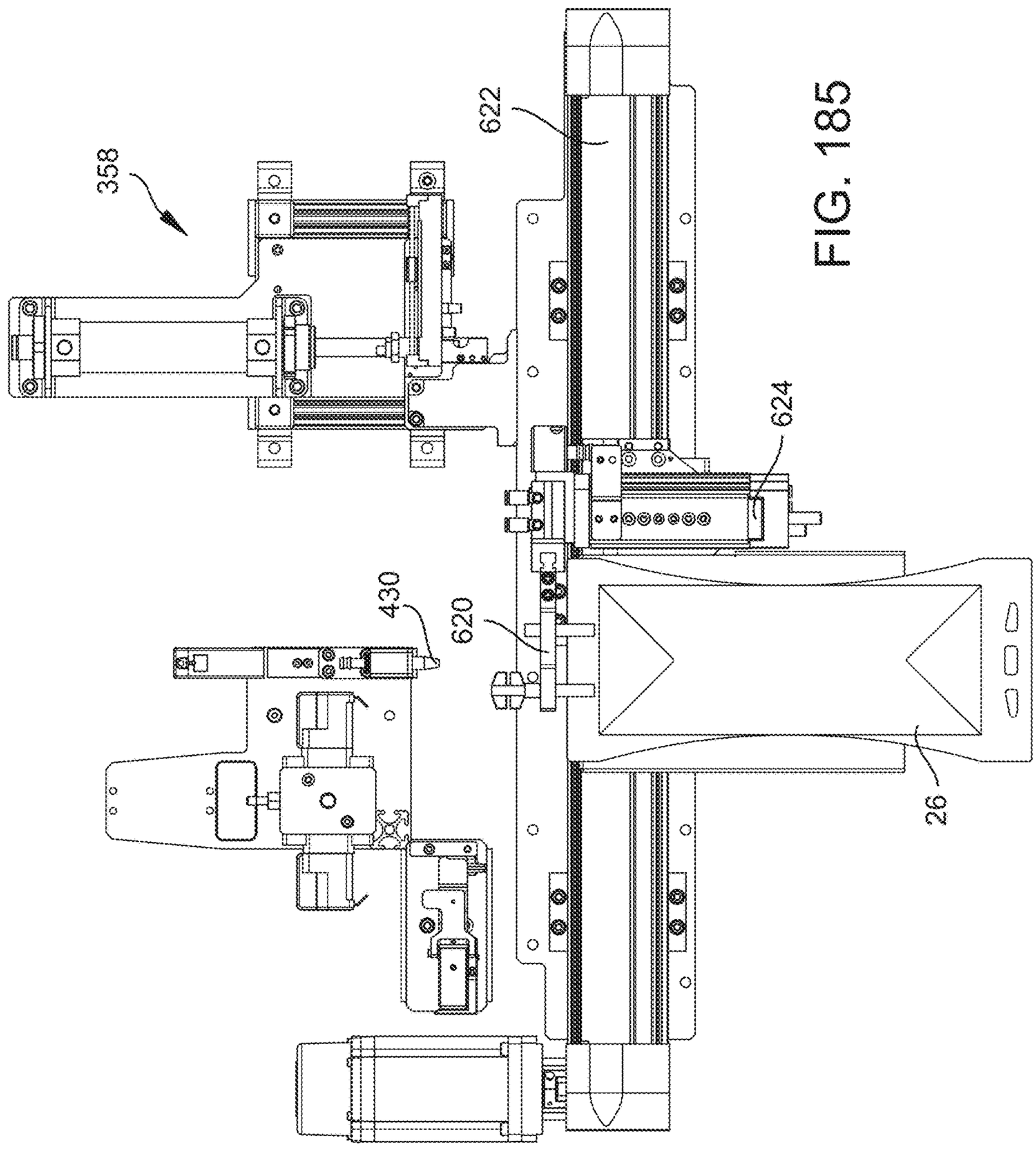

FIG. 185

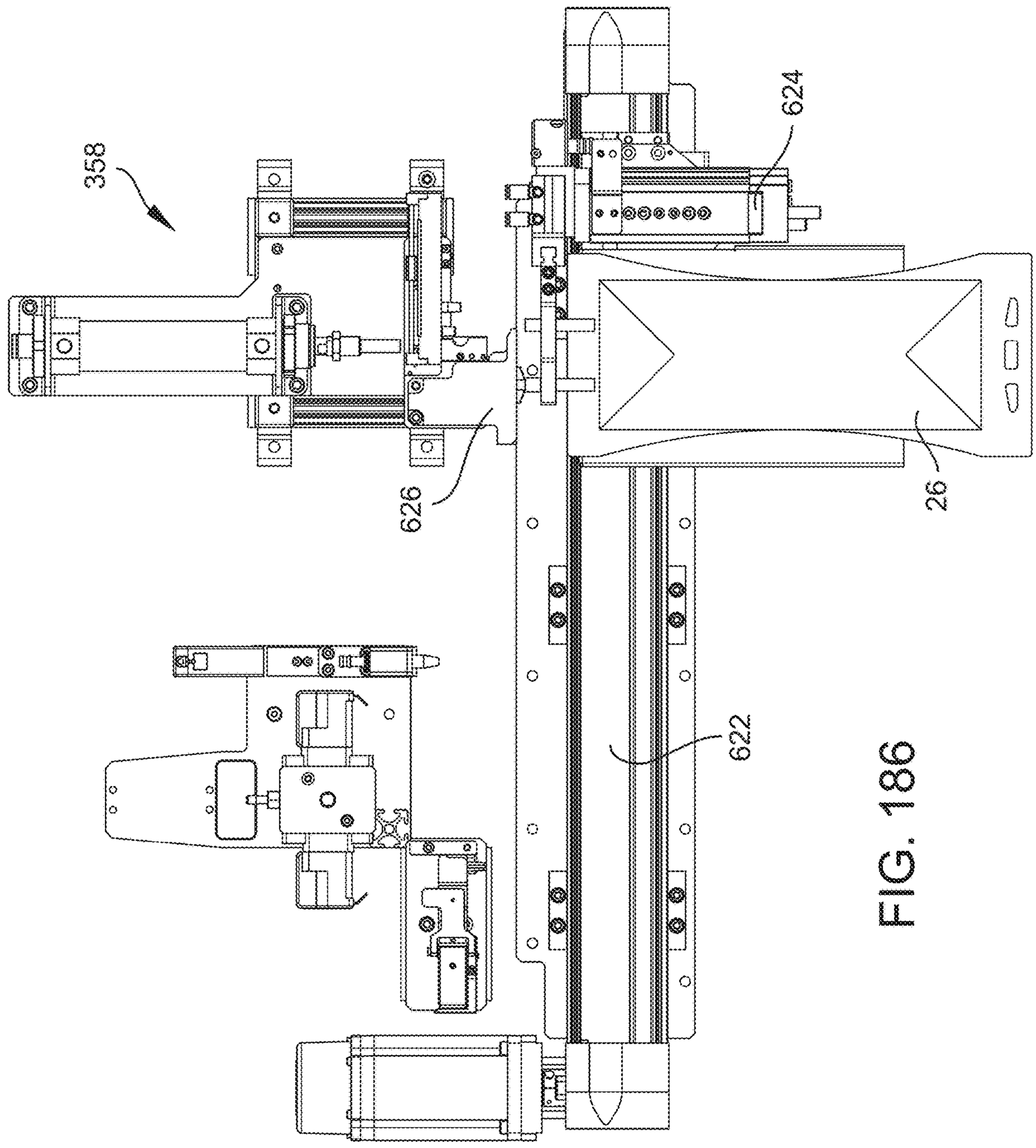

FIG. 186

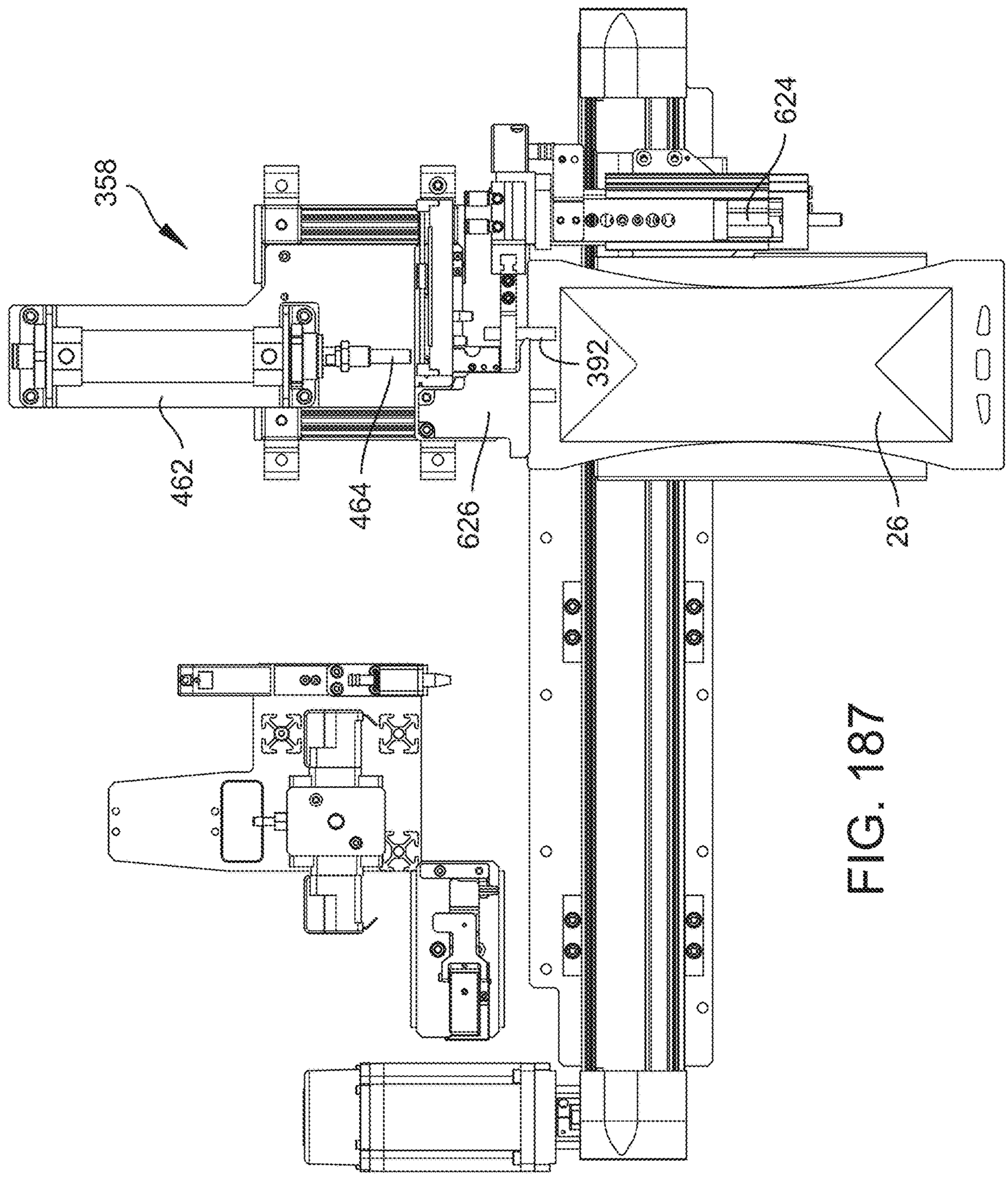

FIG. 187

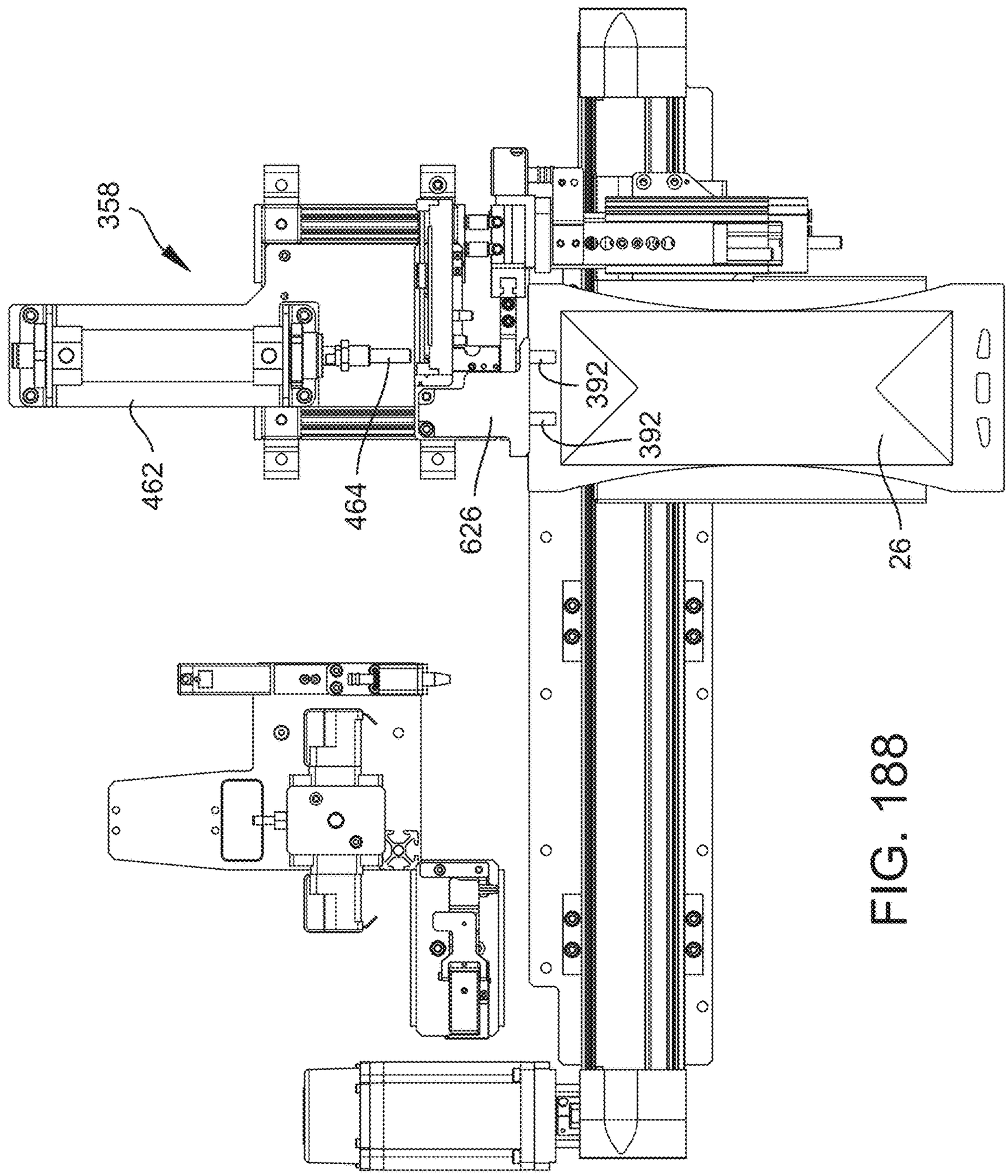

FIG. 188

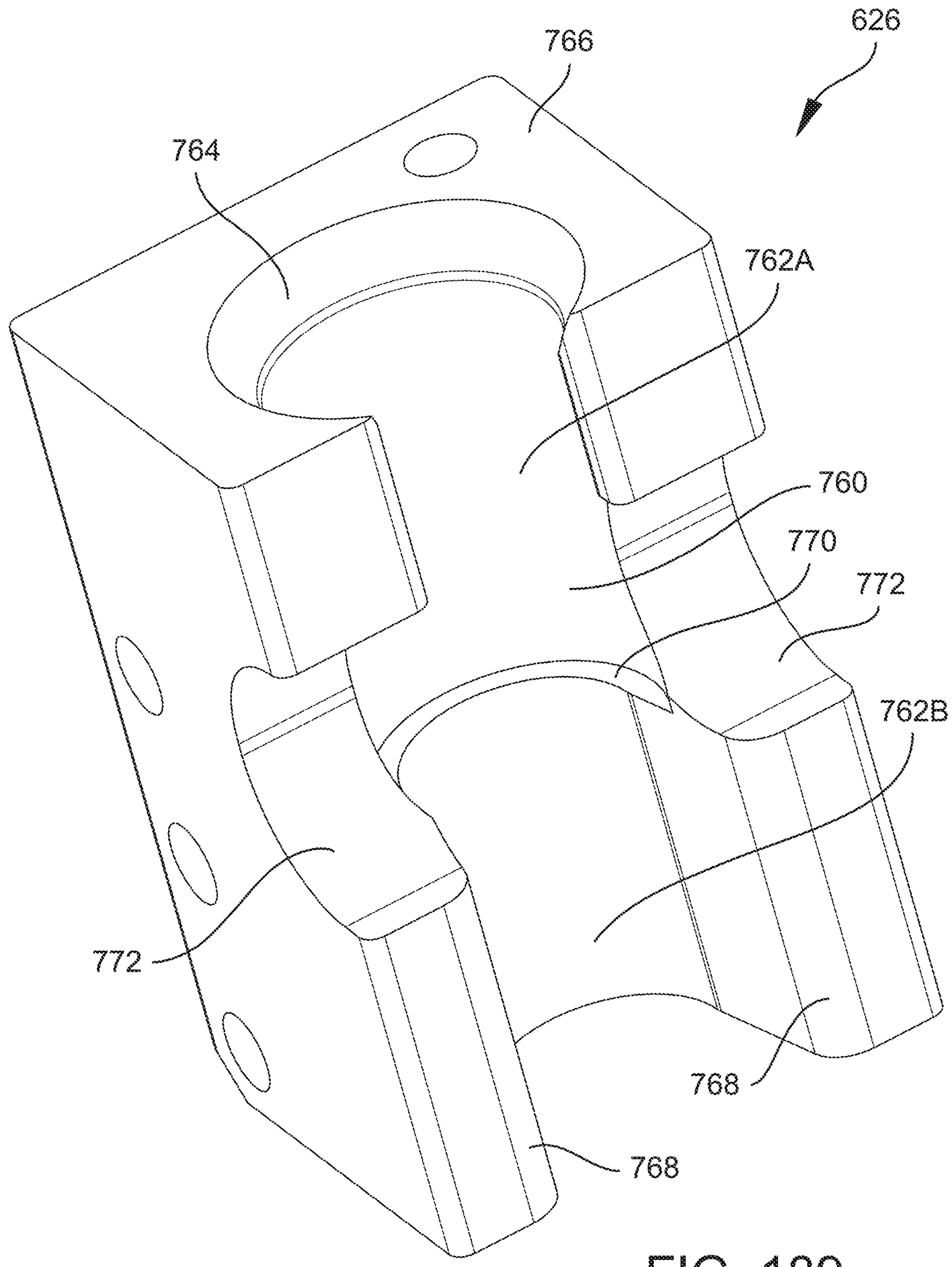

FIG. 189

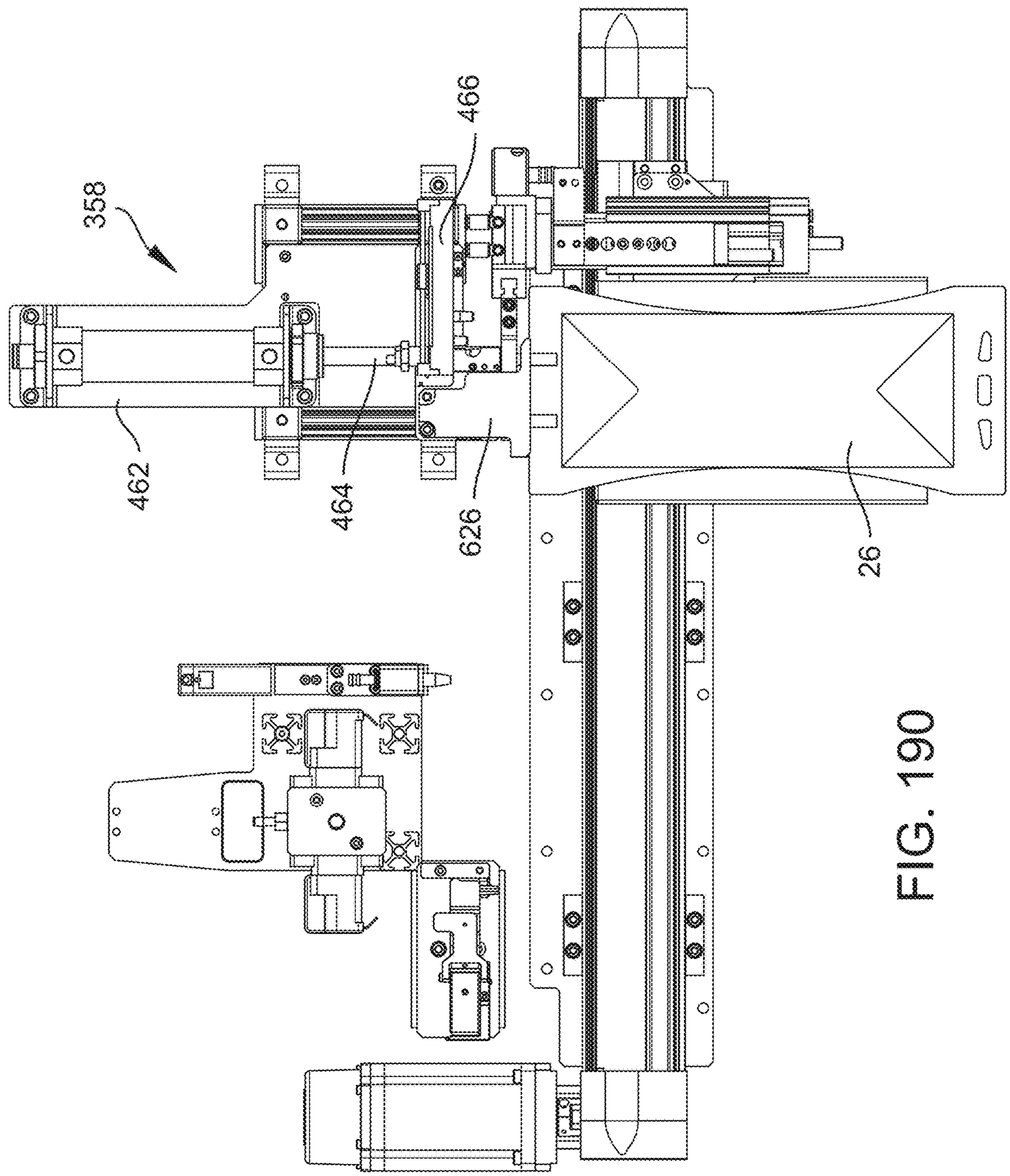

FIG. 190

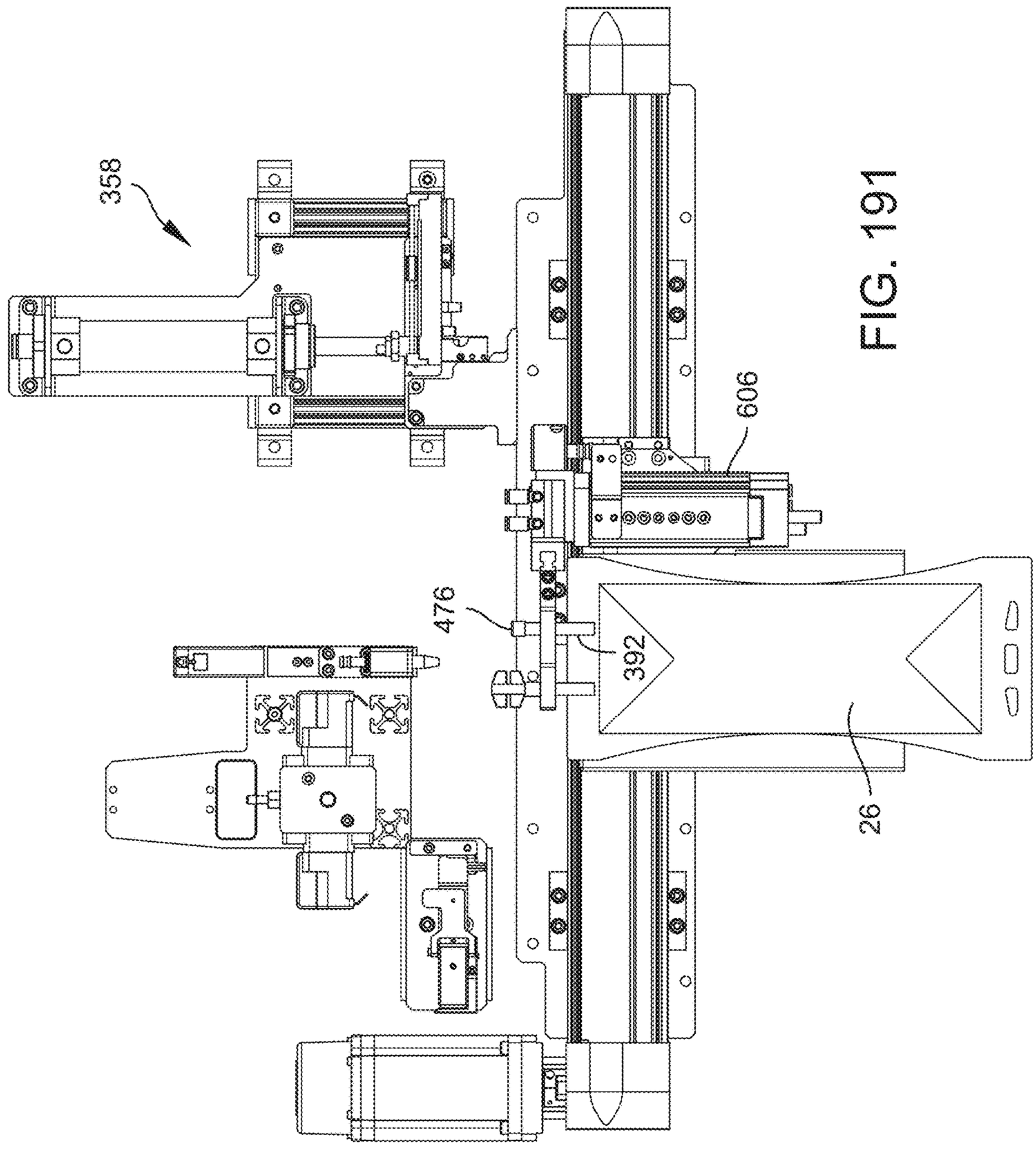

FIG. 191

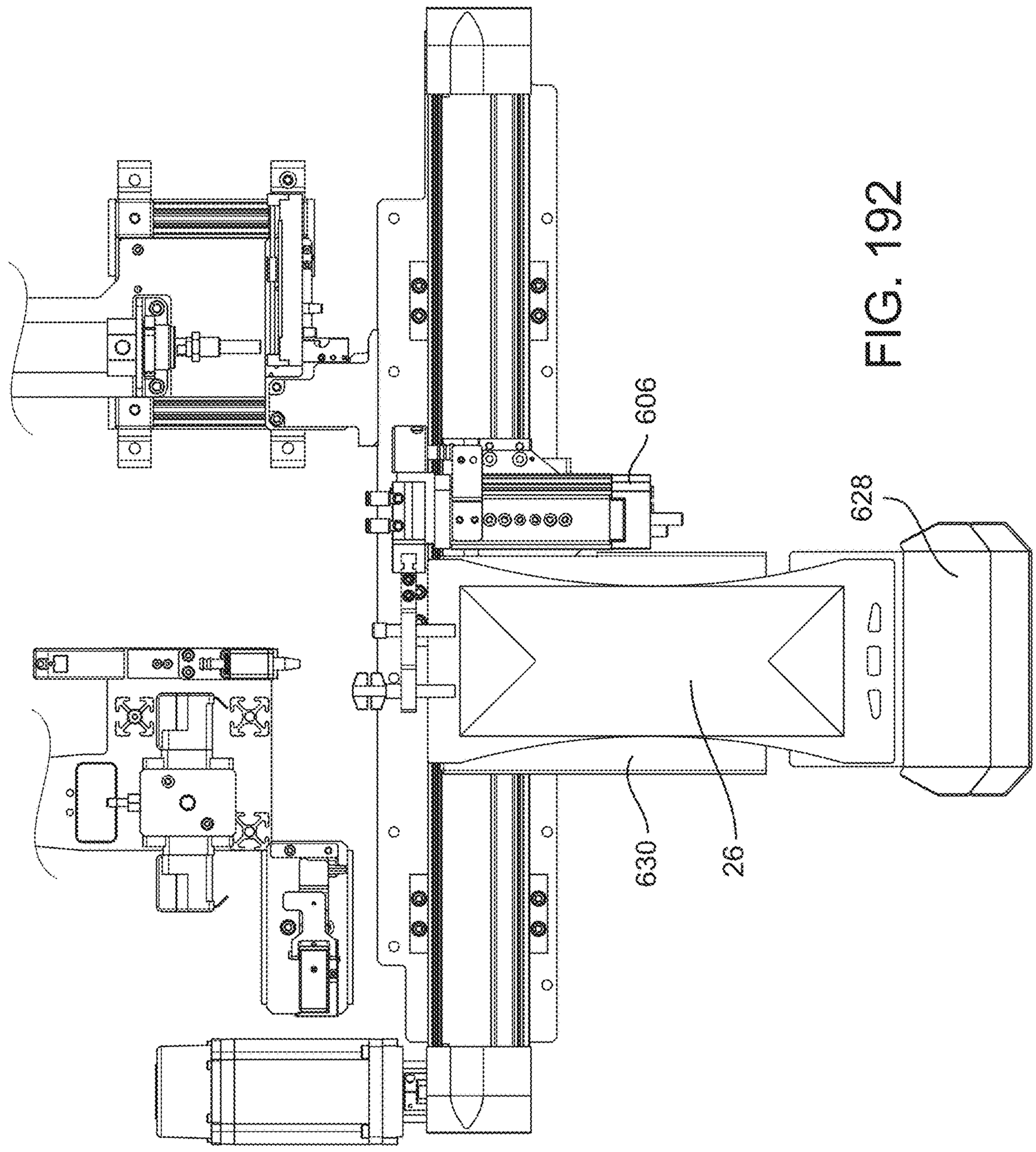

FIG. 192

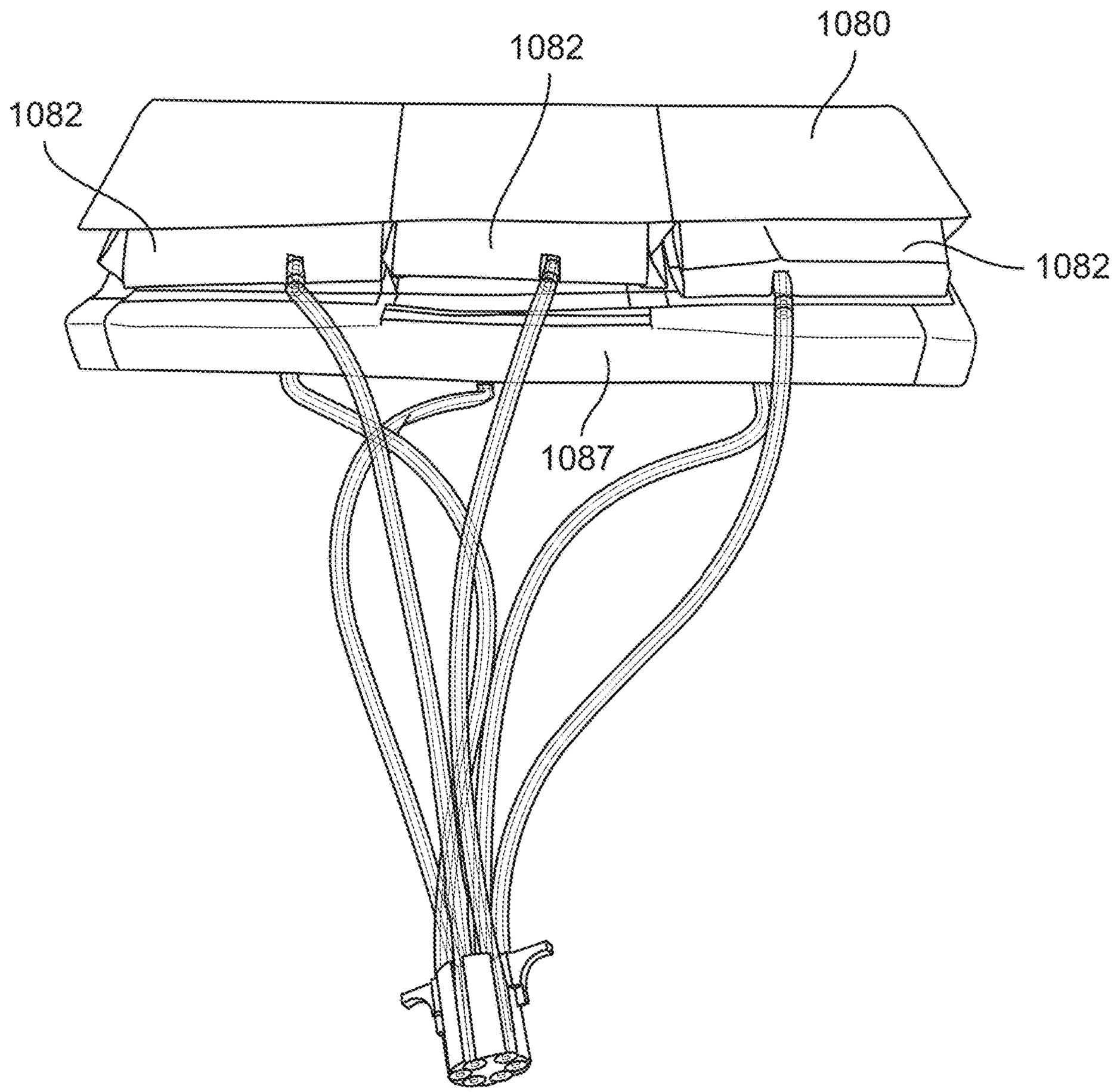

FIG. 193

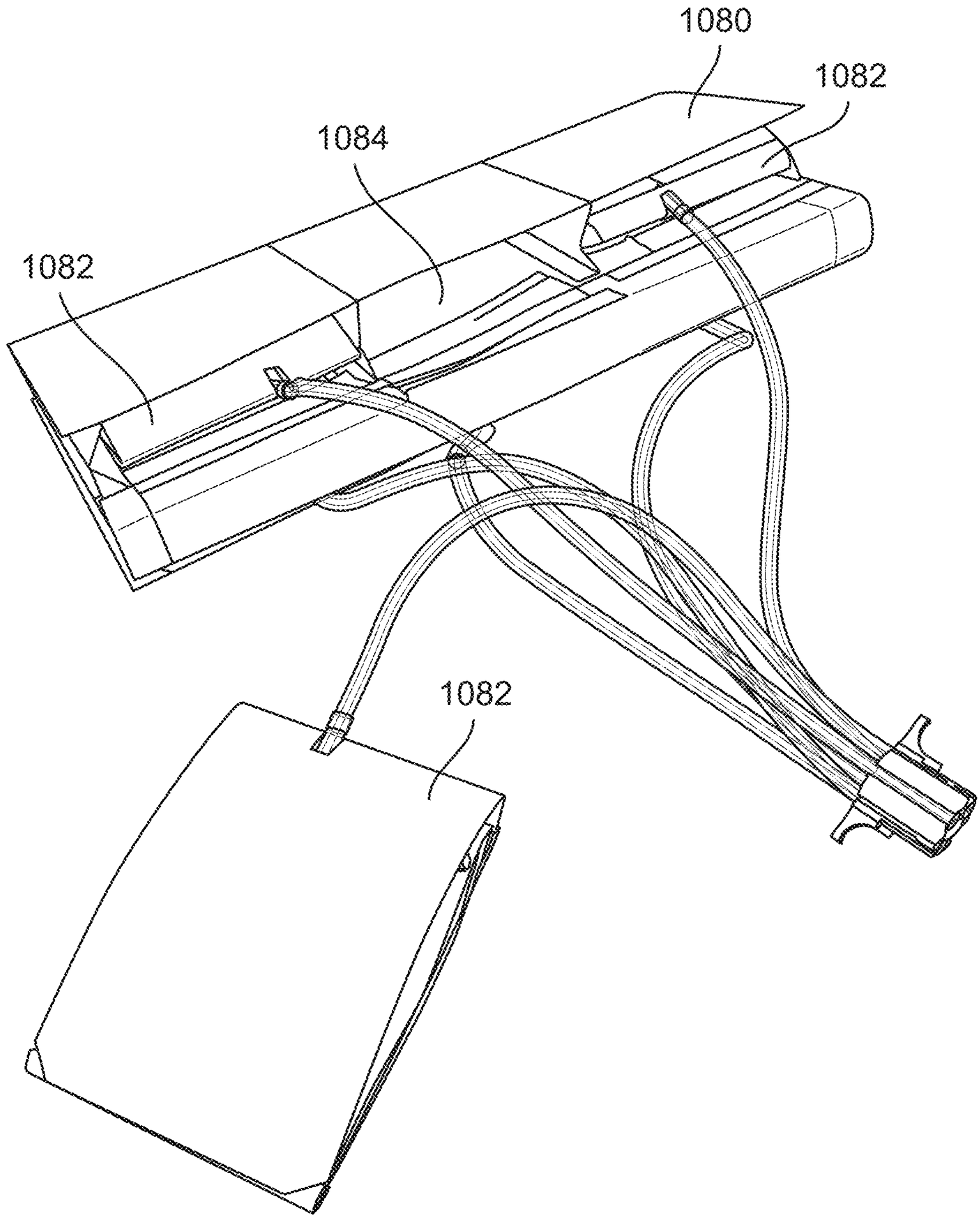

FIG. 194

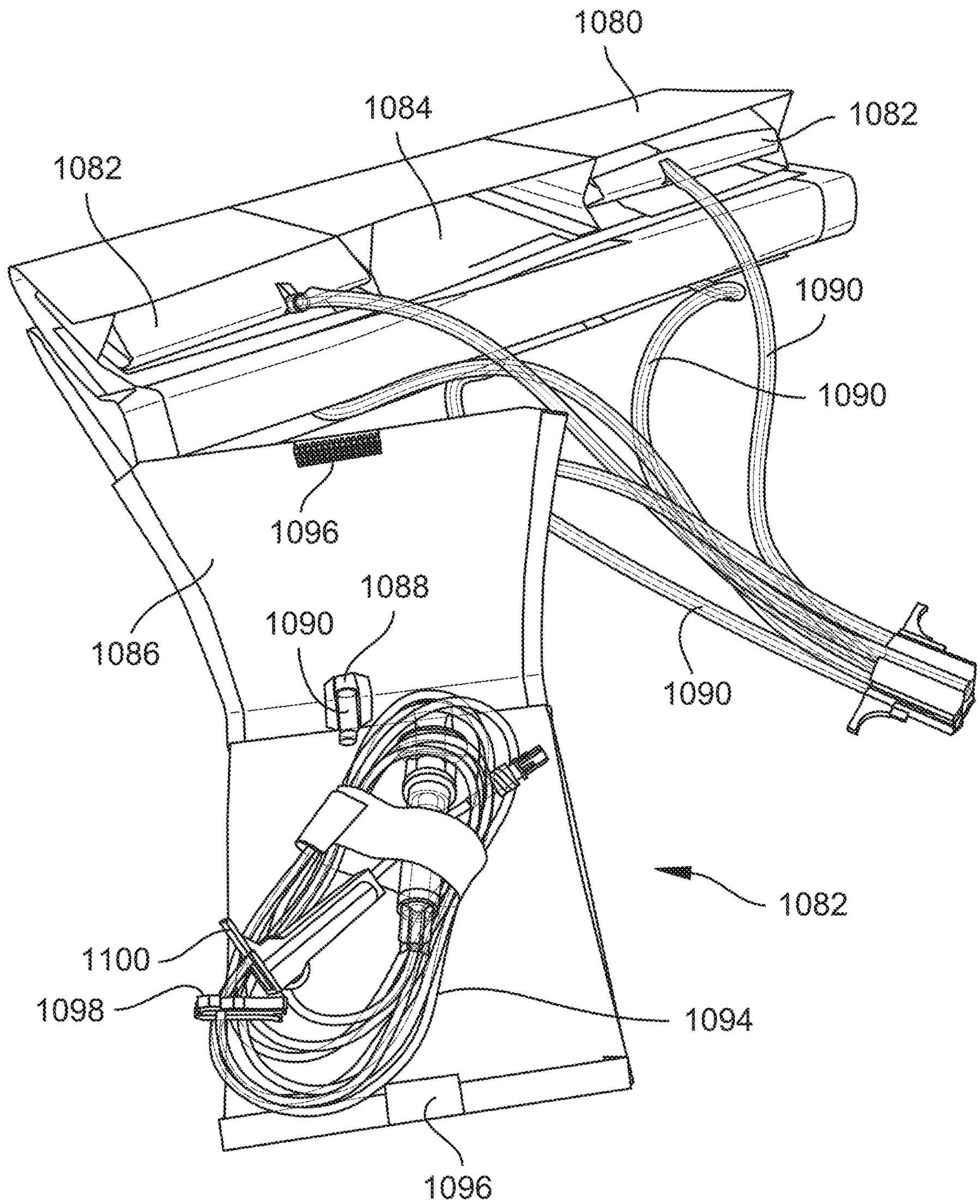
1080
1084
1082
1082
1090
1090
1096
1088
1090
1086
1090
1082
1100
1098
1094
1096

FIG. 195

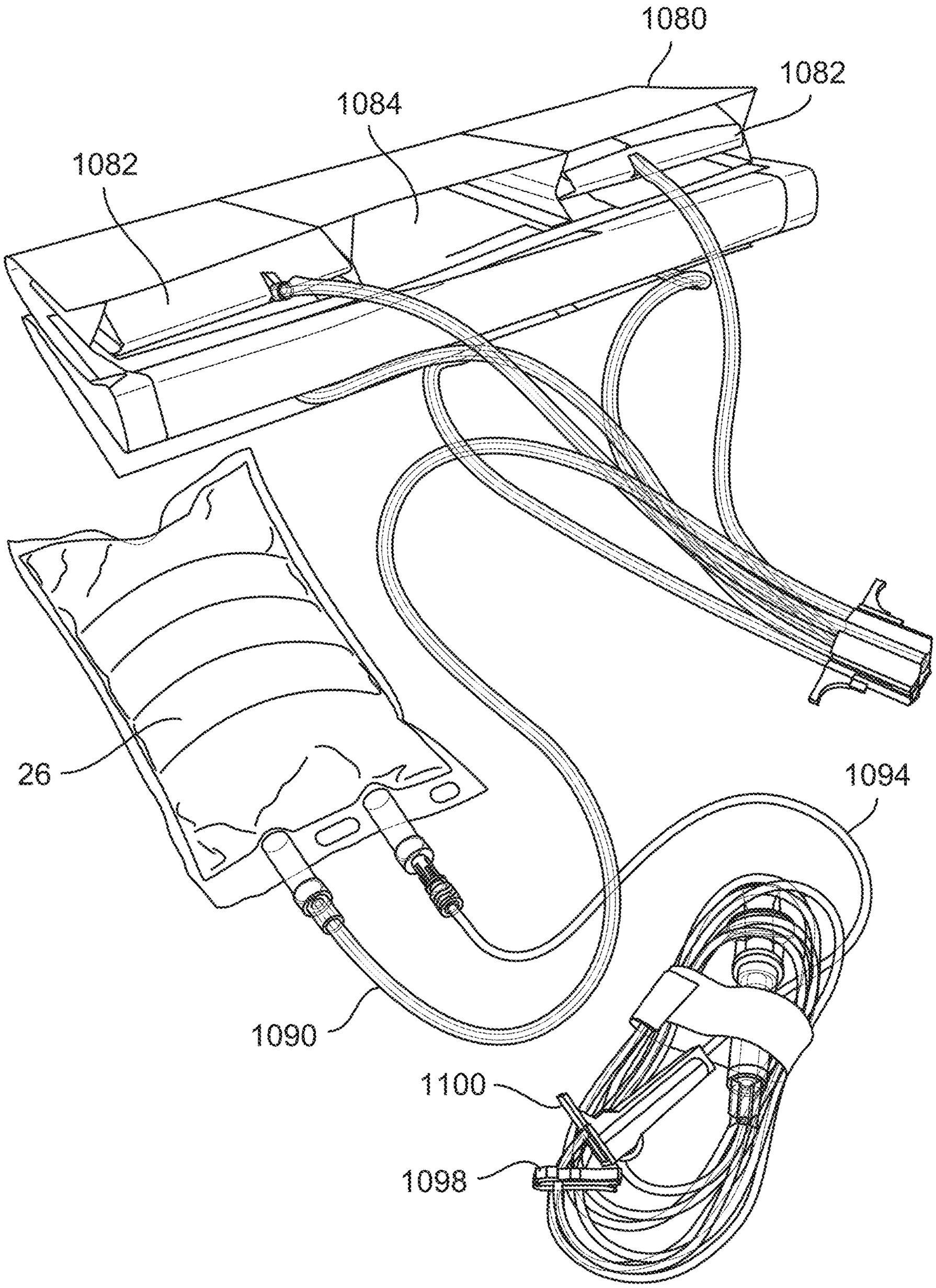

FIG. 196

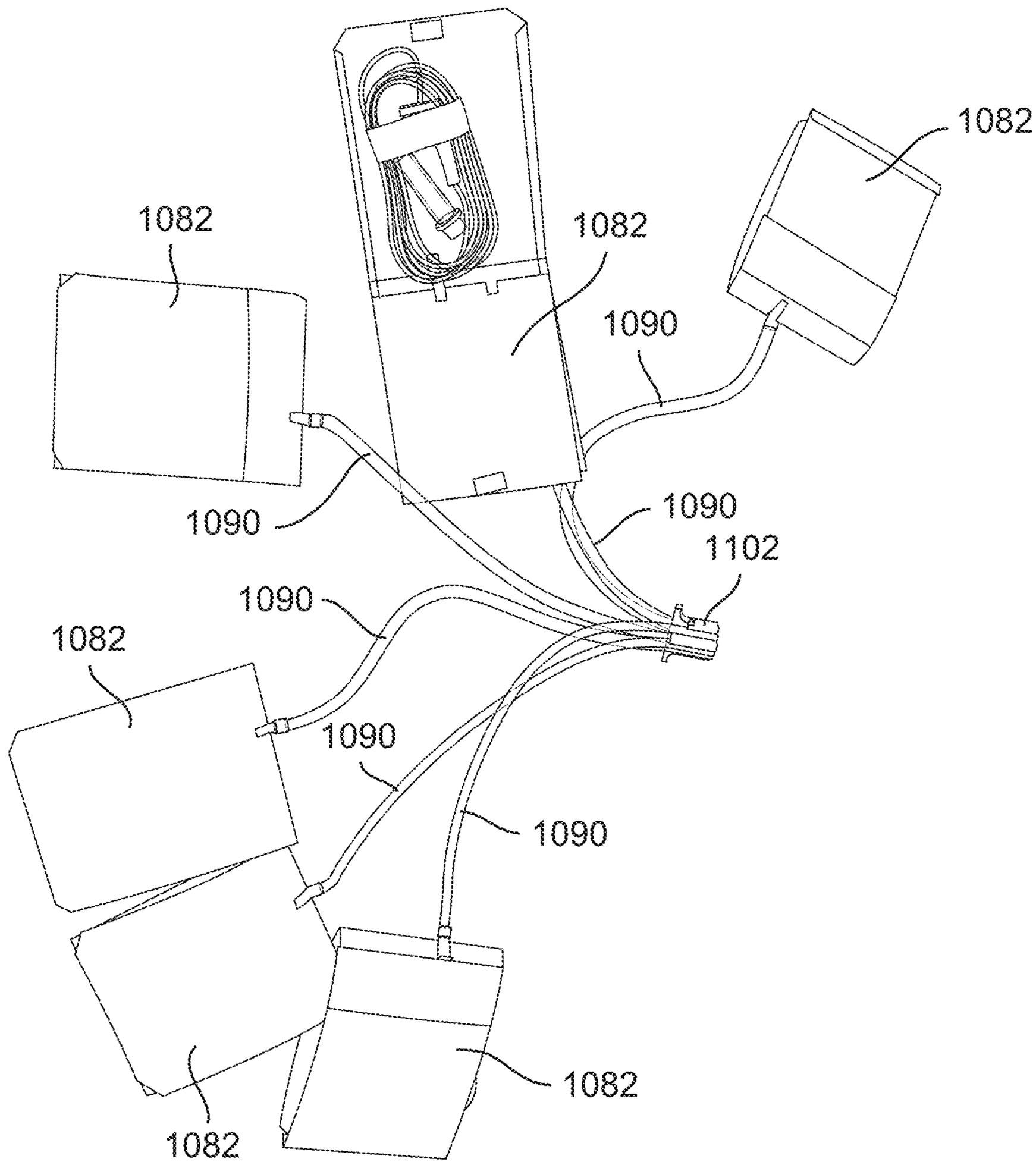
1082
1082
1082
1090
1090
1090
1102
1090
1082
1090
1090
1082
1082

FIG. 197

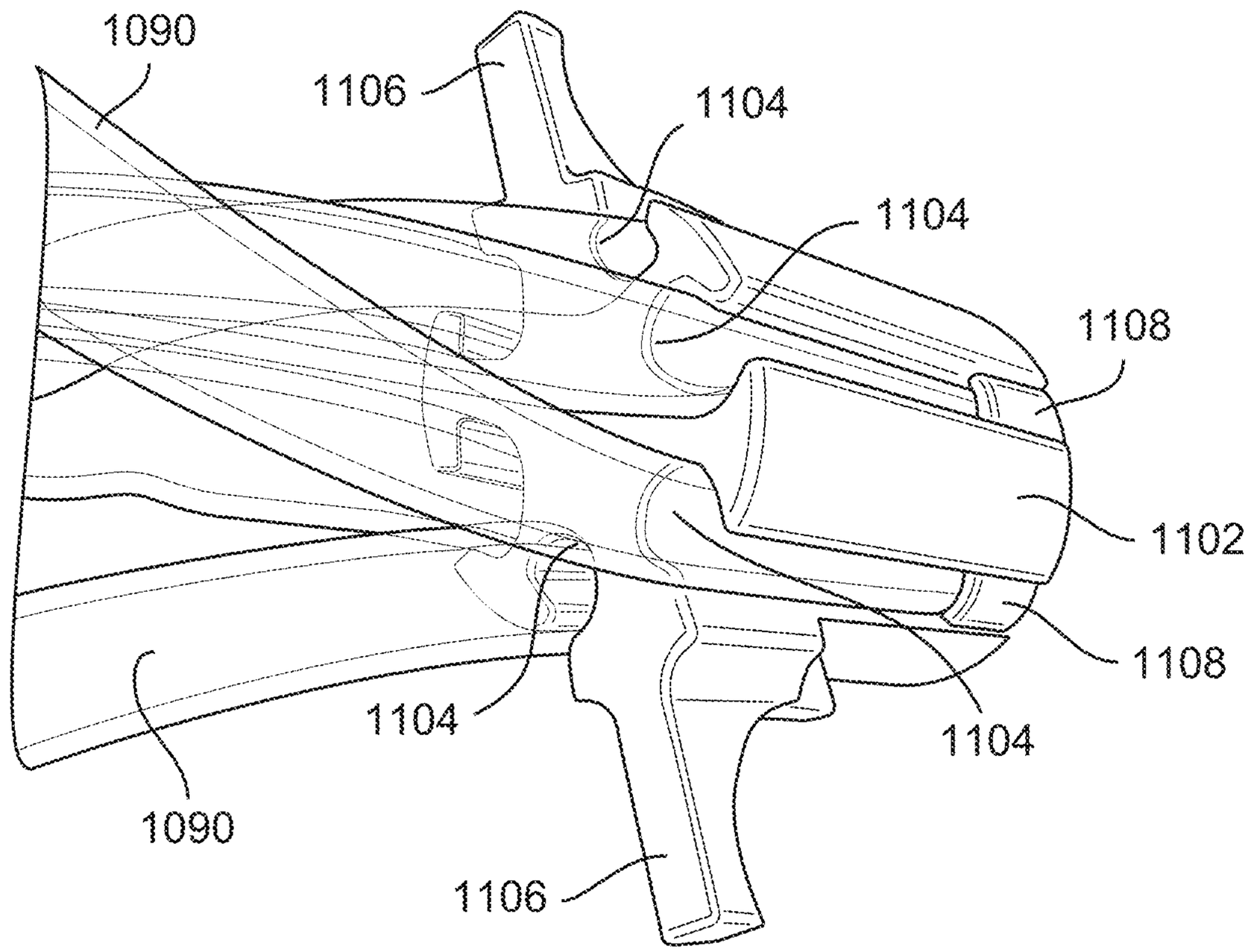

FIG. 198

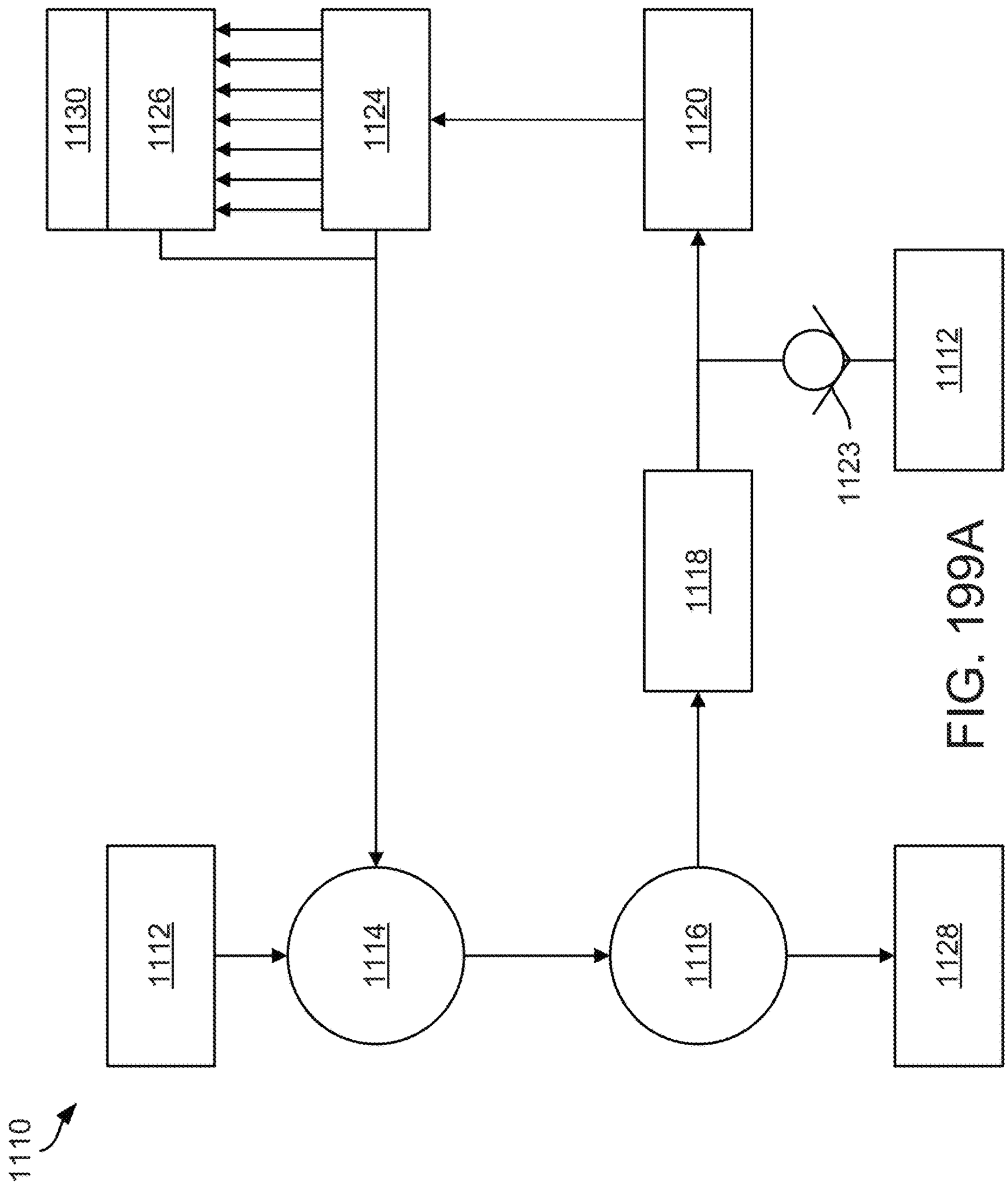

FIG. 199A

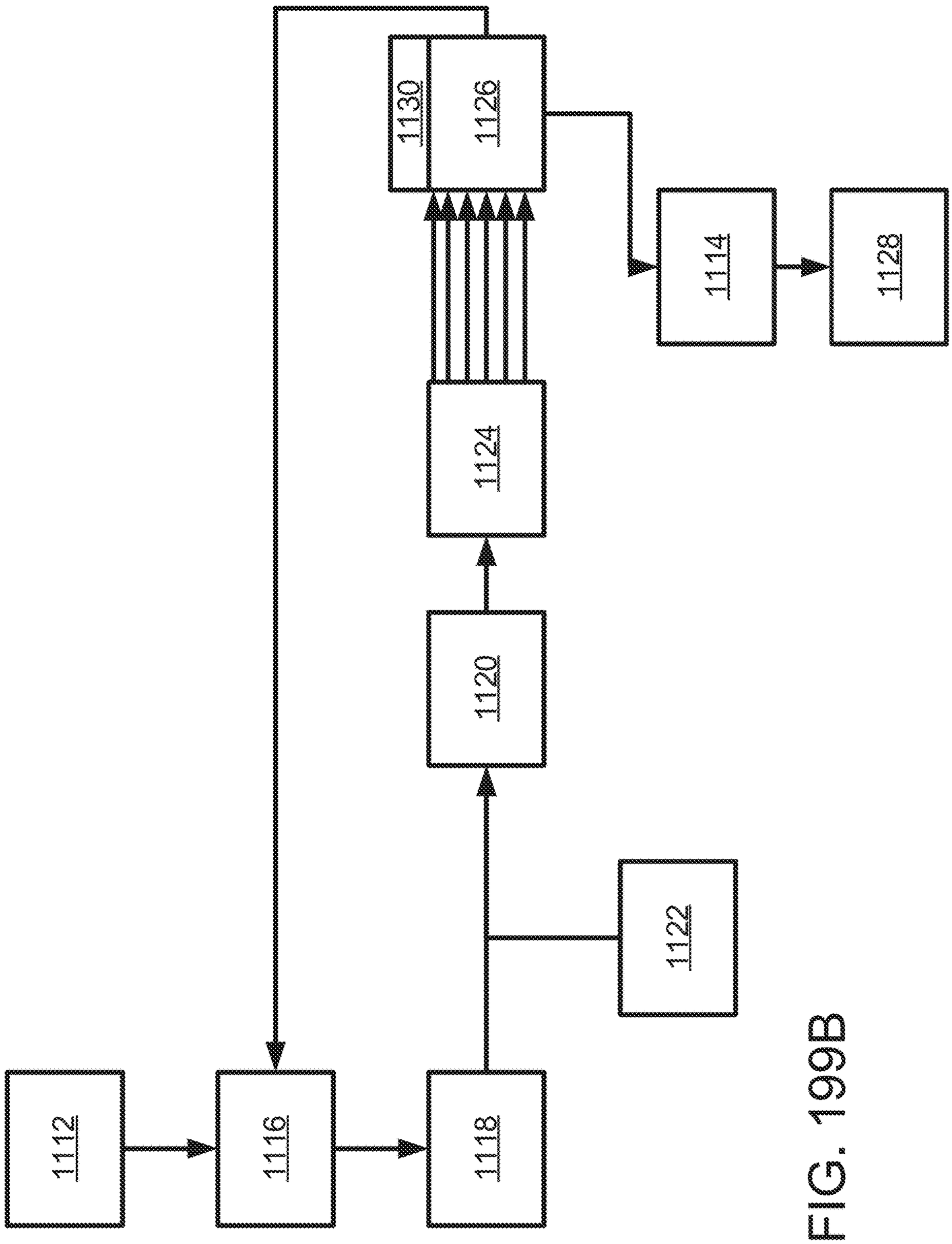

FIG. 199B

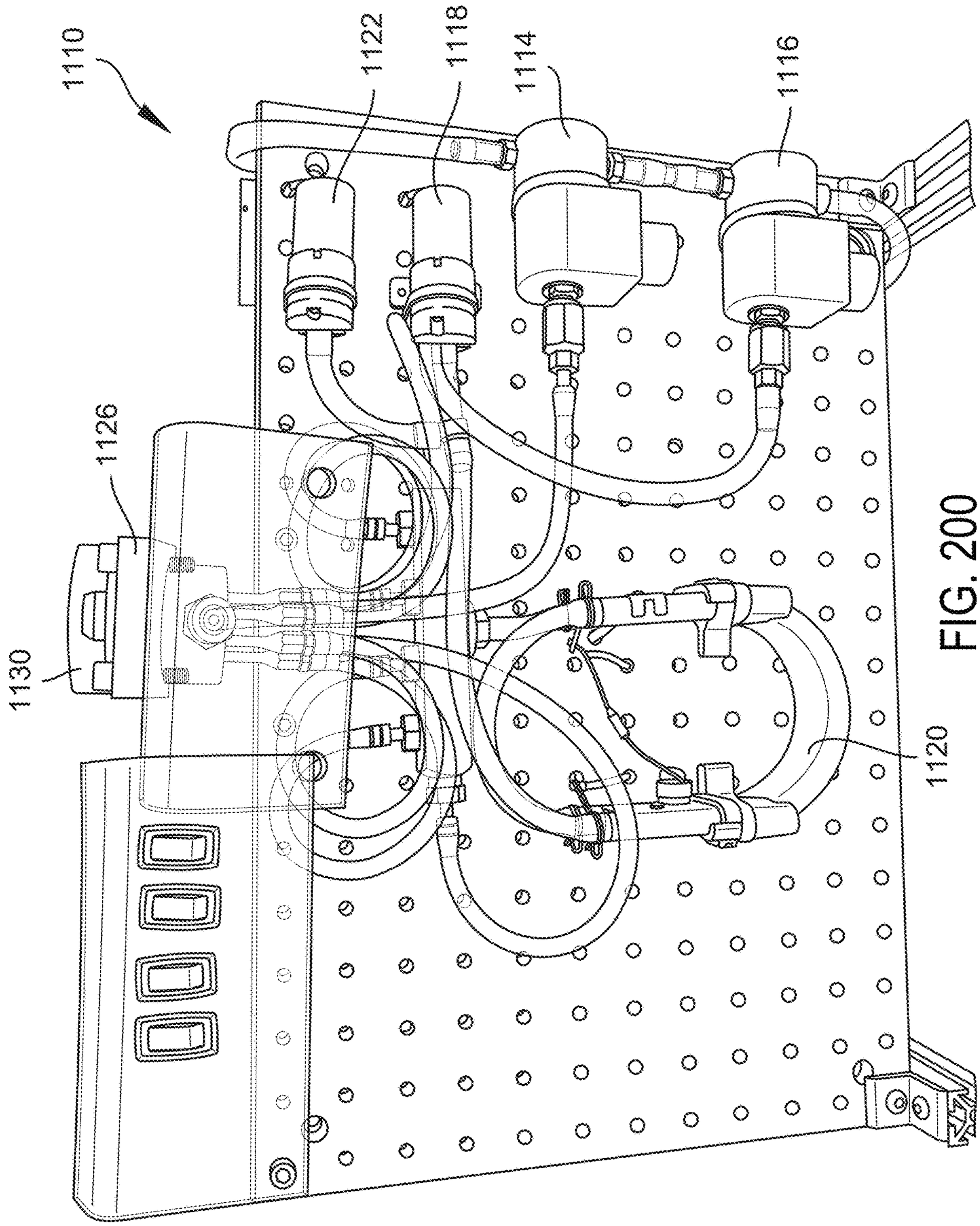

FIG. 200

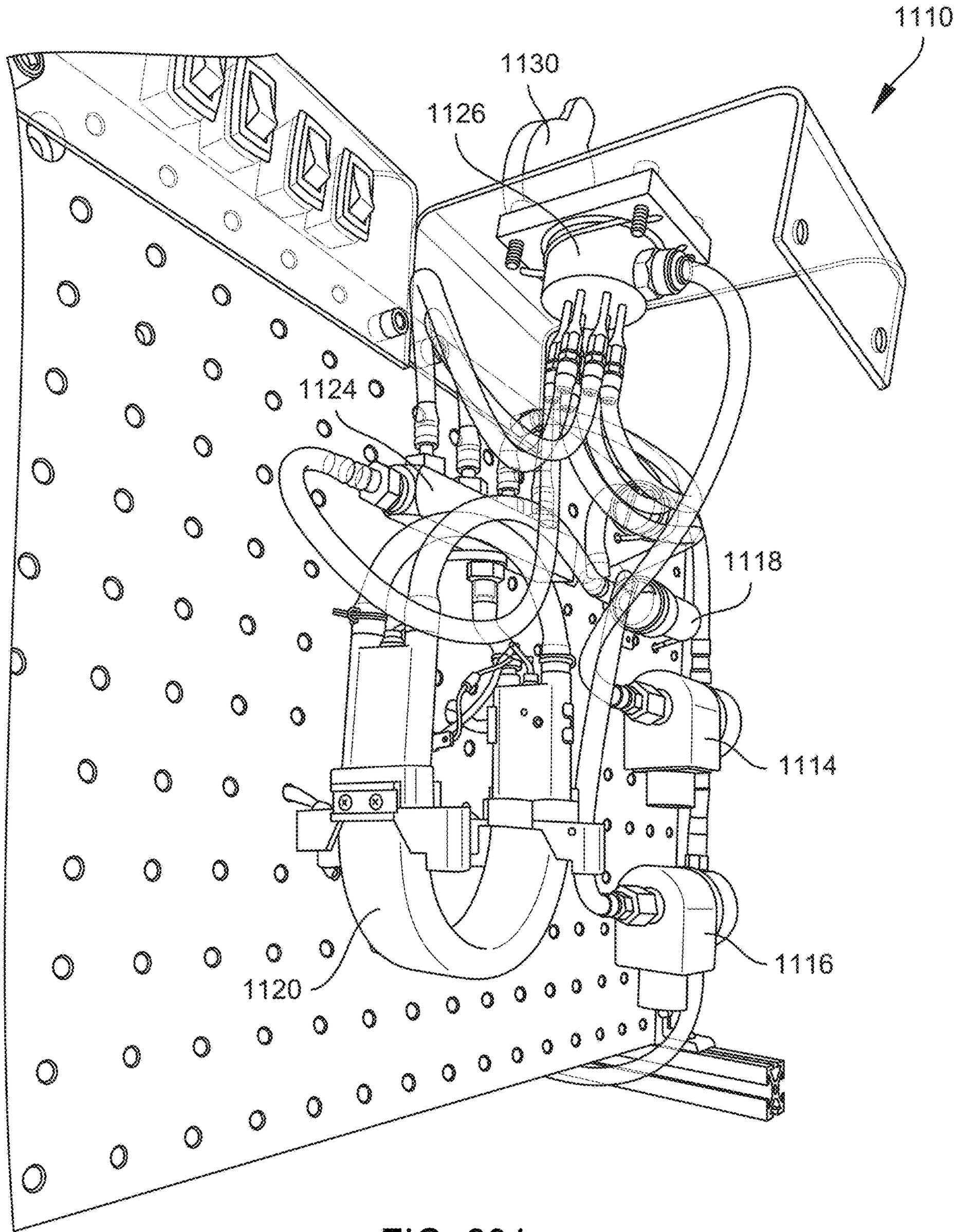

FIG. 201

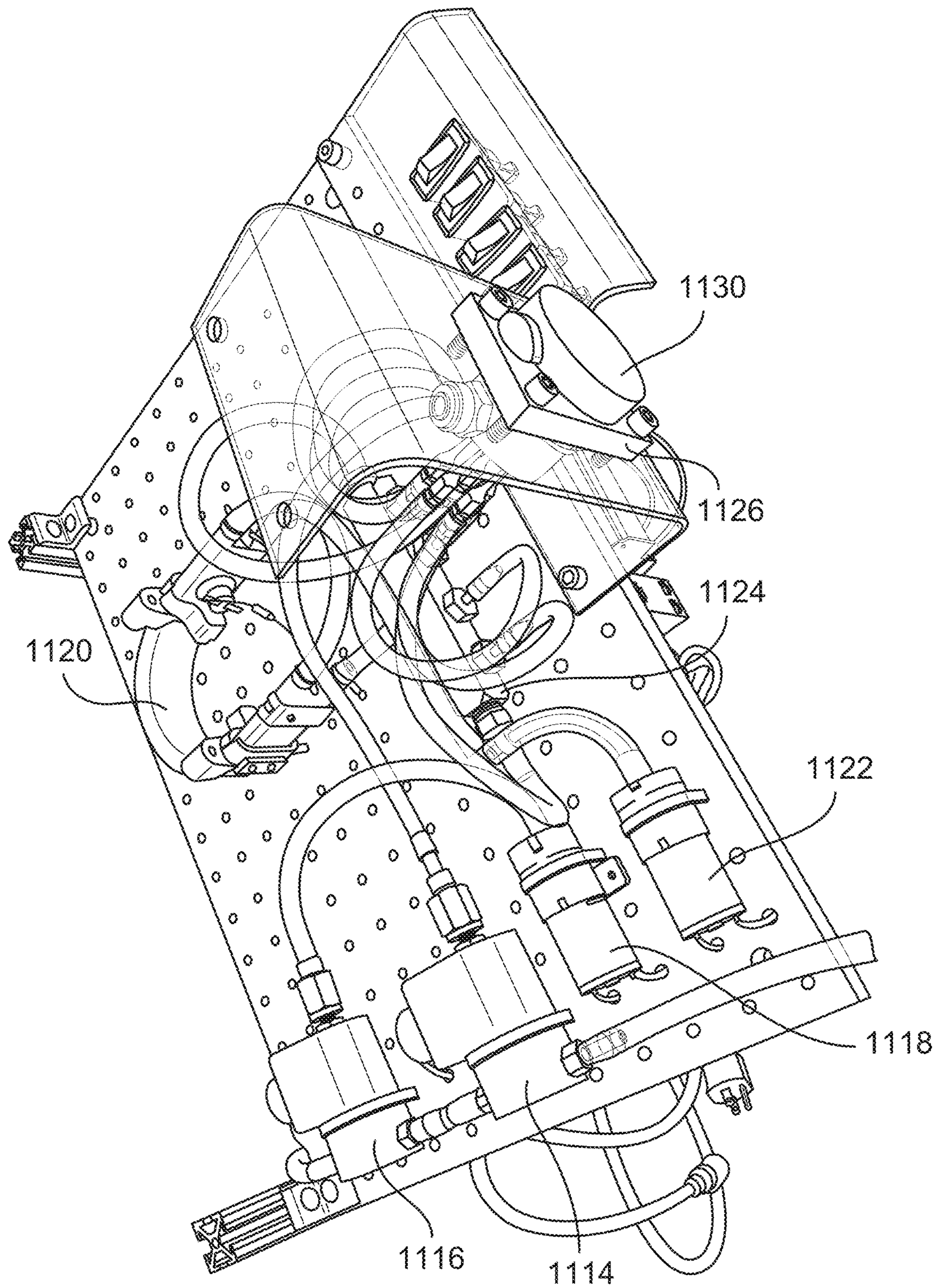

FIG. 202

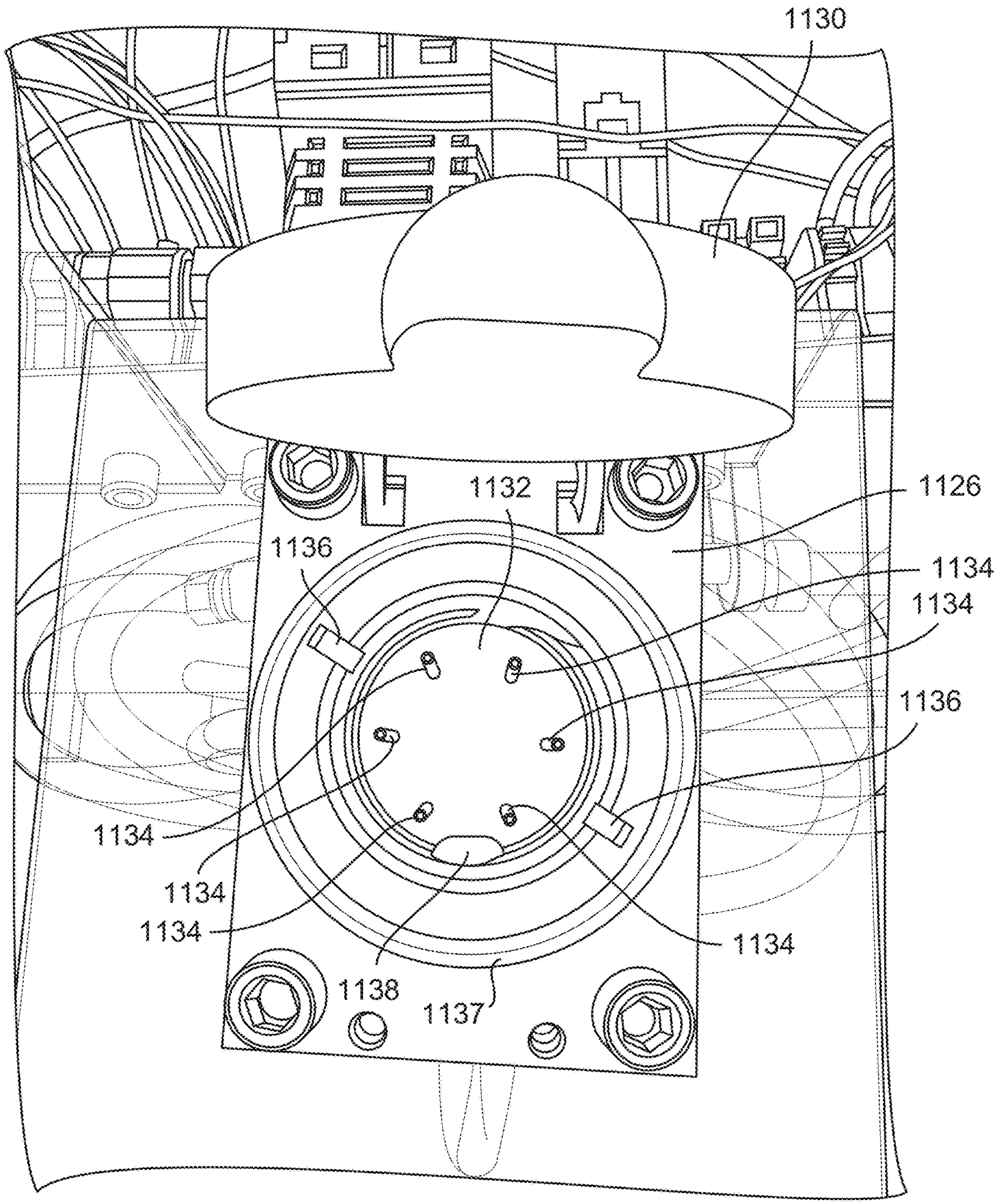
1130
1132
1126
1136
1134
1134
1136
1134
1134
1134
1134
1138
1137

FIG. 203

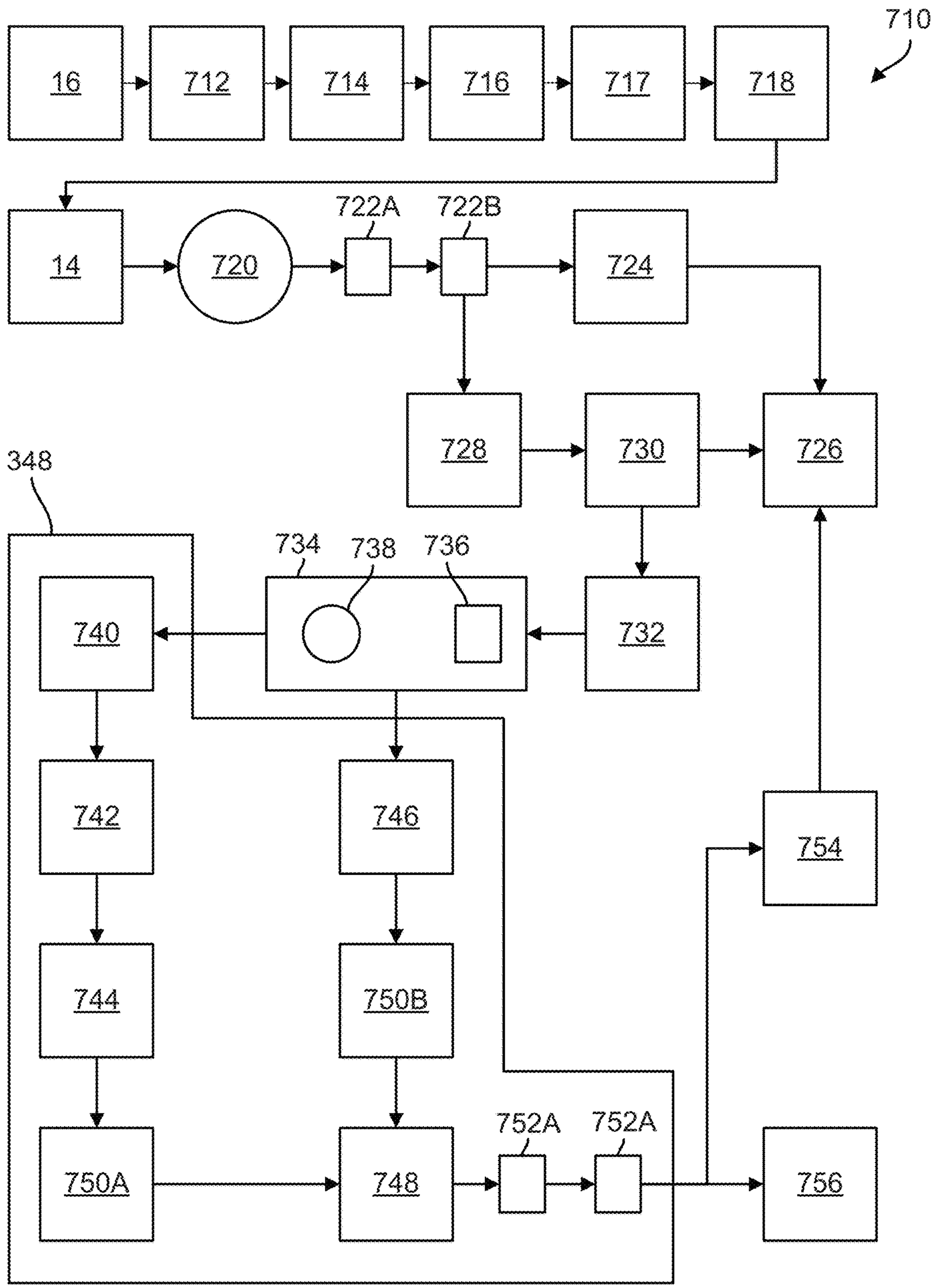
710
16
712
714
716
717
718
14
720
722A
722B
724
728
730
726
348
734
738
736
740
732
742
746
754
744
750B
752A
752A
750A
748
756

FIG. 204

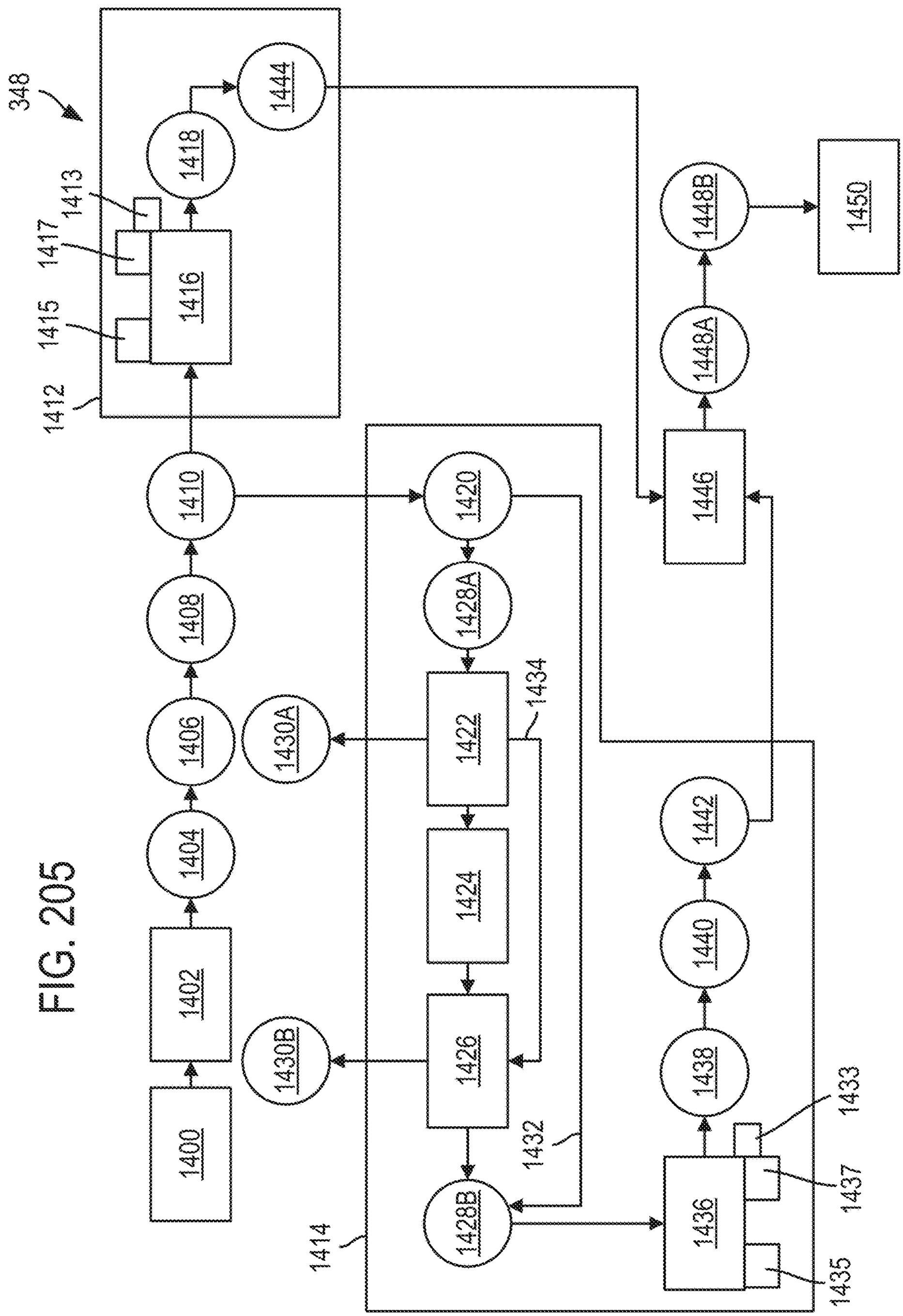
348
1400
1402
1404
1406
1408
1410
1412
1414
1415
1416
1417
1413
1418
1420
1422
1424
1426
1428A
1428B
1430A
1430B
1432
1434
1433
1435
1436
1437
1438
1440
1442
1444
1446
1448A
1448B
1450

FIG. 2055

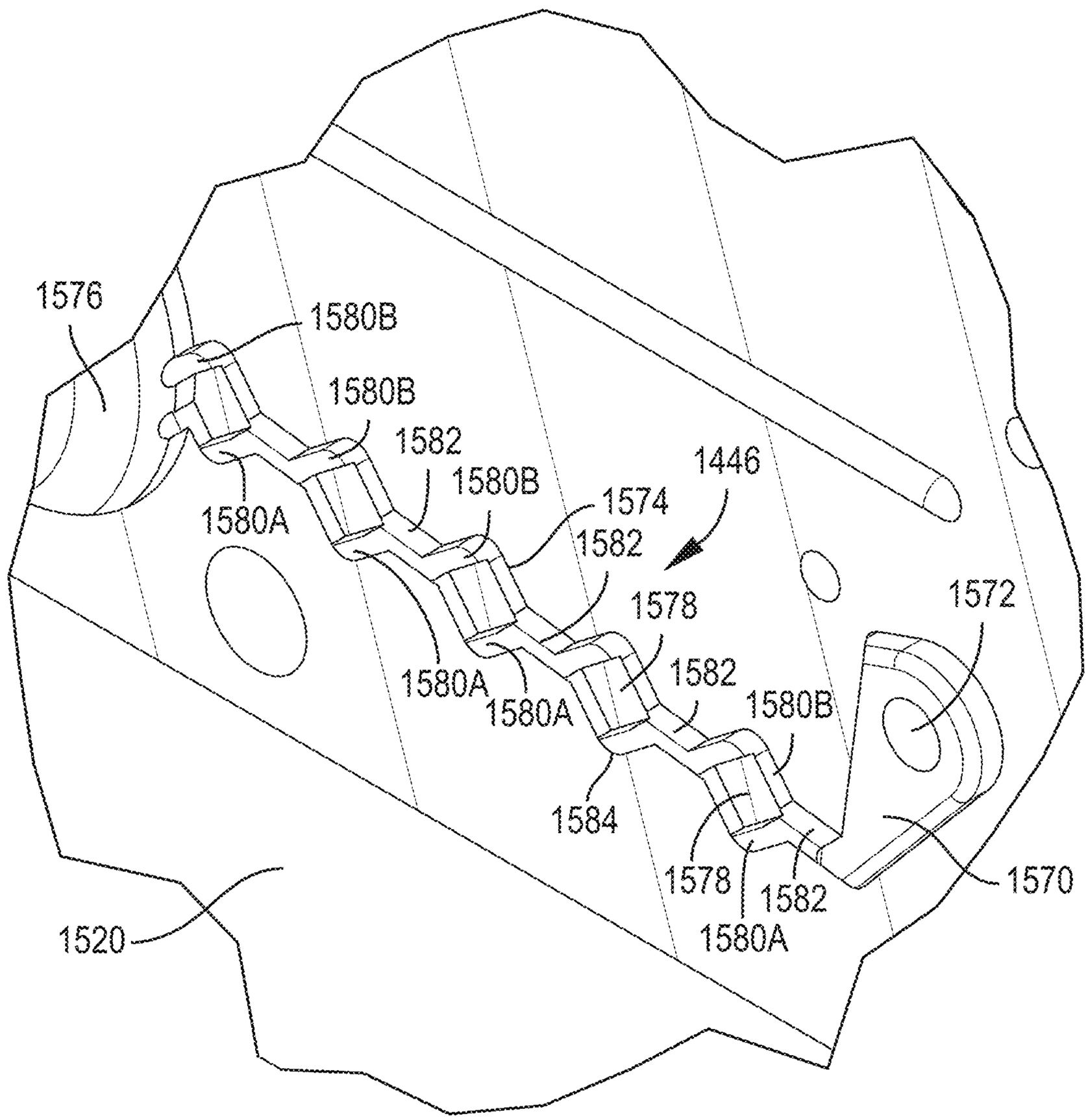
1576
1580B
1580B
1582
1580B
1446
1574
1580A
1582
1578
1572
1580A
1580A
1582
1580B
1584
1578
1582
1580A
1570
1520

FIG. 206

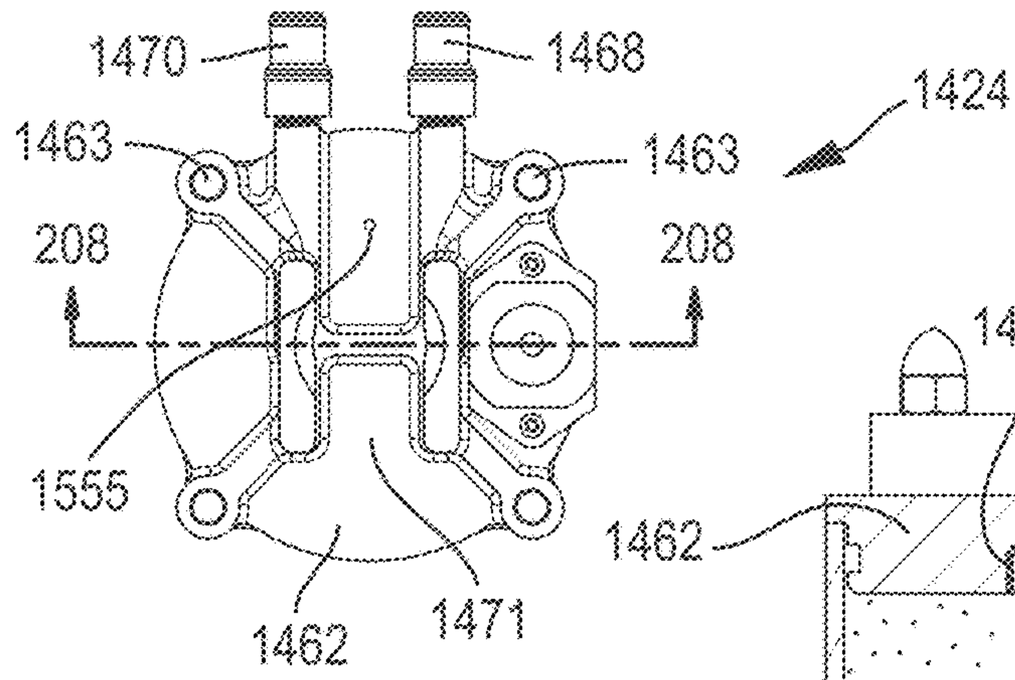

FIG. 207

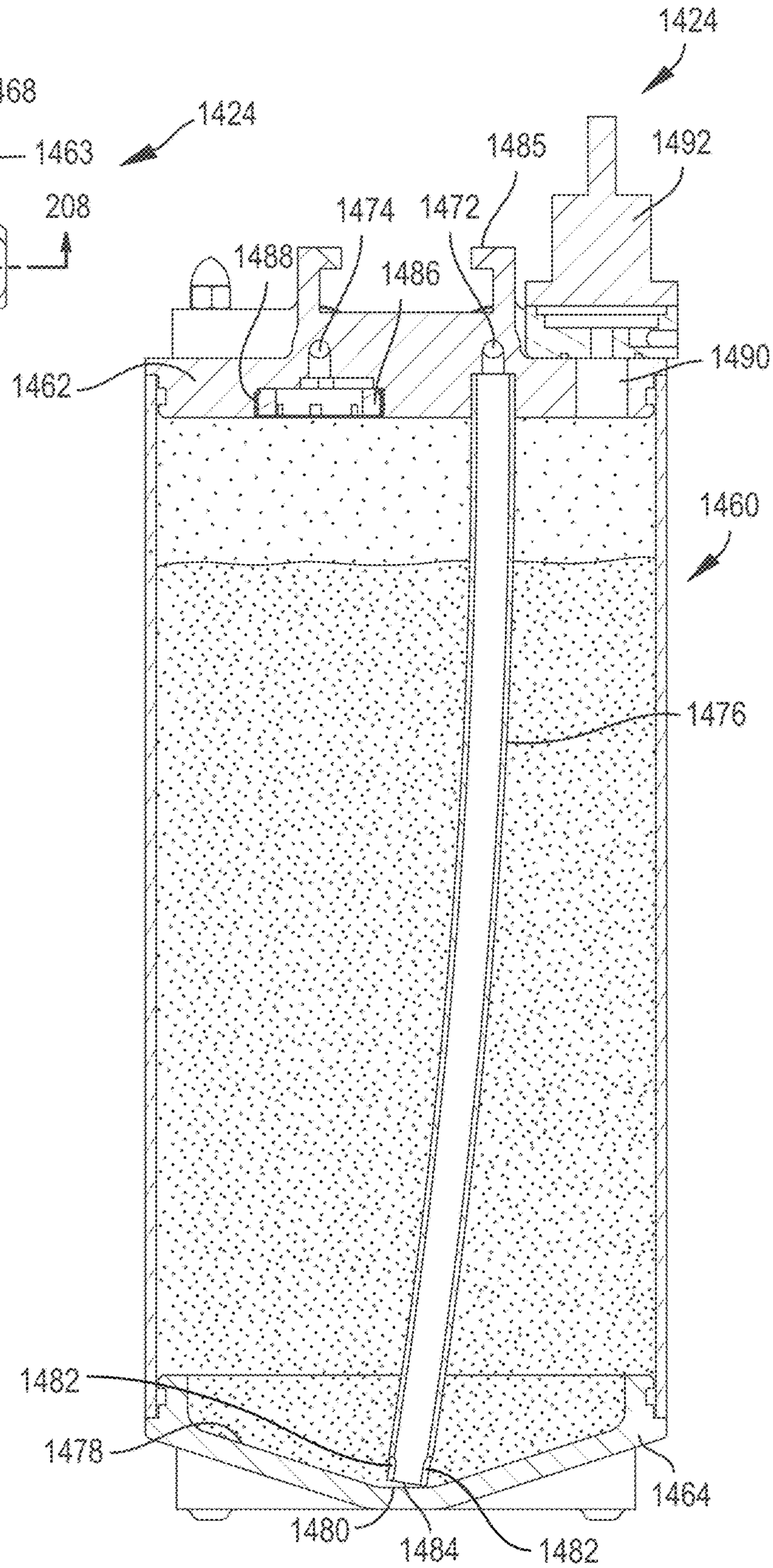

FIG. 208

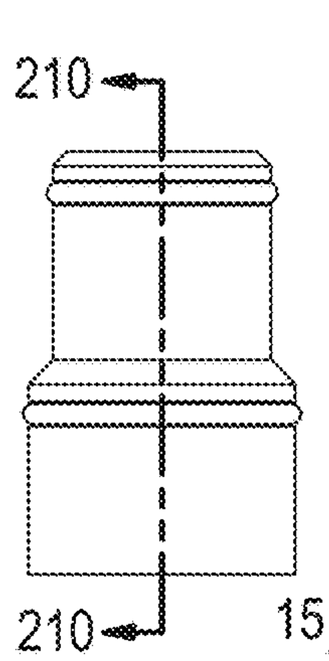

FIG. 209

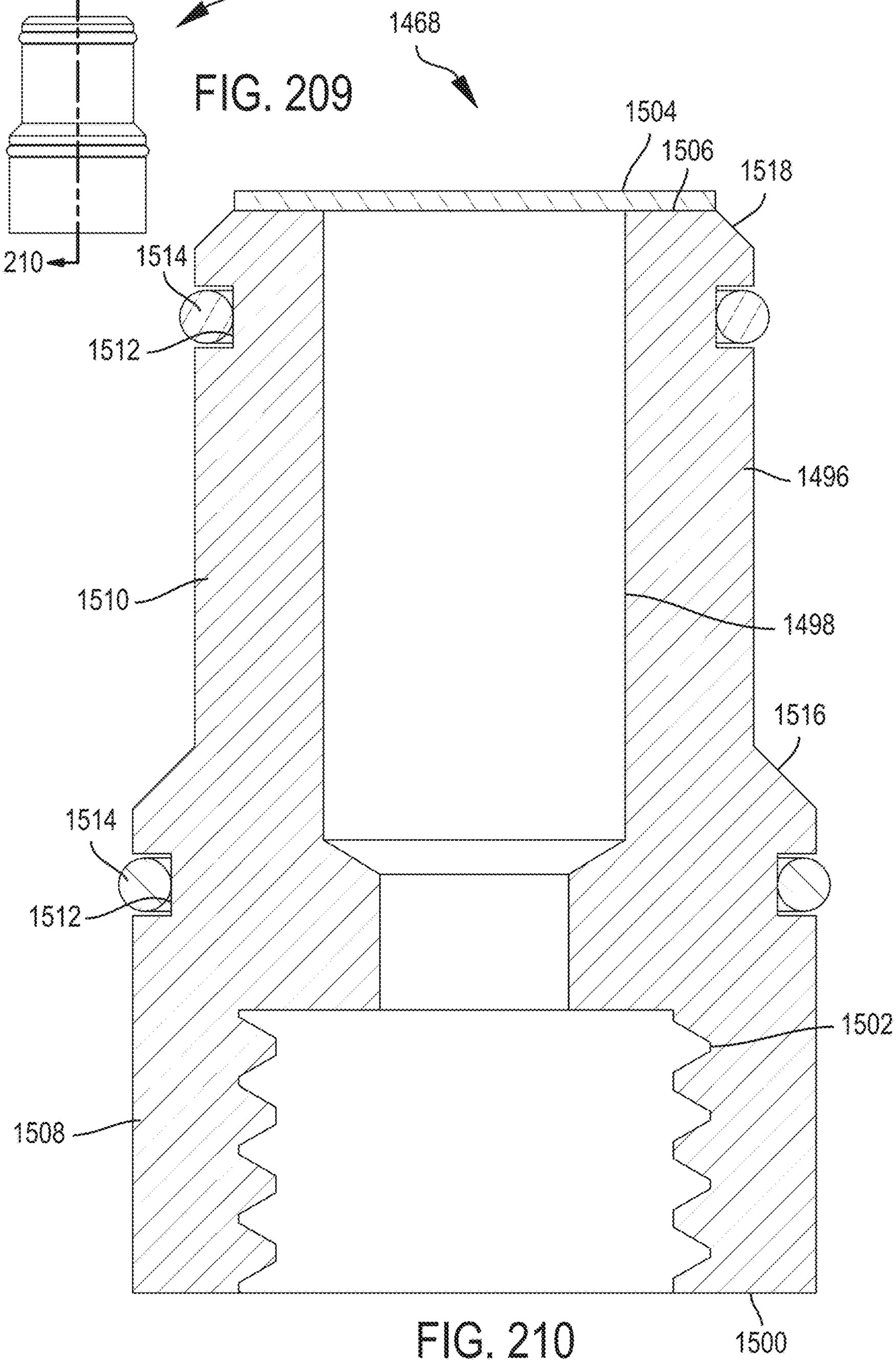

FIG. 210

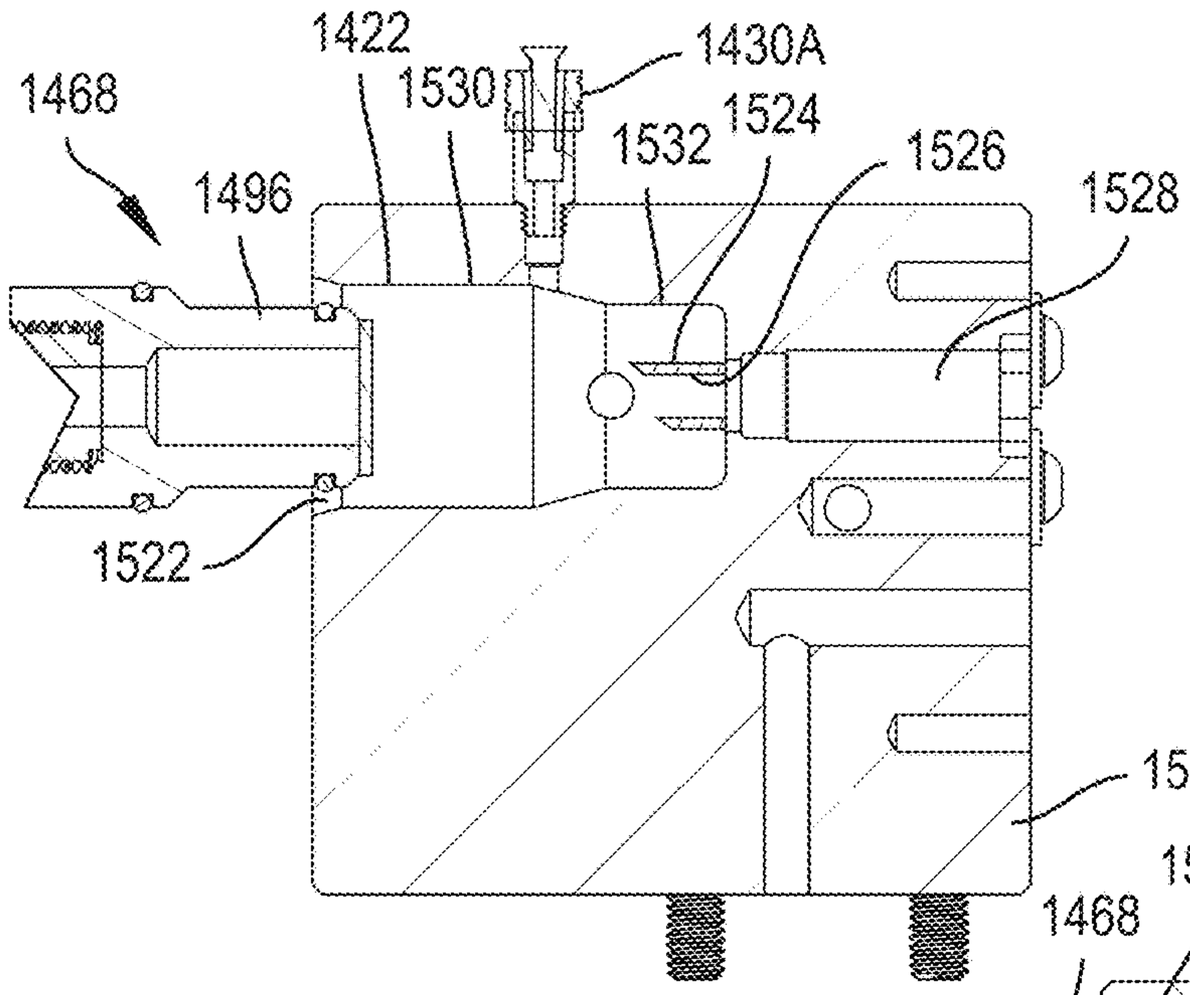

FIG. 211

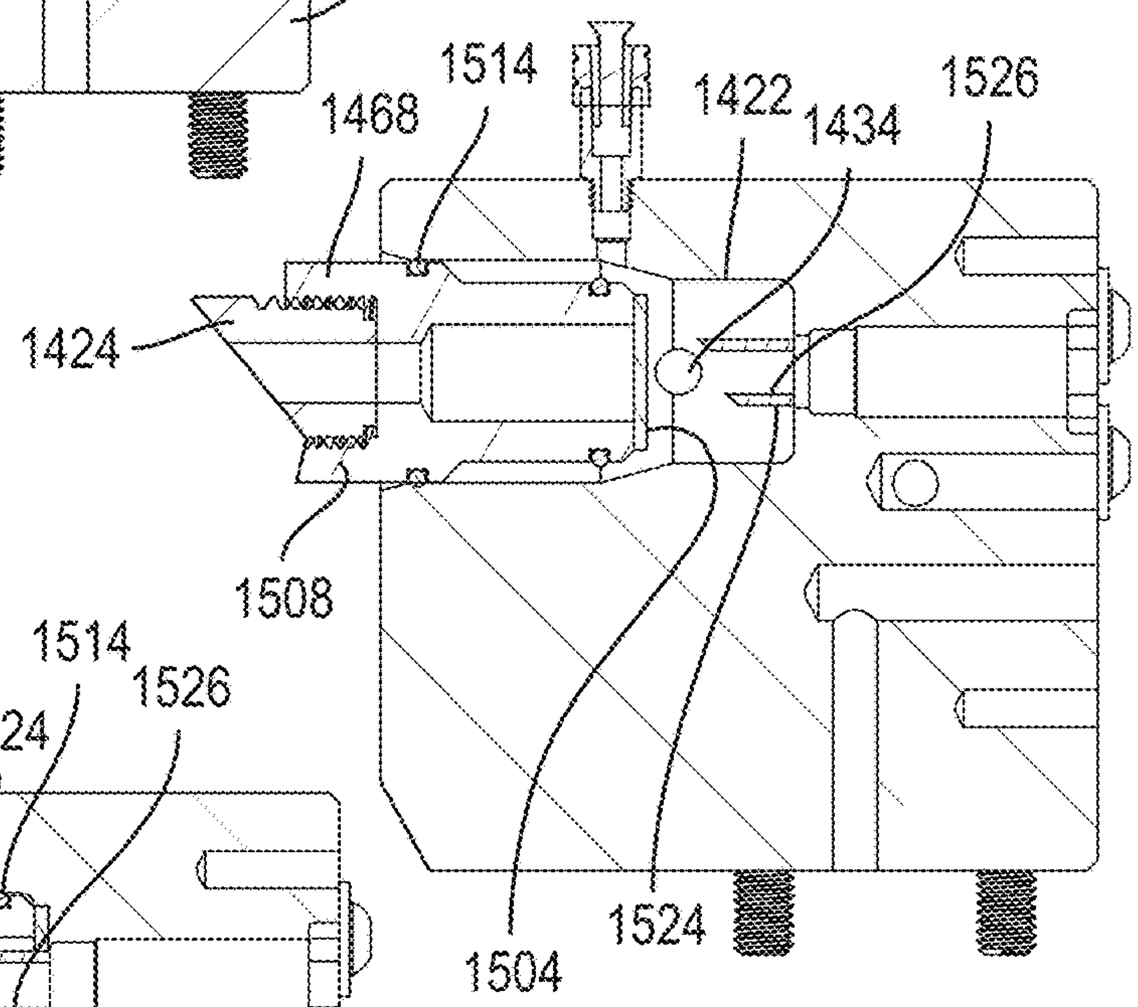

FIG. 212

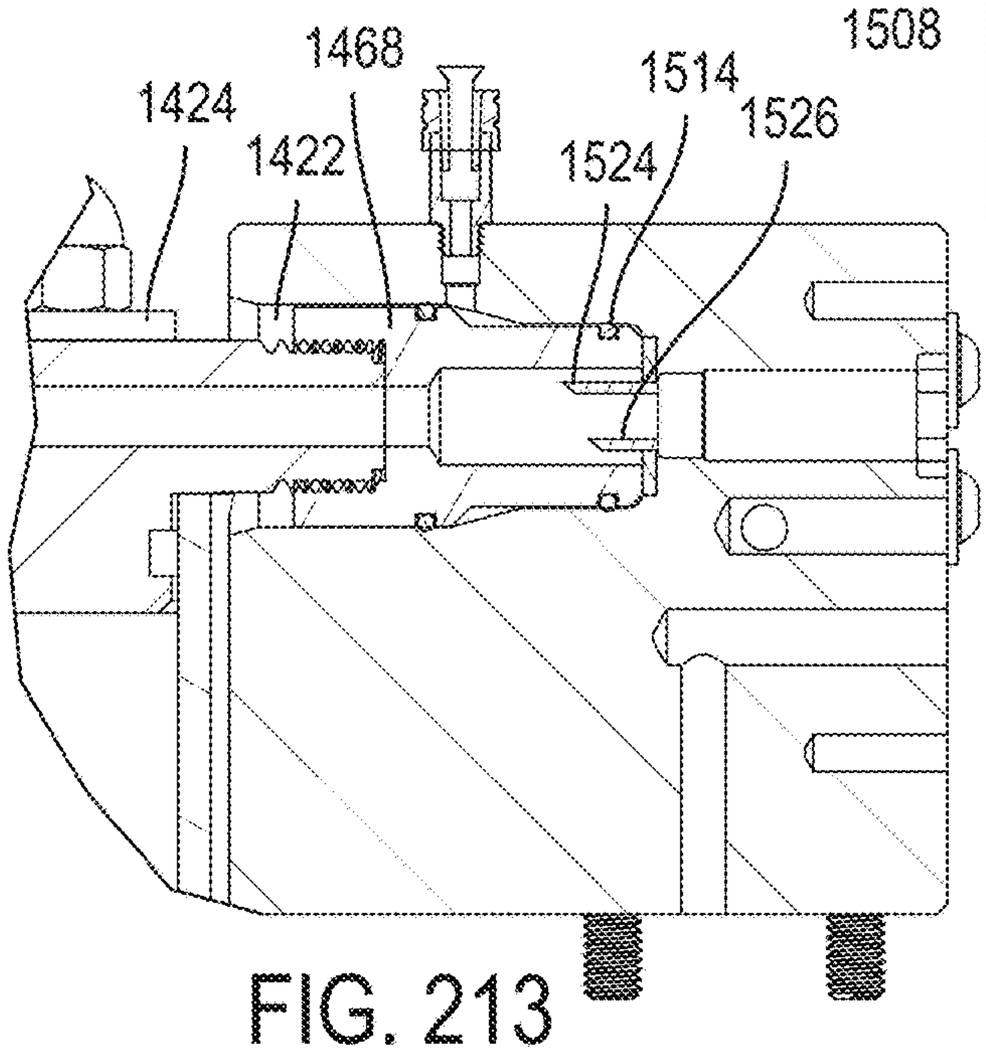

FIG. 213

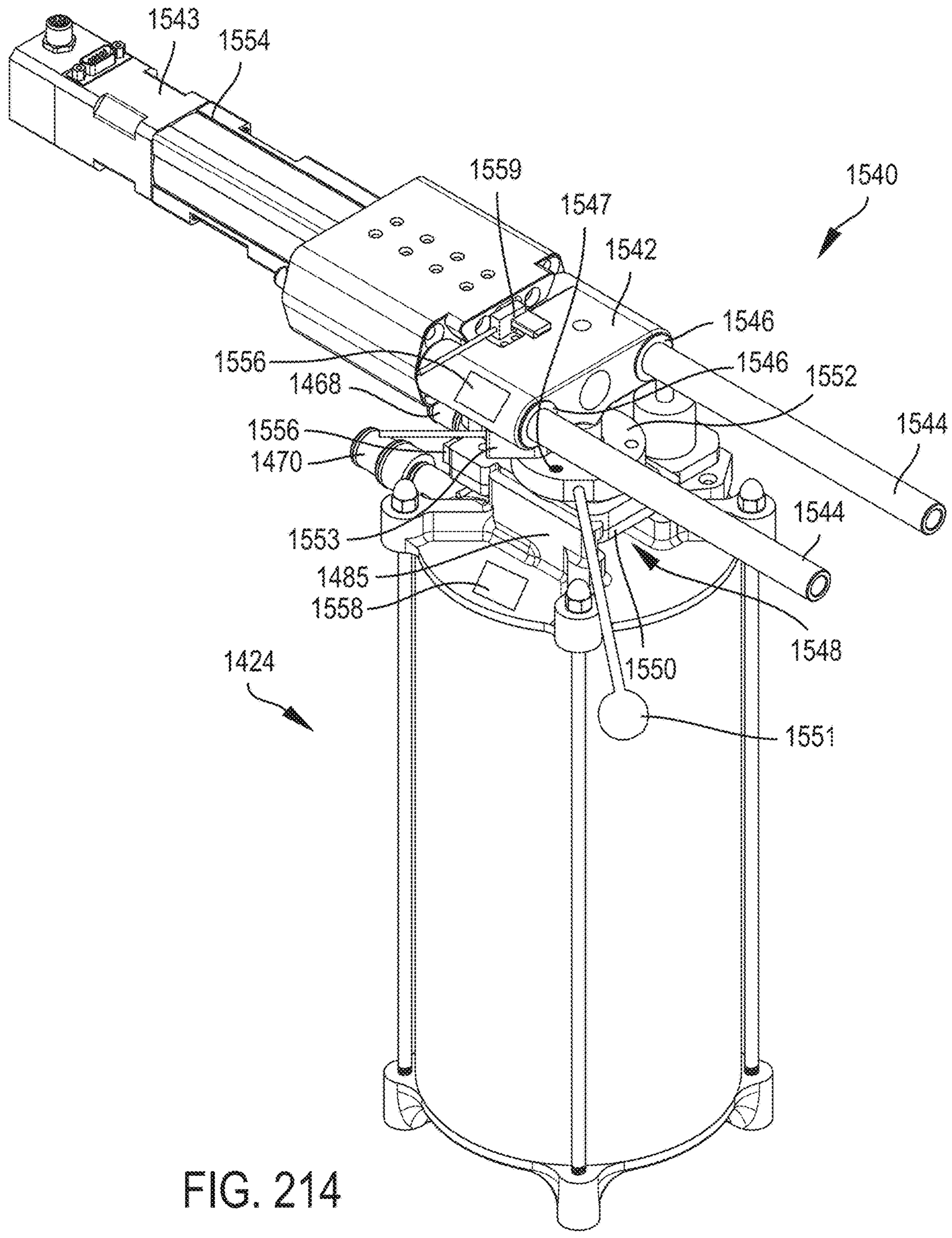
1543
1554
1559
1547
1540
1542
1546
1546
1552
1556
1468
1556
1470
1544
1544
1553
1485
1558
1548
1550
1424
1551

FIG. 214

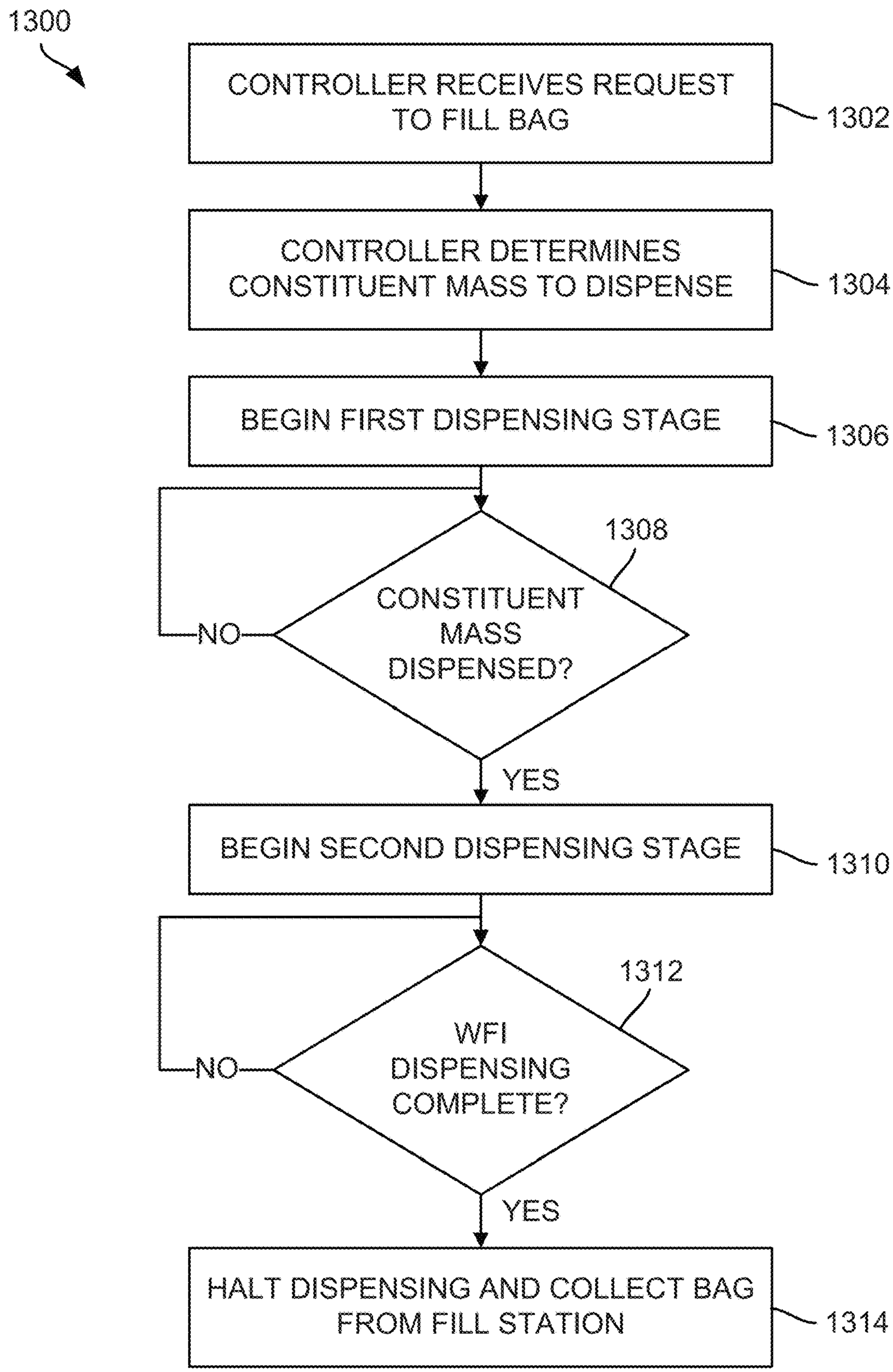
1300
CONTROLLER RECEIVES REQUEST TO FILL BAG
1302
CONTROLLER DETERMINES CONSTITUENT MASS TO DISPENSE
1304
BEGIN FIRST DISPENSING STAGE
1306
1308
CONSTITUENT MASS DISPENSED?
NO
YES
BEGIN SECOND DISPENSING STAGE
1310
1312
WFI DISPENSING COMPLETE?
NO
YES
HALT DISPENSING AND COLLECT BAG FROM FILL STATION
1314

FIG. 215

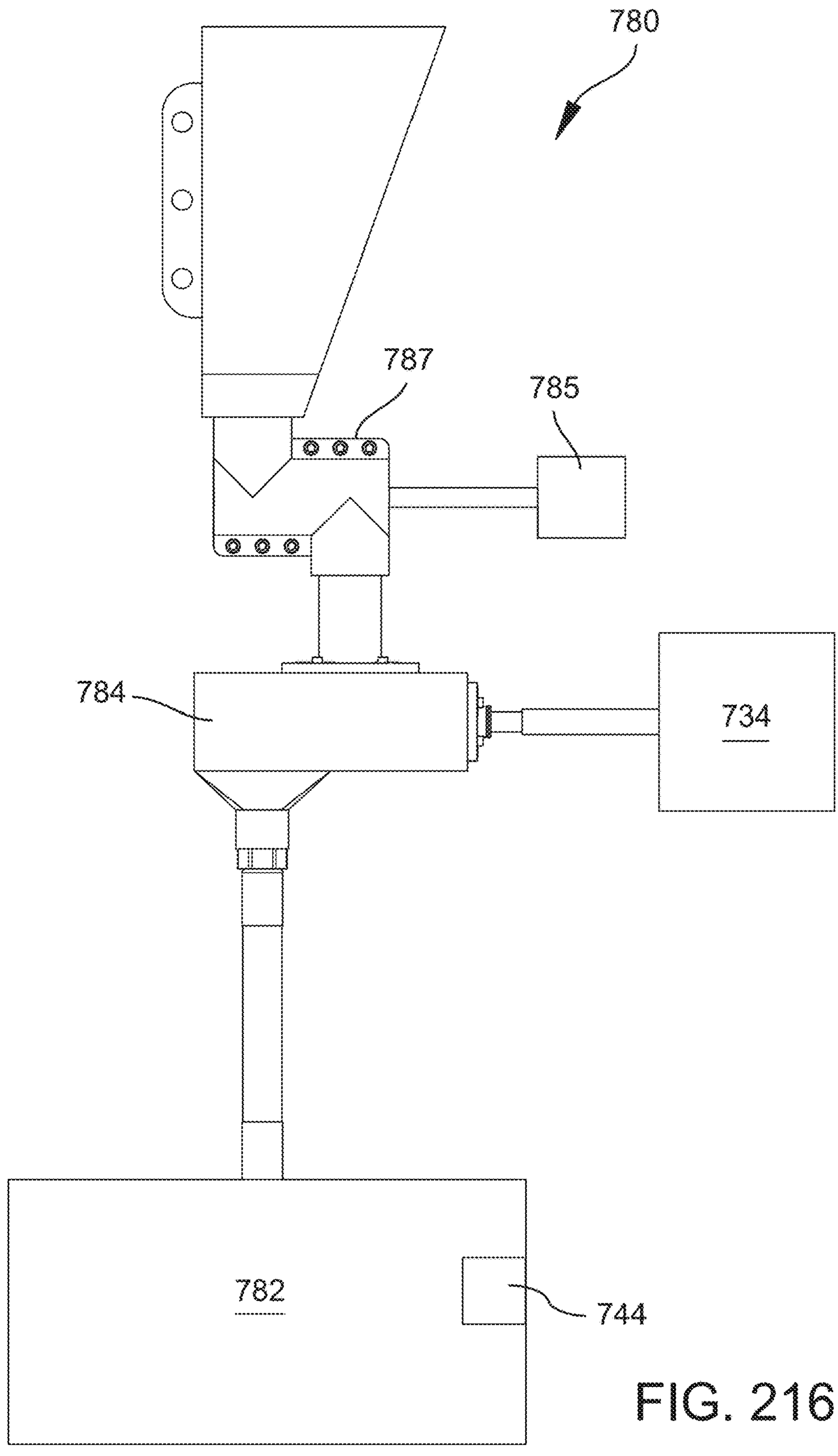

FIG. 216

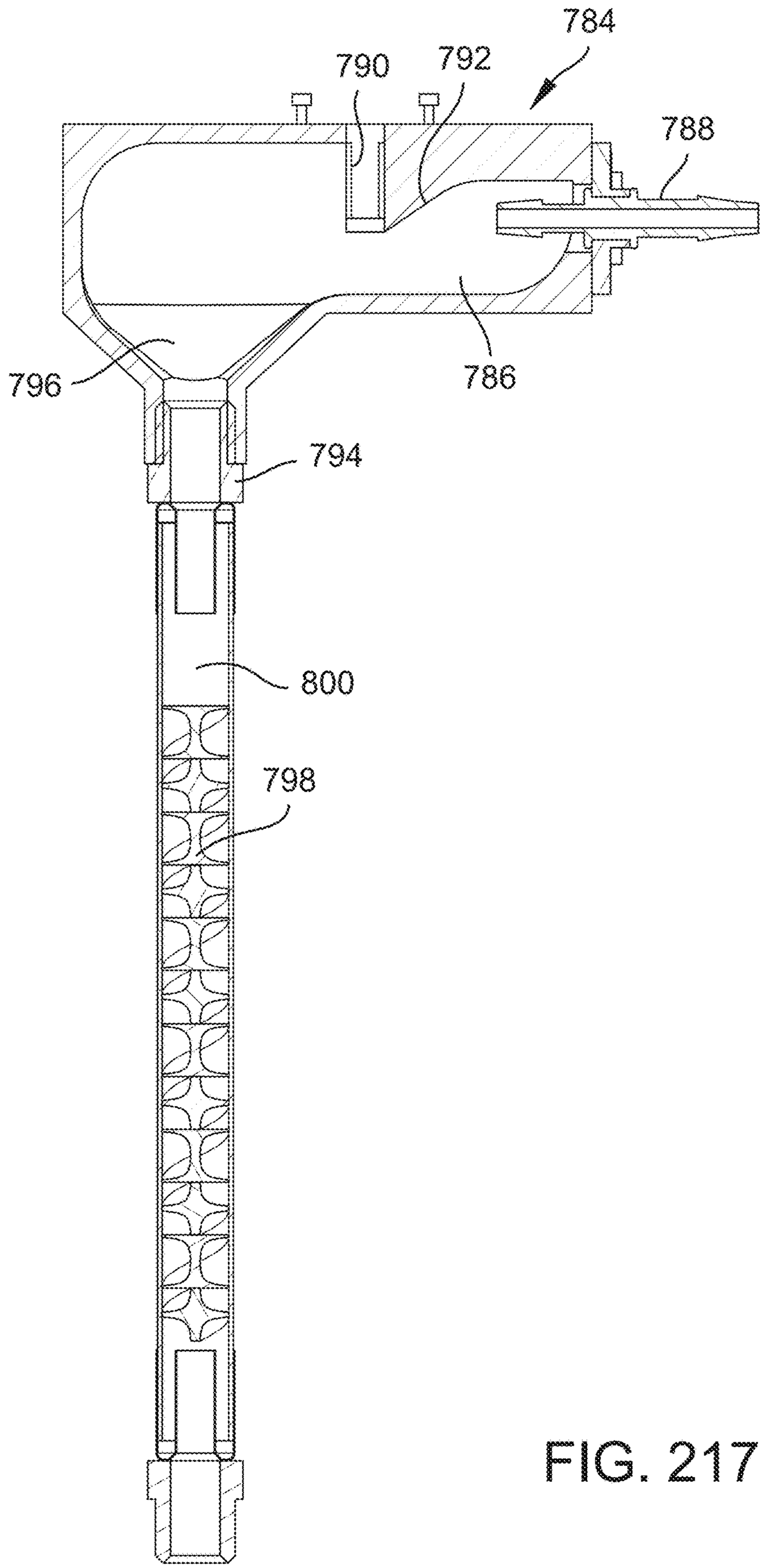

FIG. 217

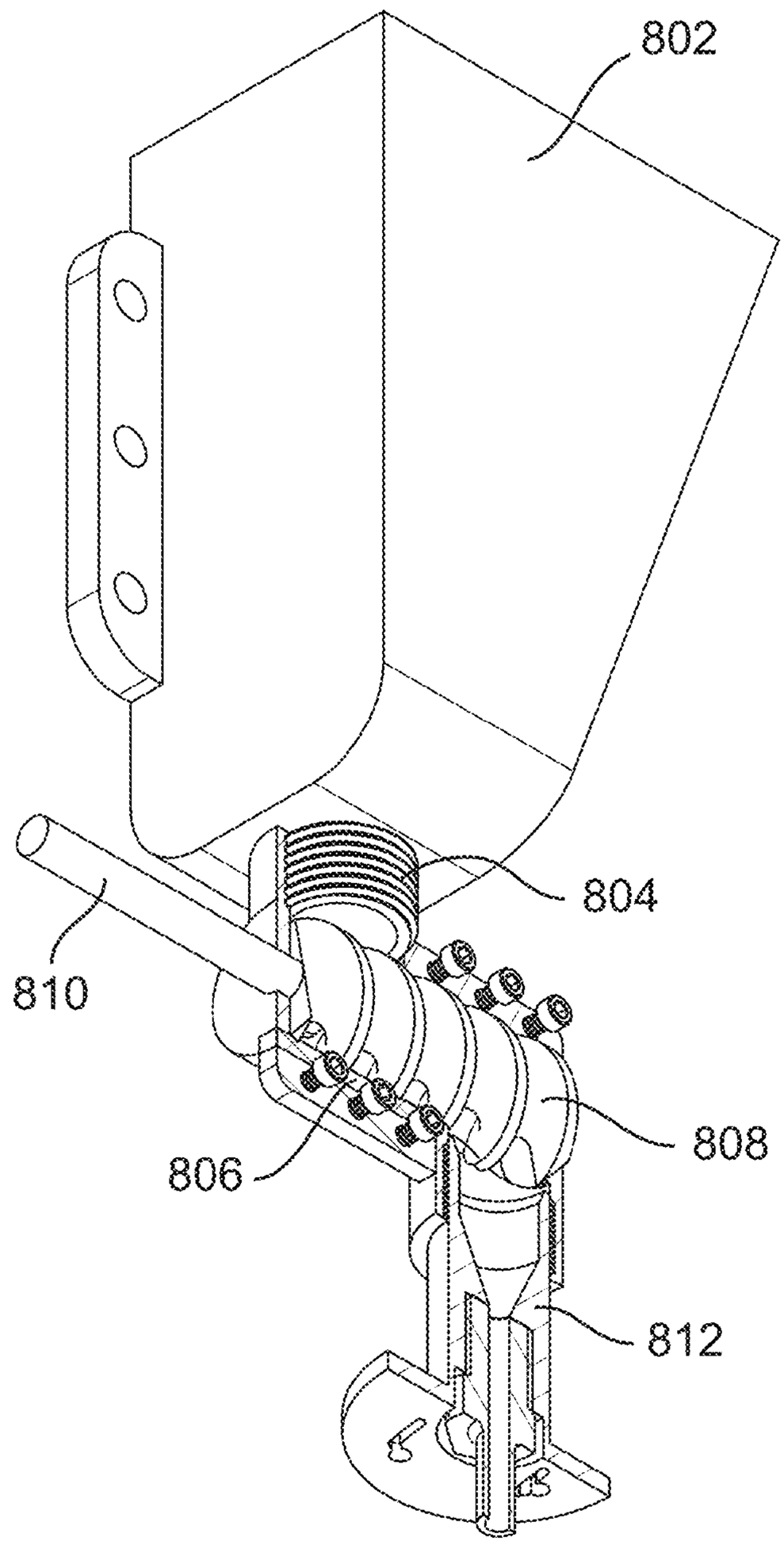

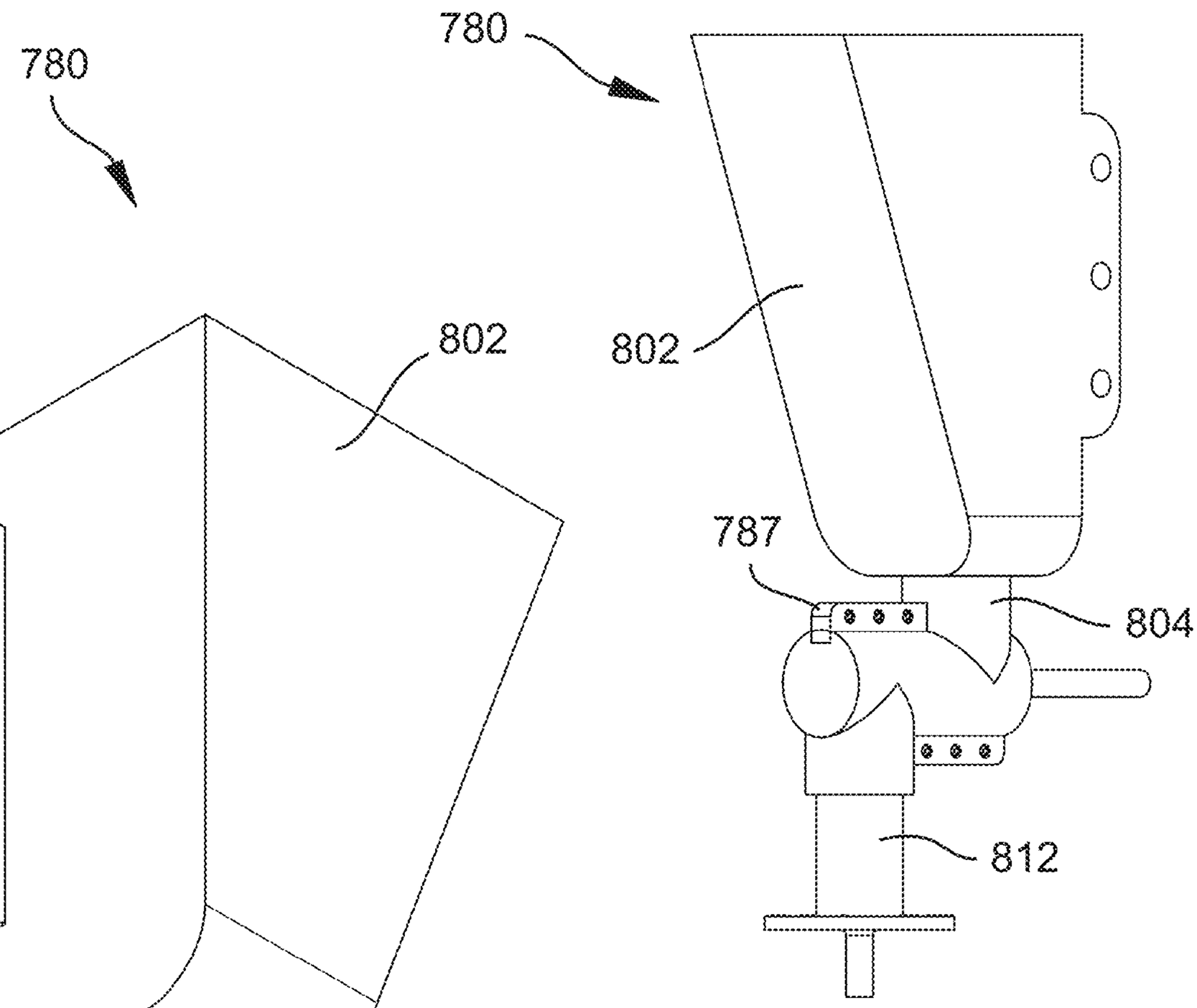

FIG. 218

FIG. 219

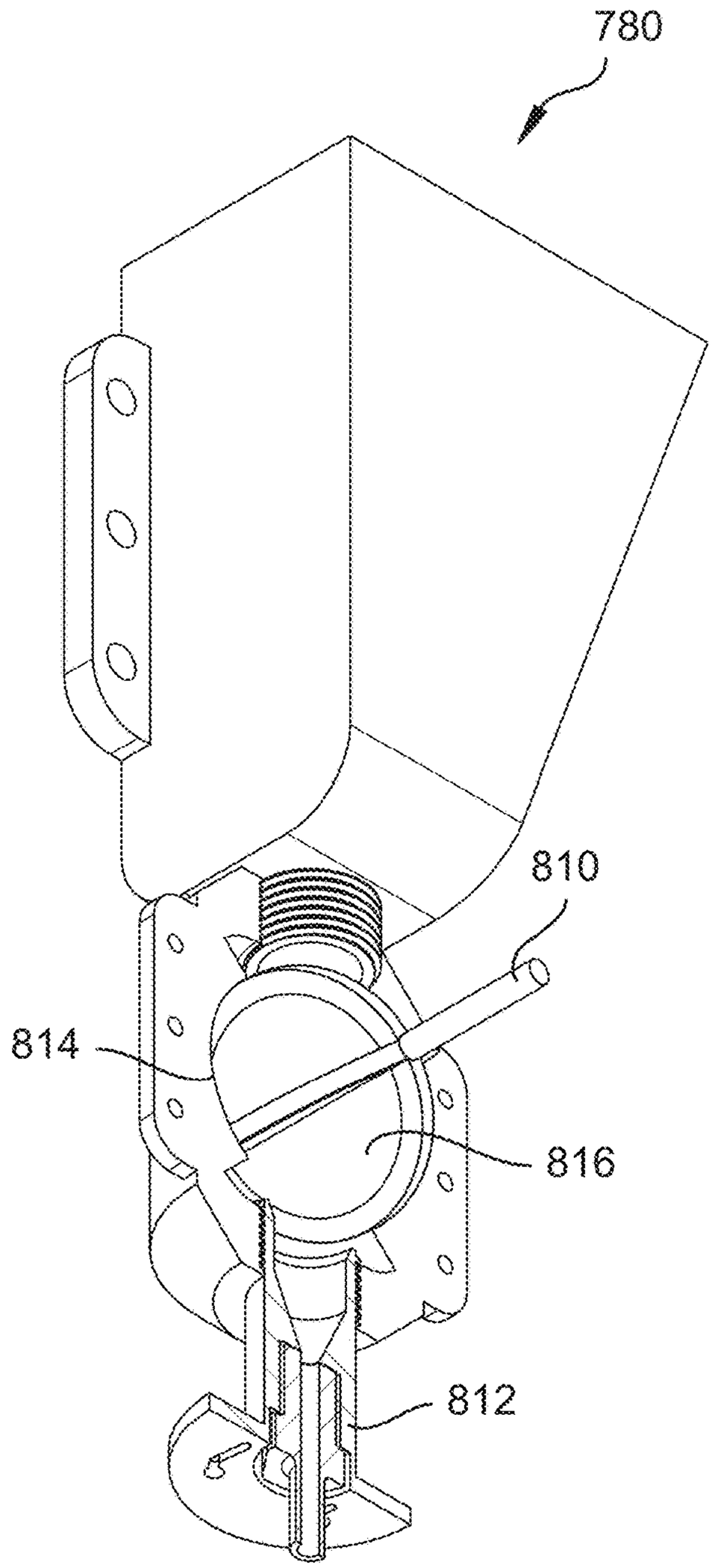

FIG. 221

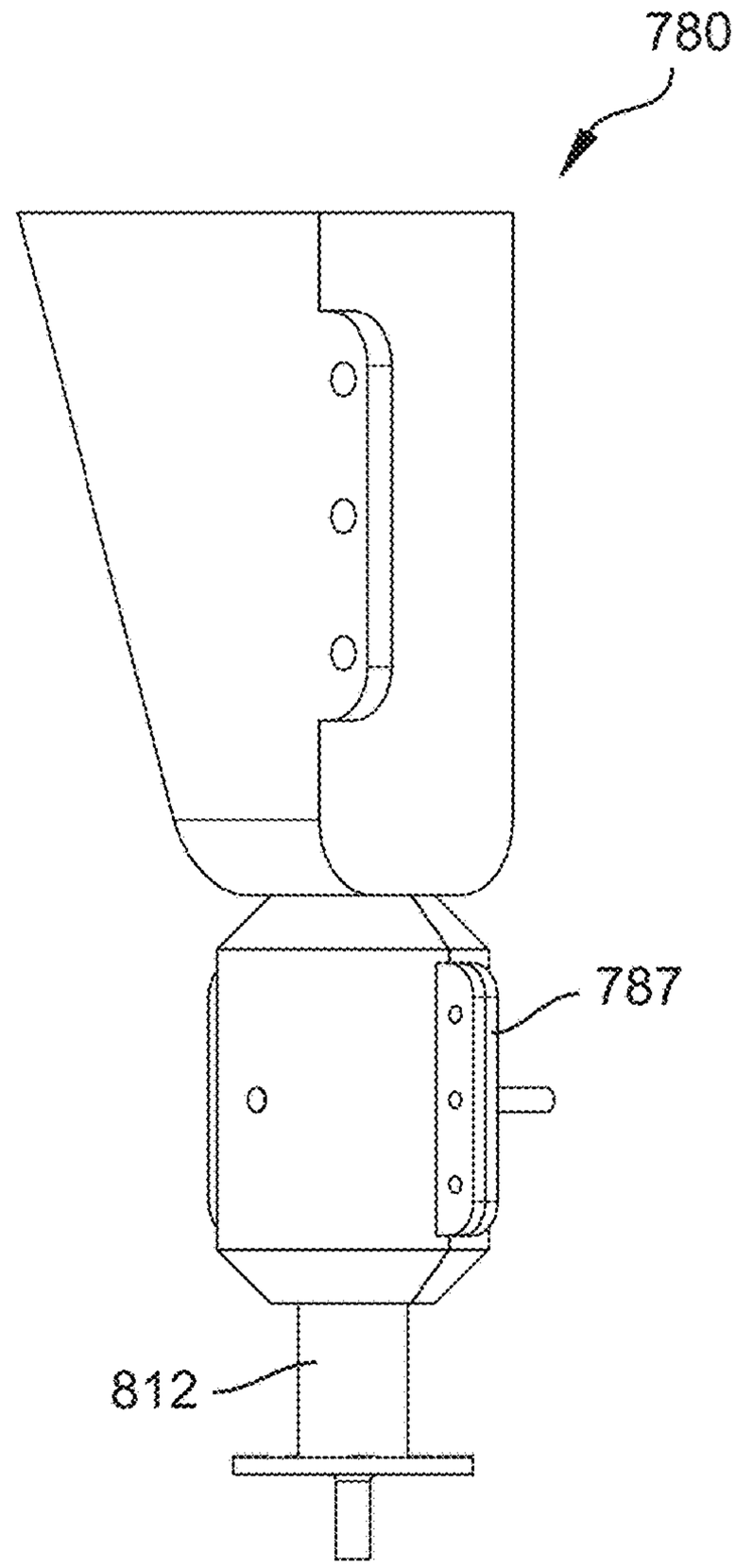

FIG. 220

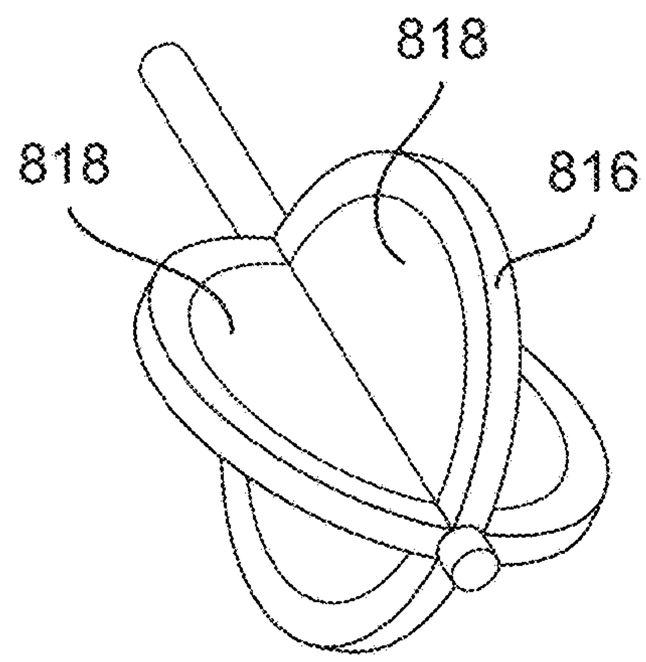

FIG. 222

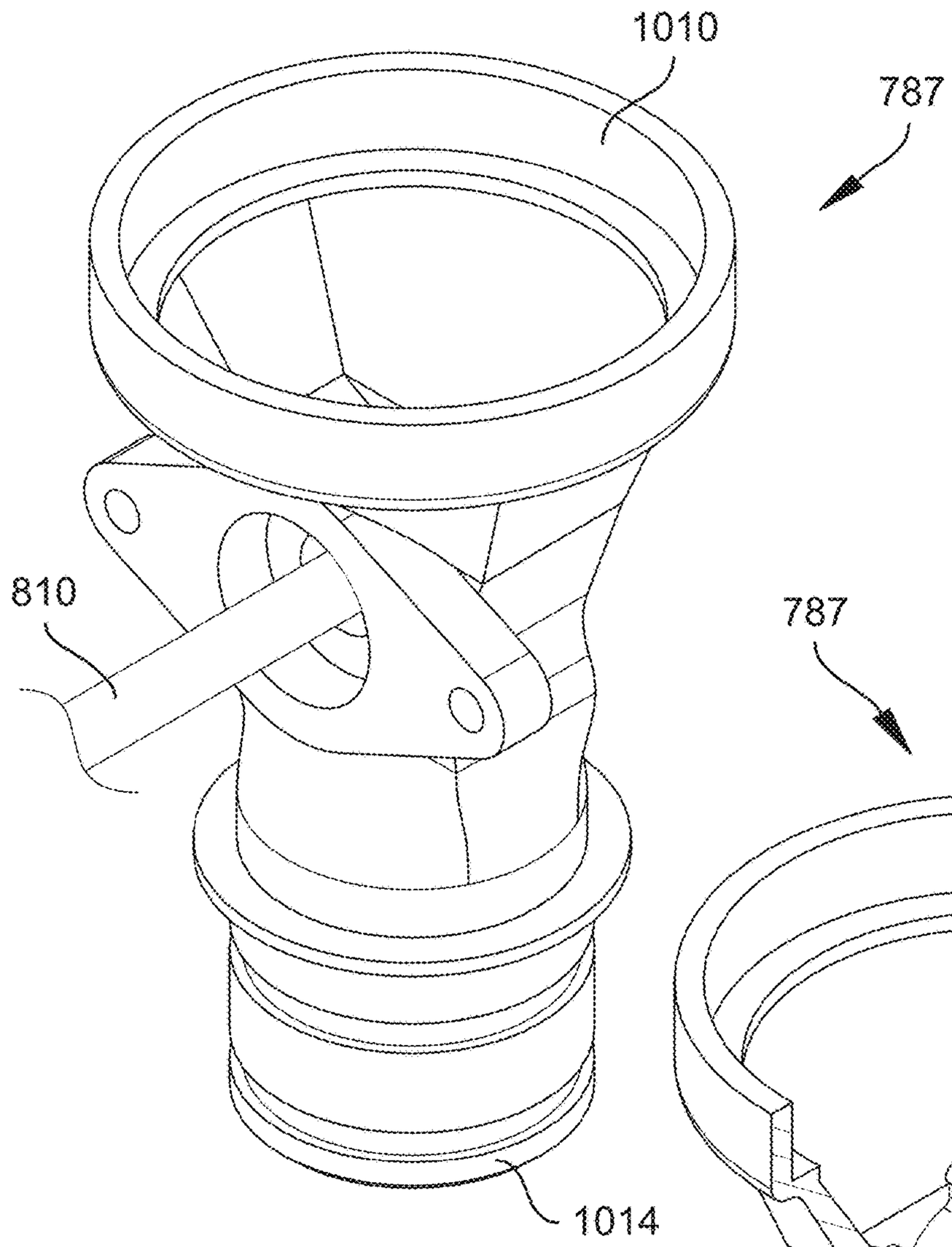

FIG. 223

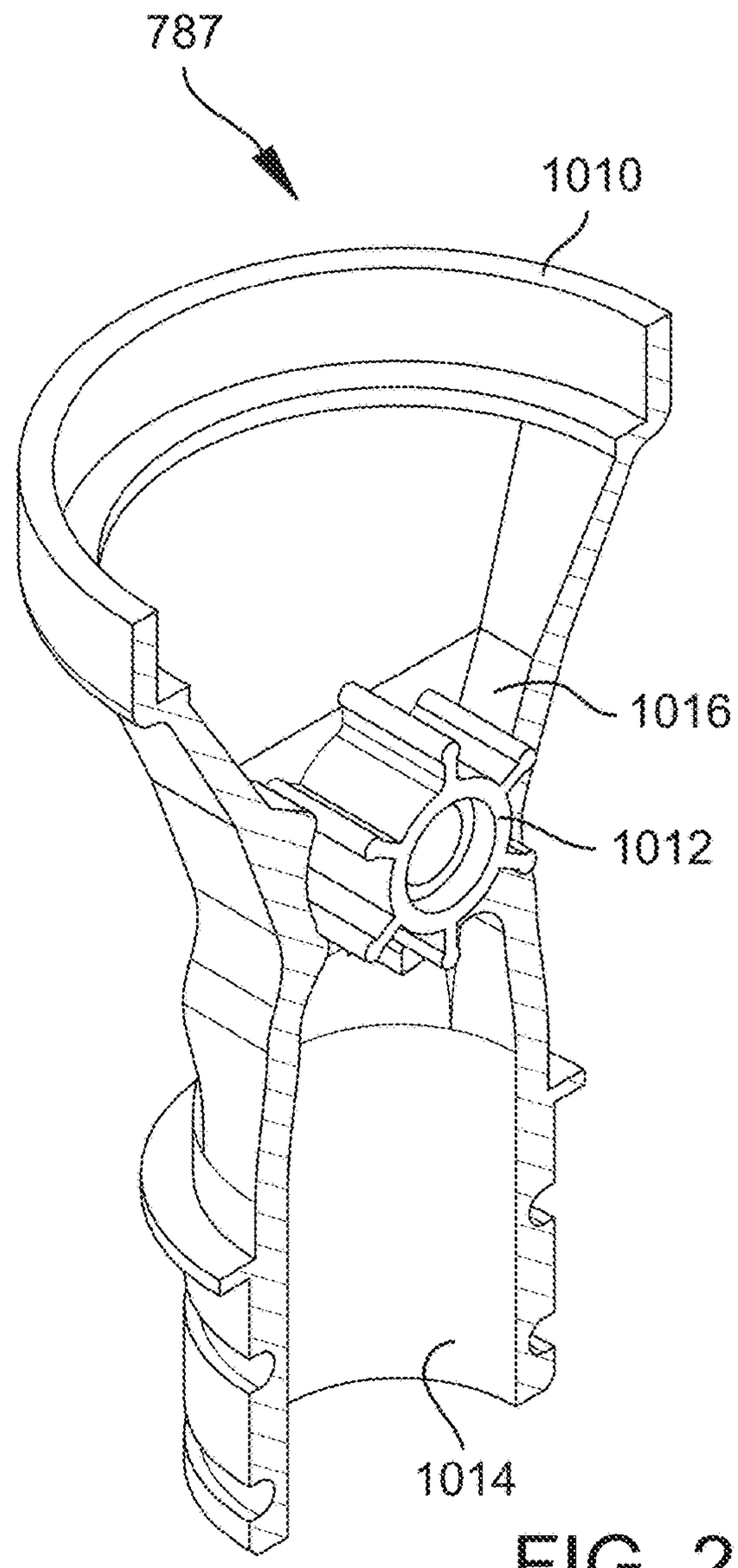

FIG. 224

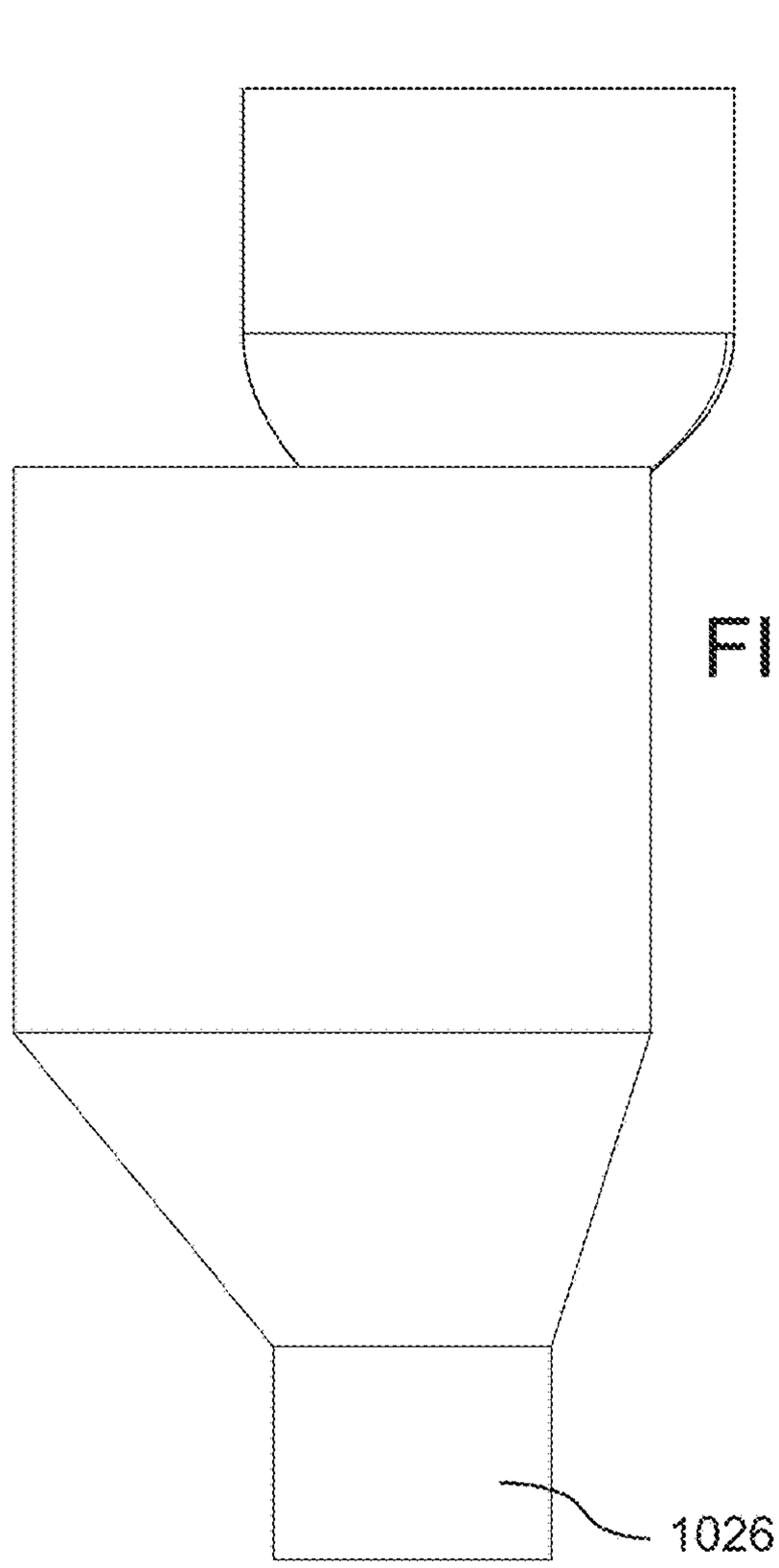

FIG. 225

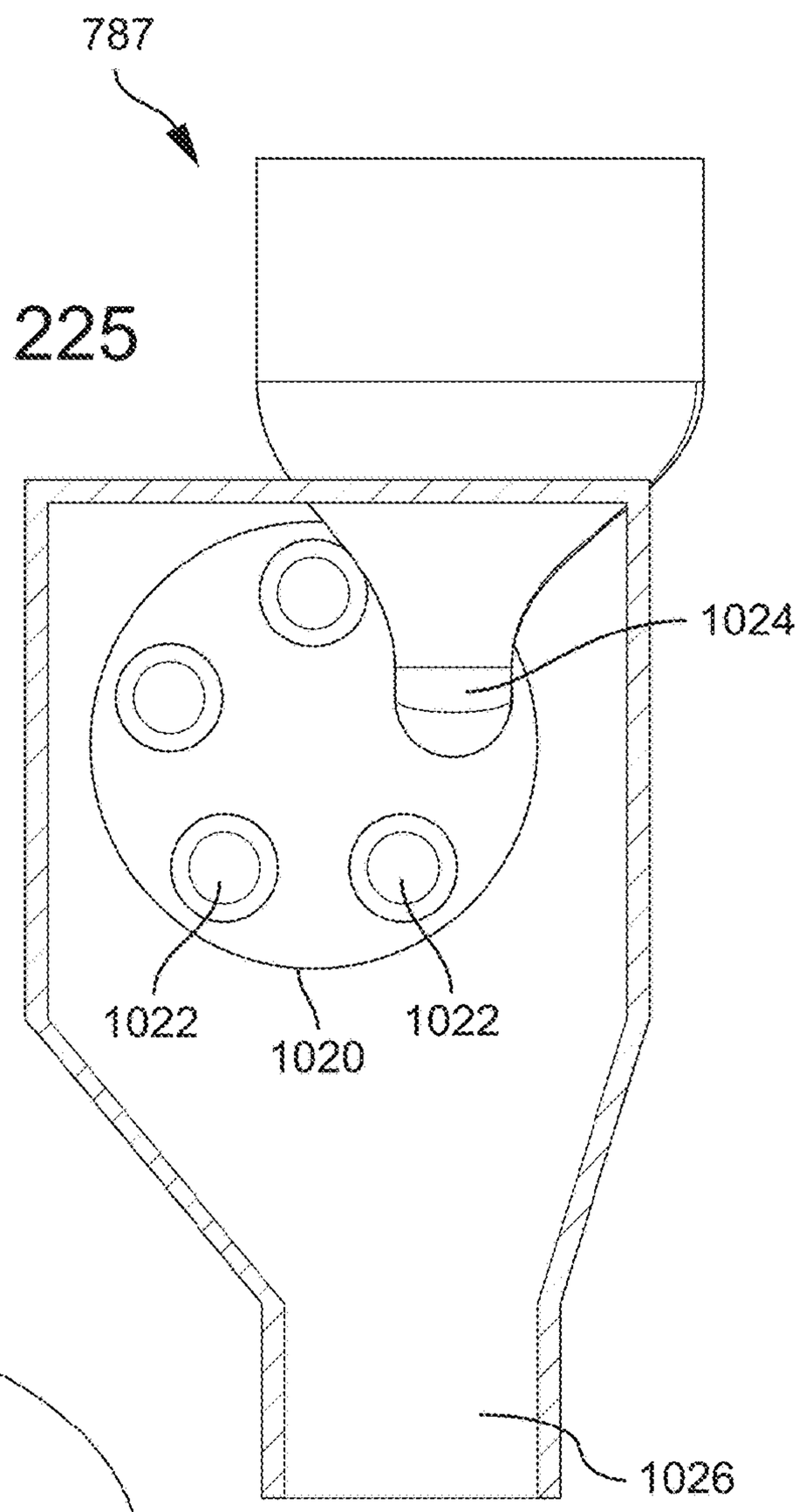

FIG. 226

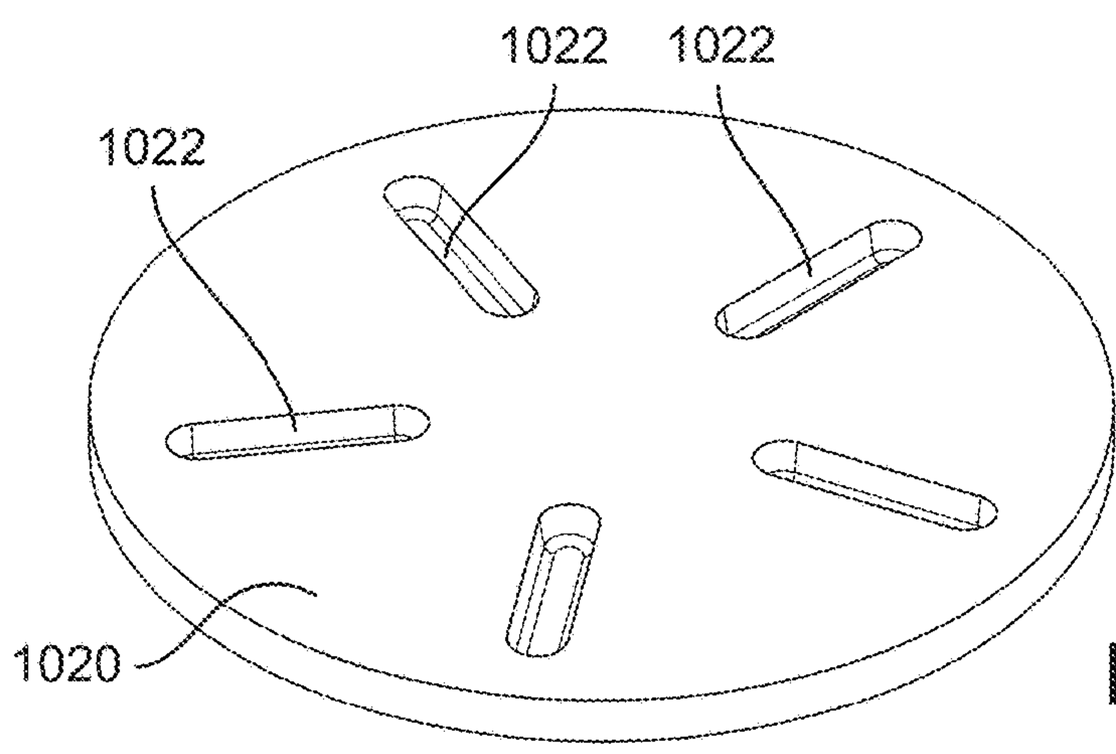

FIG. 227

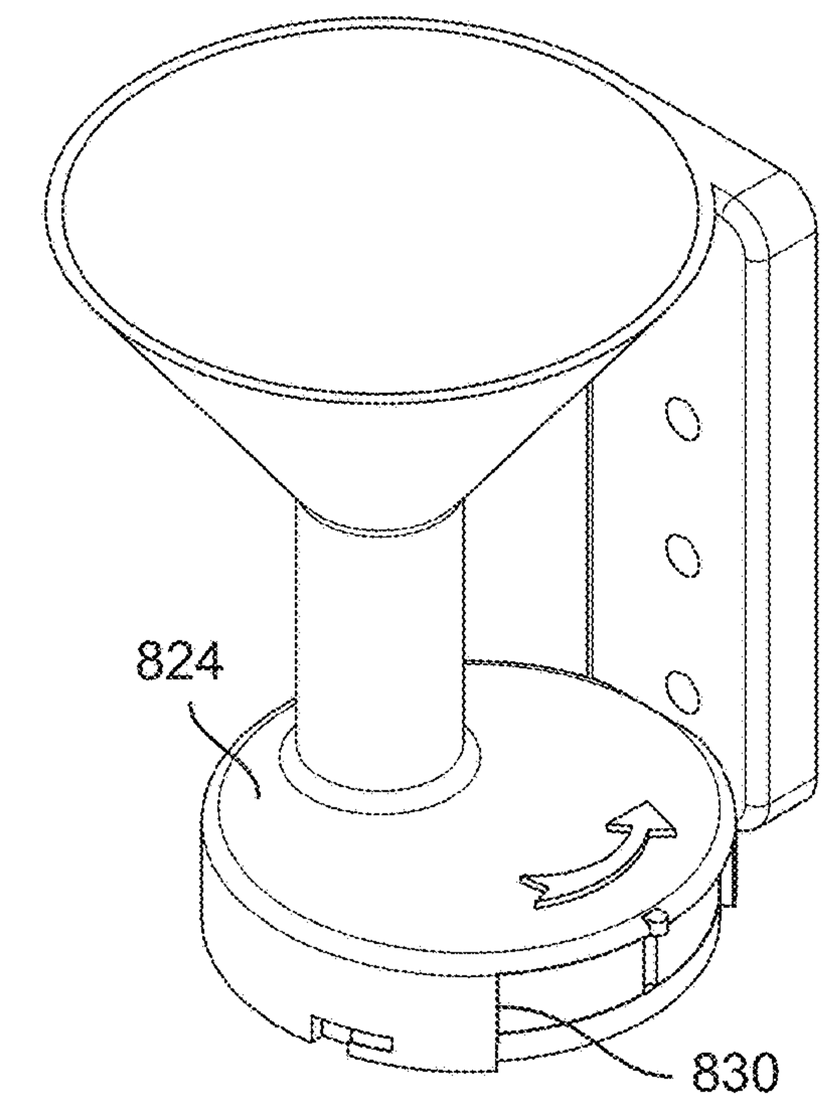

FIG. 228A

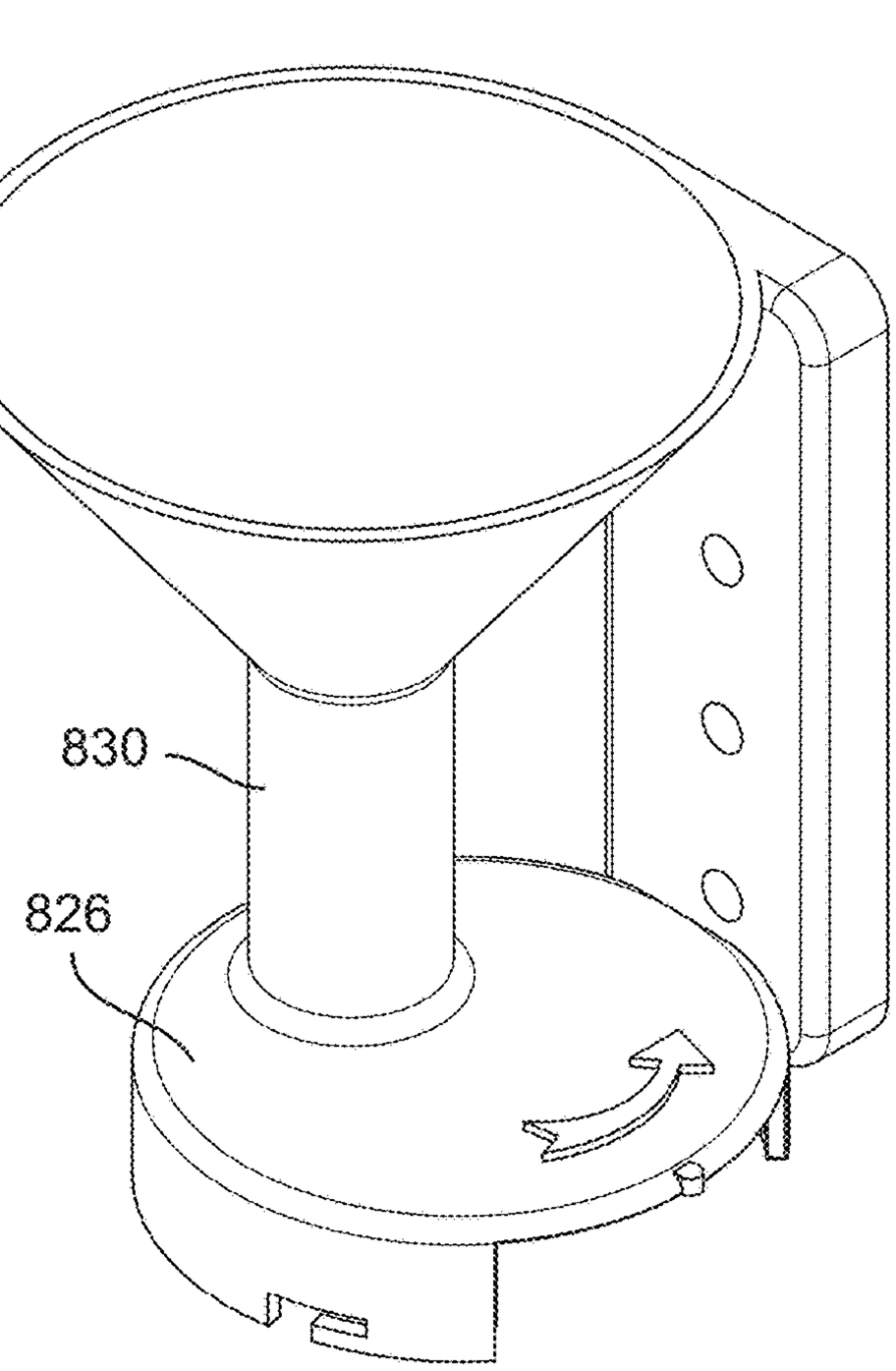

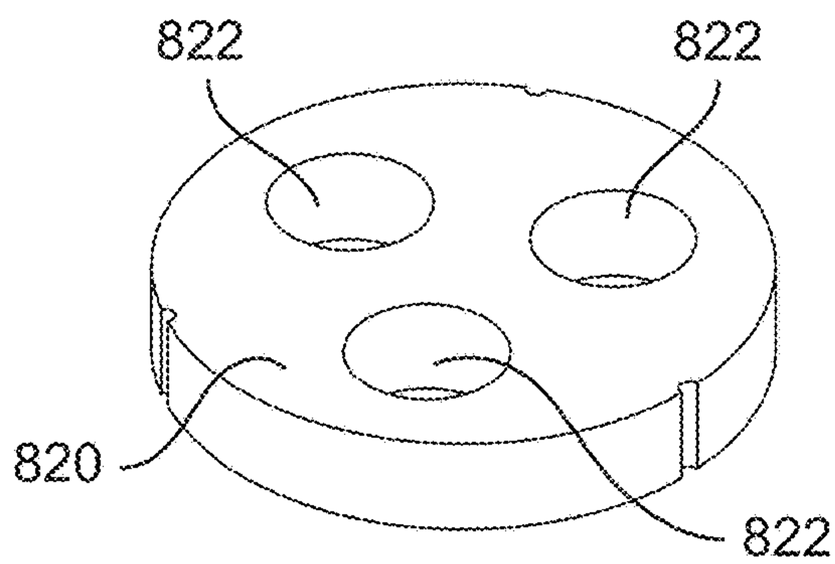

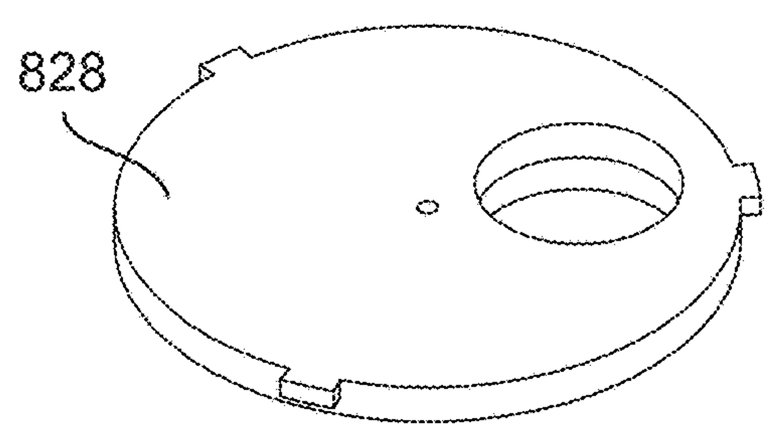

FIG. 228B

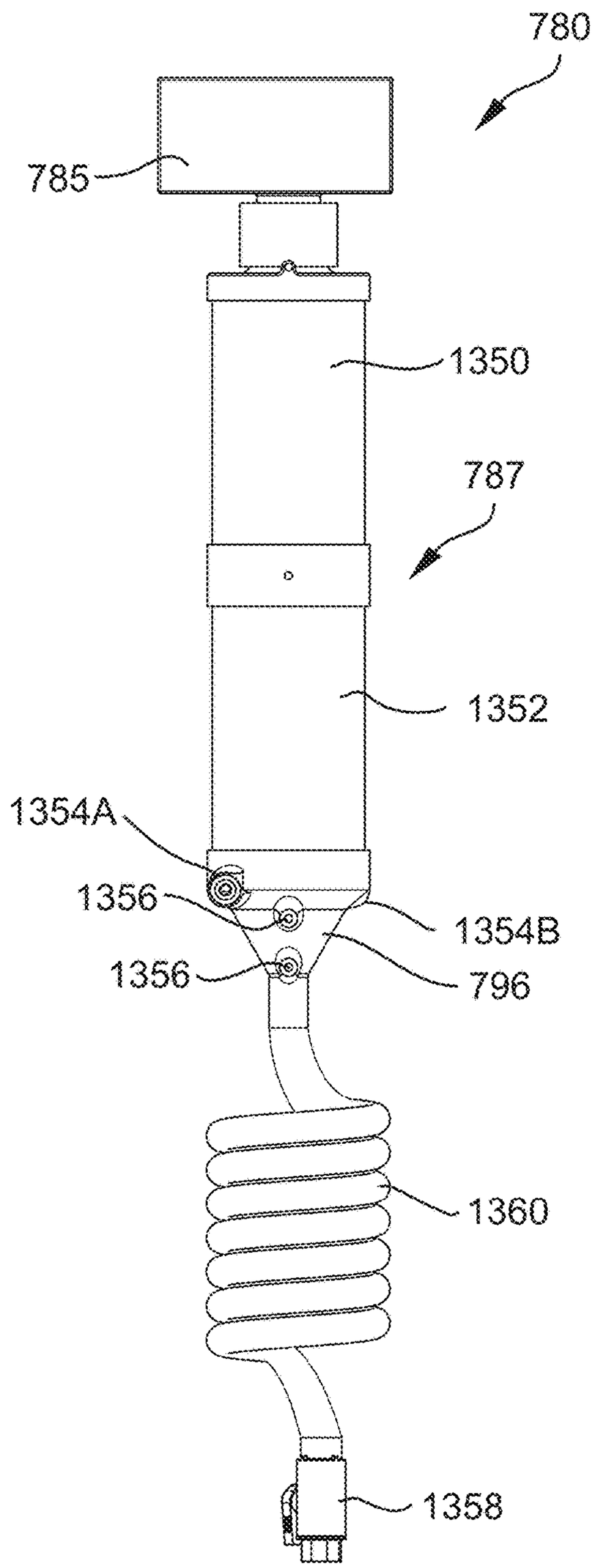

FIG. 229A

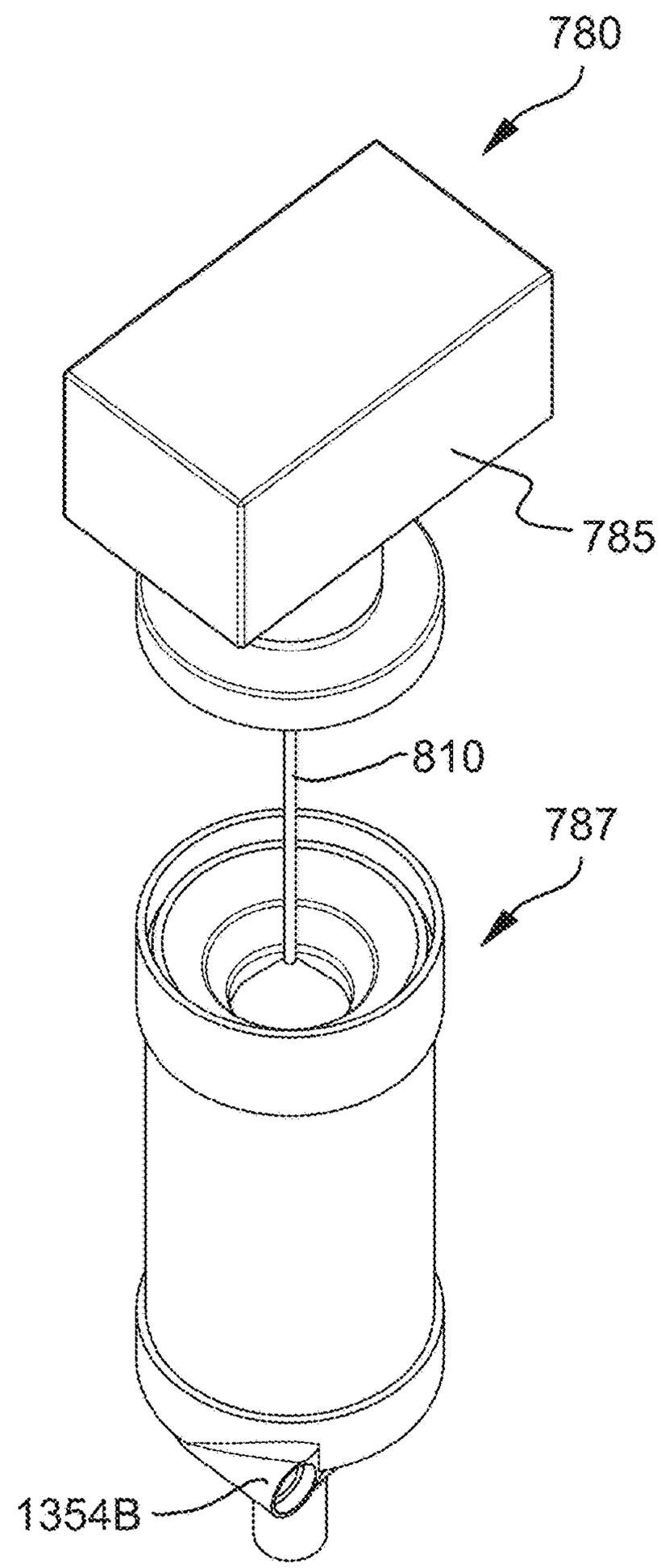

FIG. 229B

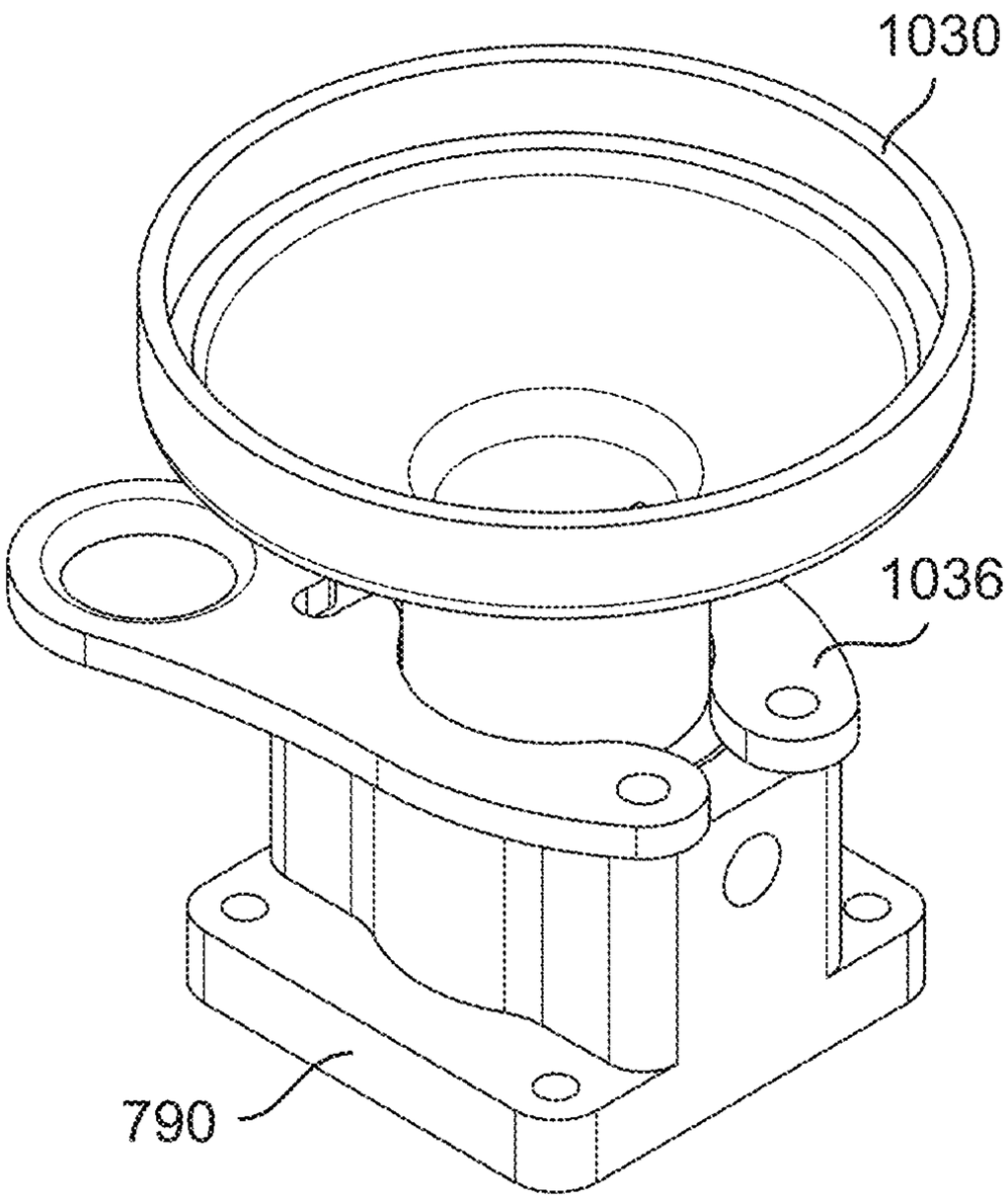

FIG. 230

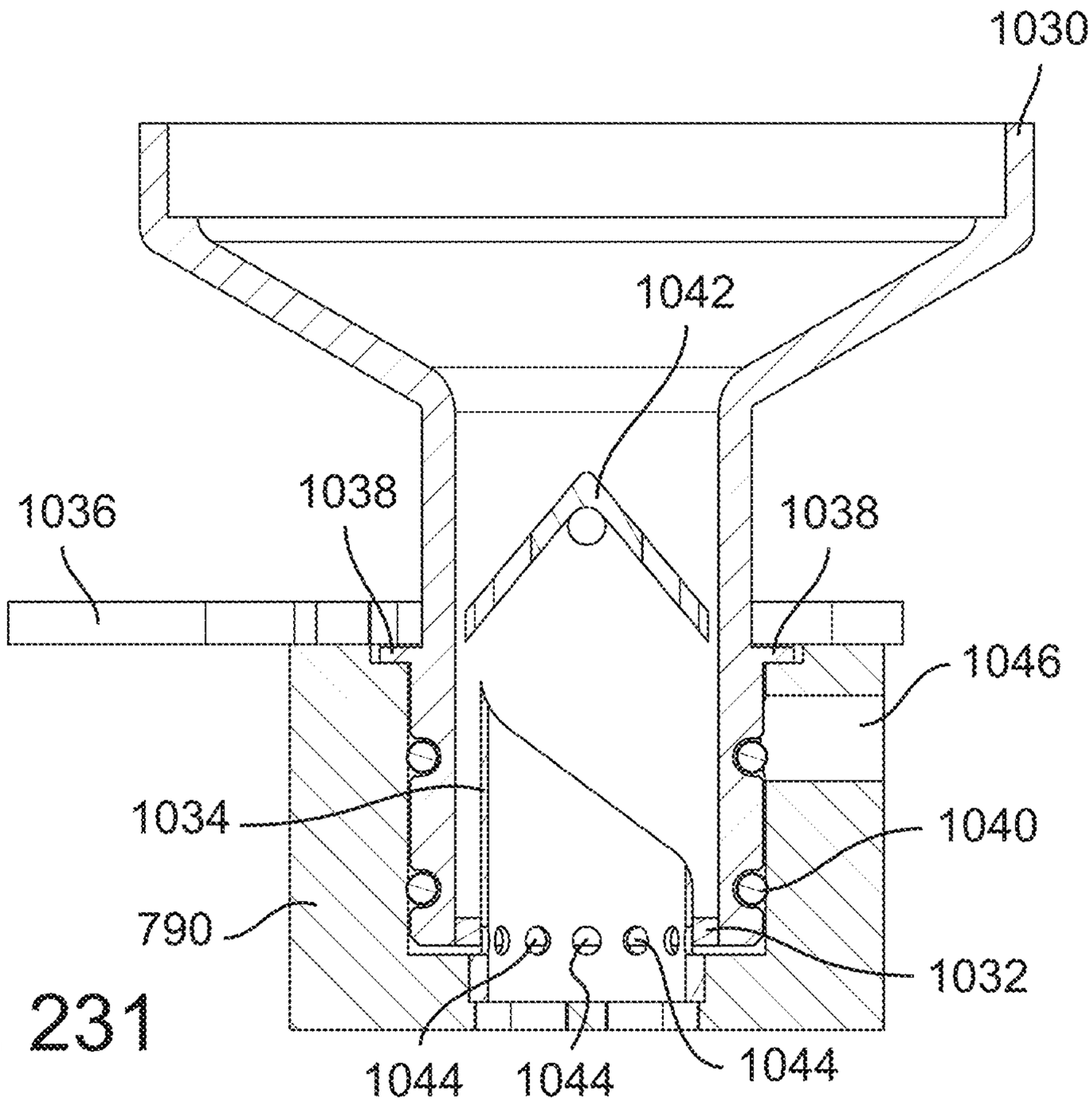

FIG. 231

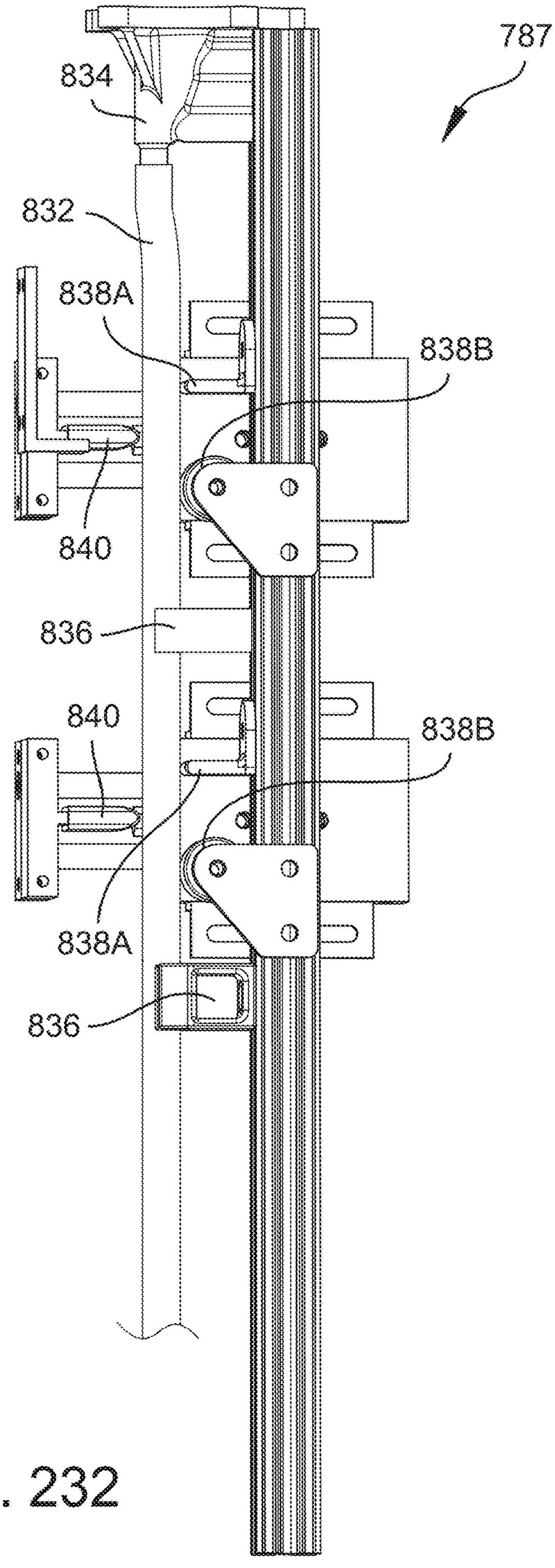

FIG. 232

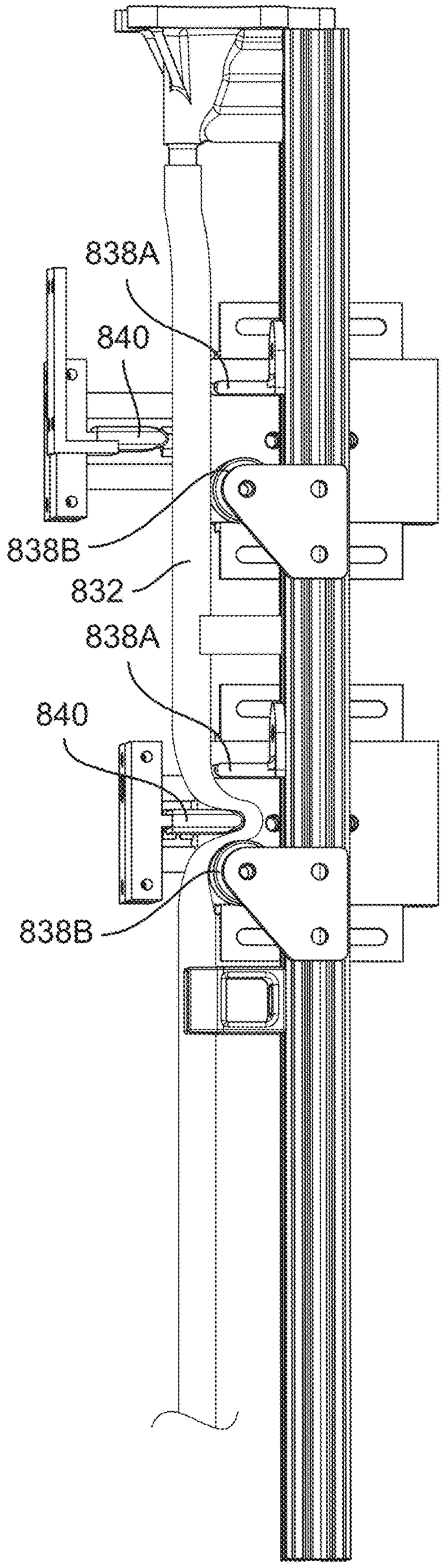

FIG. 233

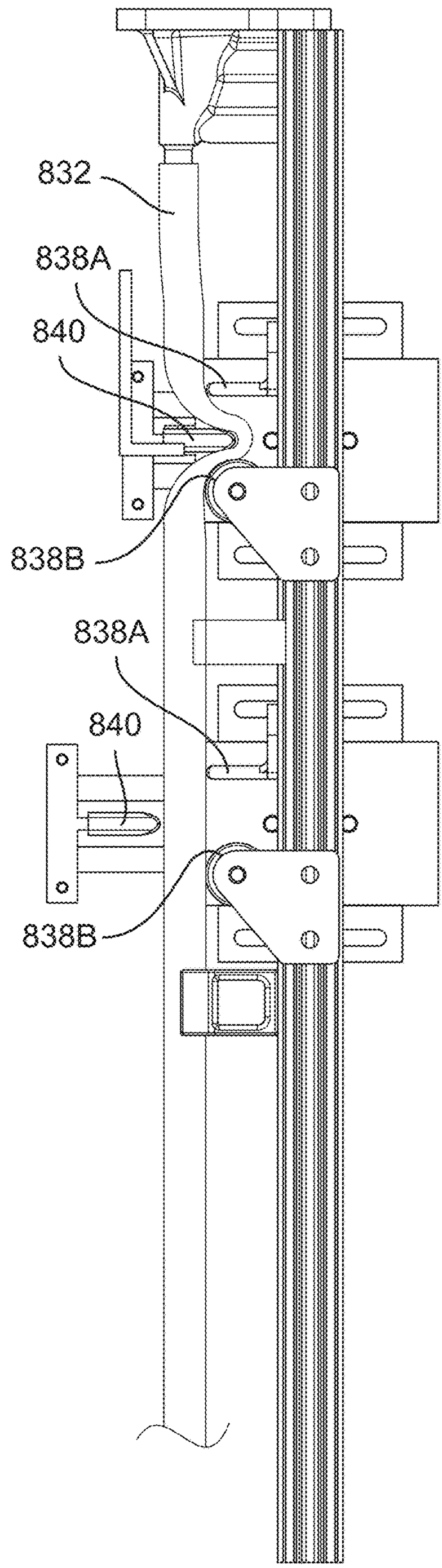

FIG. 234

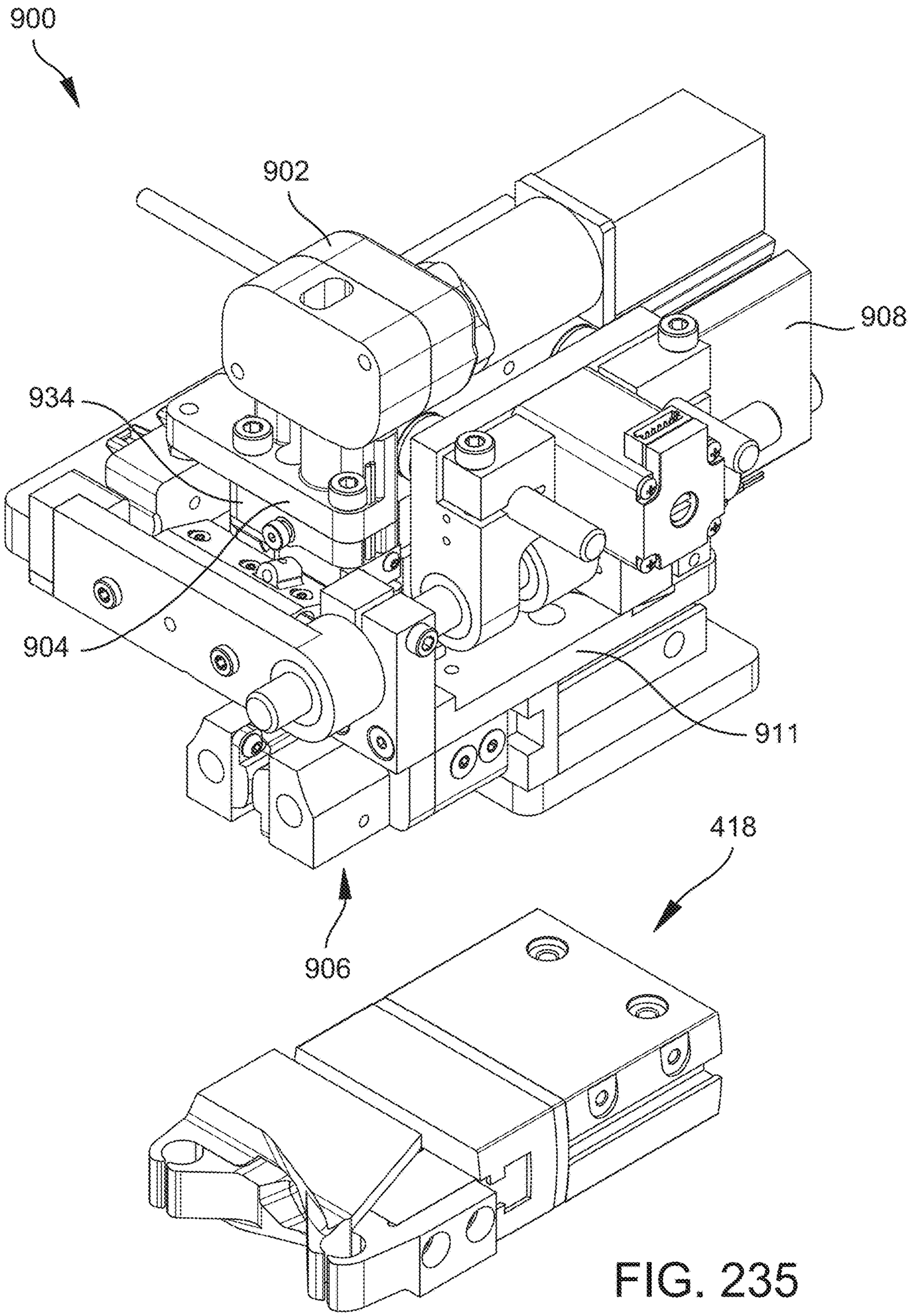

FIG. 235

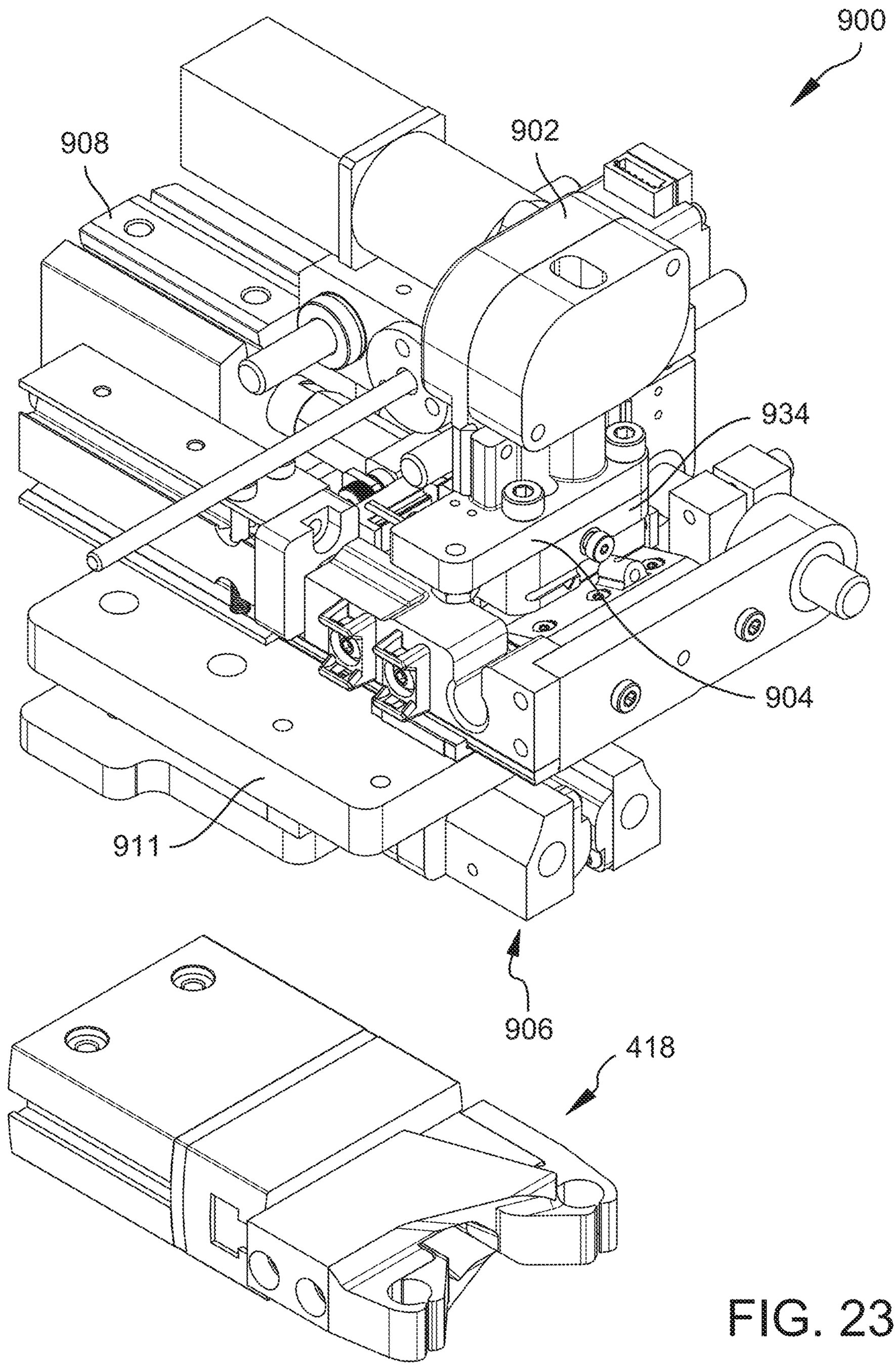

FIG. 236

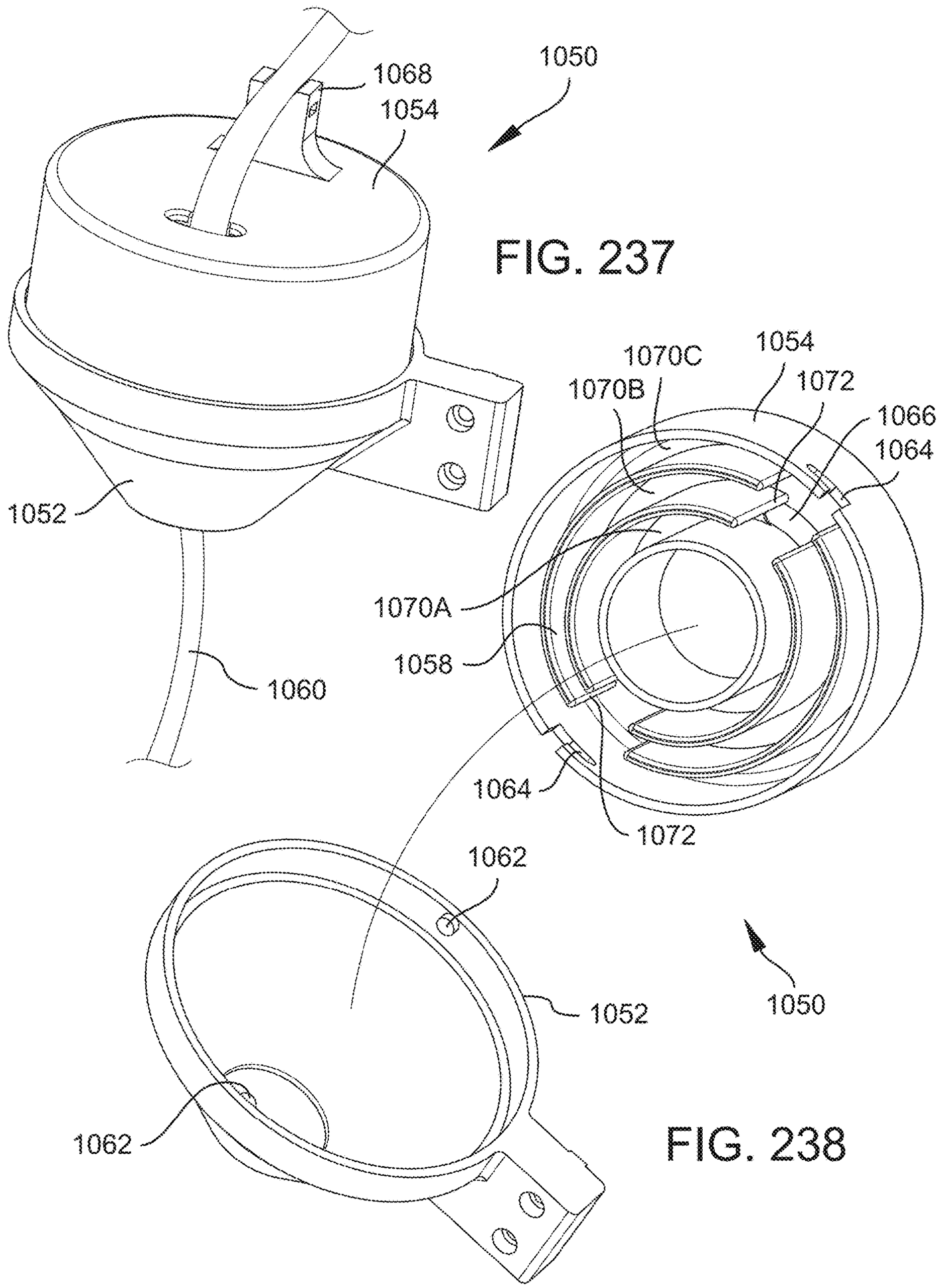

FIG. 237

FIG. 238

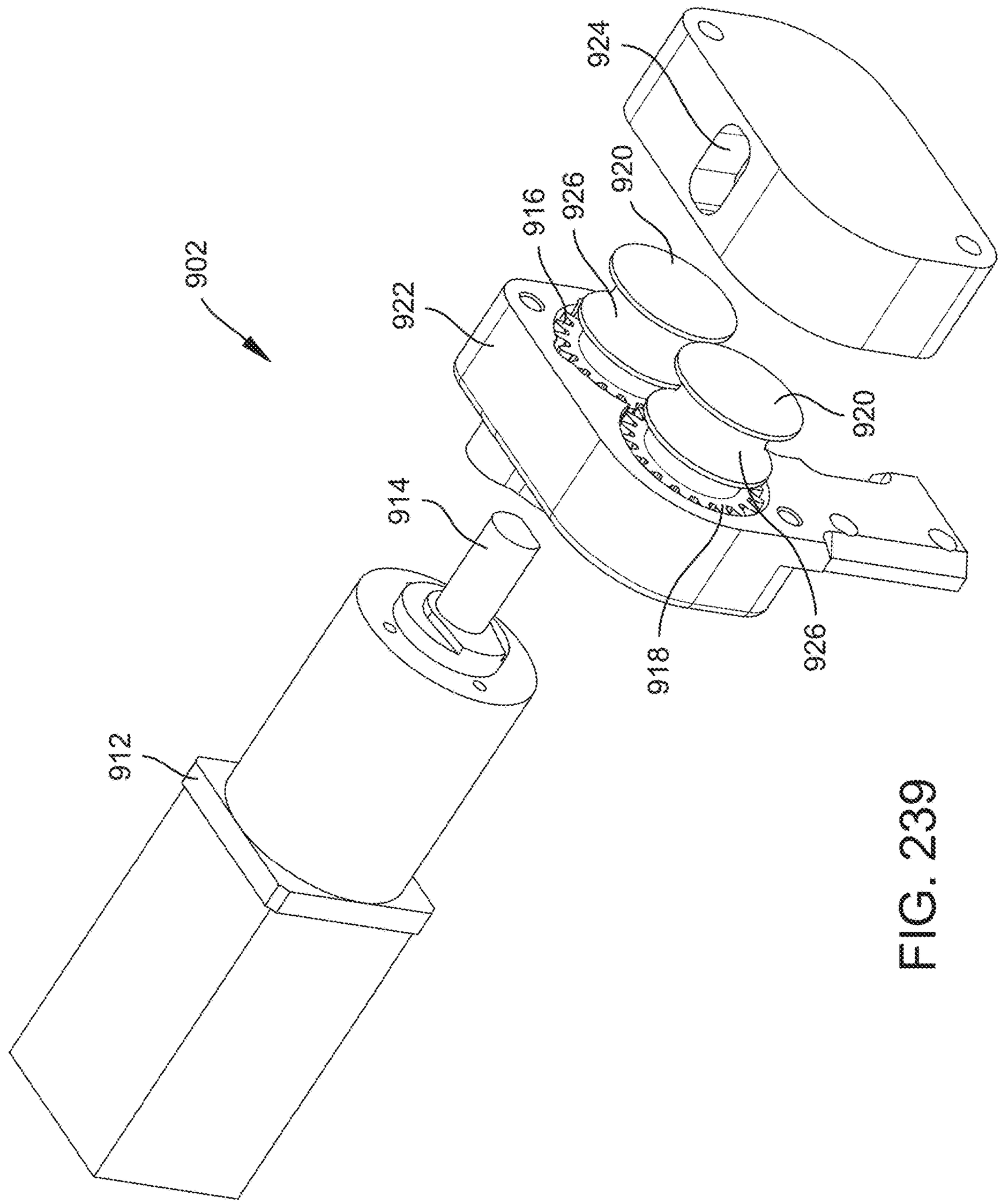

FIG. 239

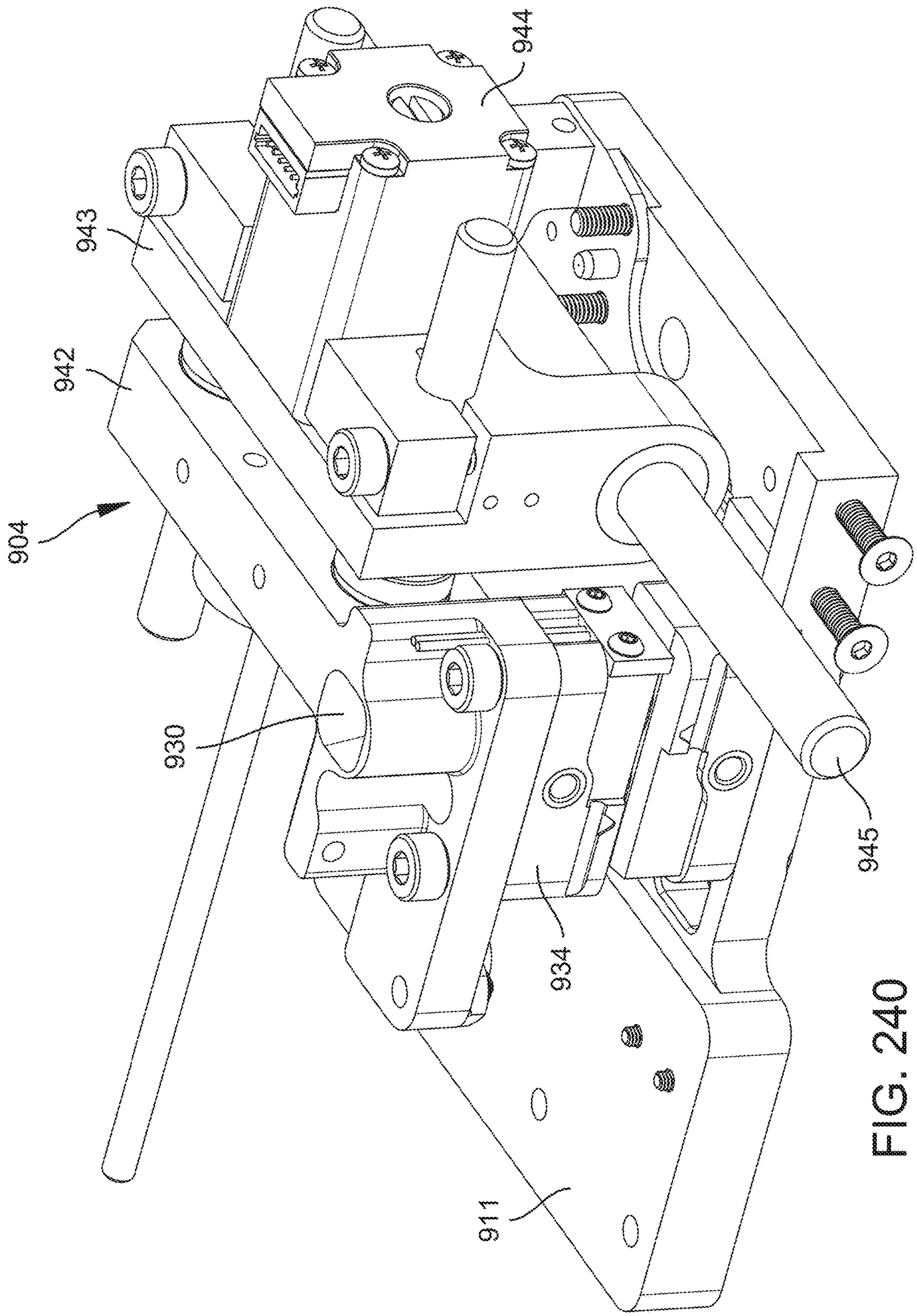

FIG. 240

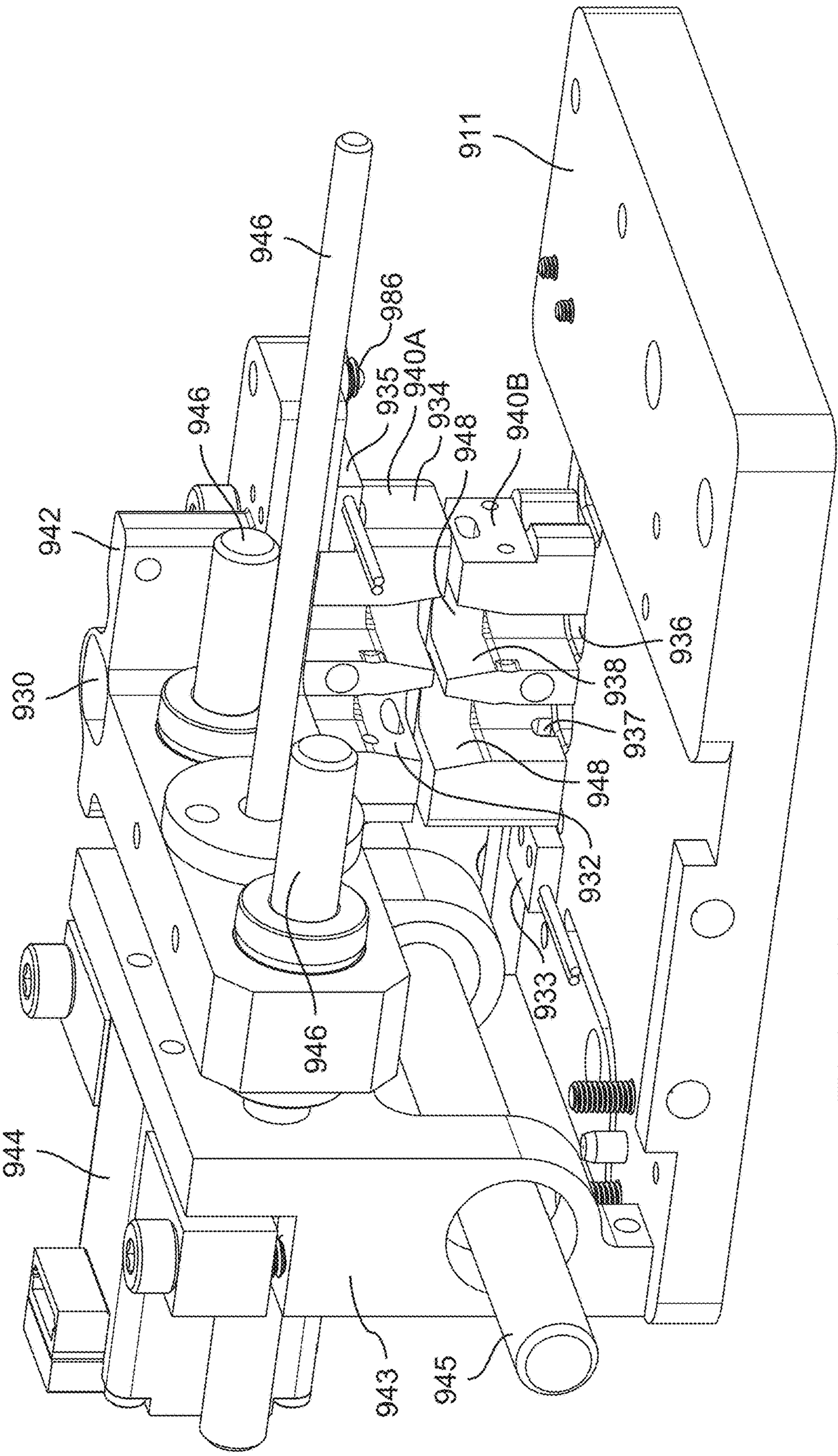
911
946
986
935
940A
934
948
940B
946
942
930
936
938
937
948
932
933
946
944
943
945

FIG. 241

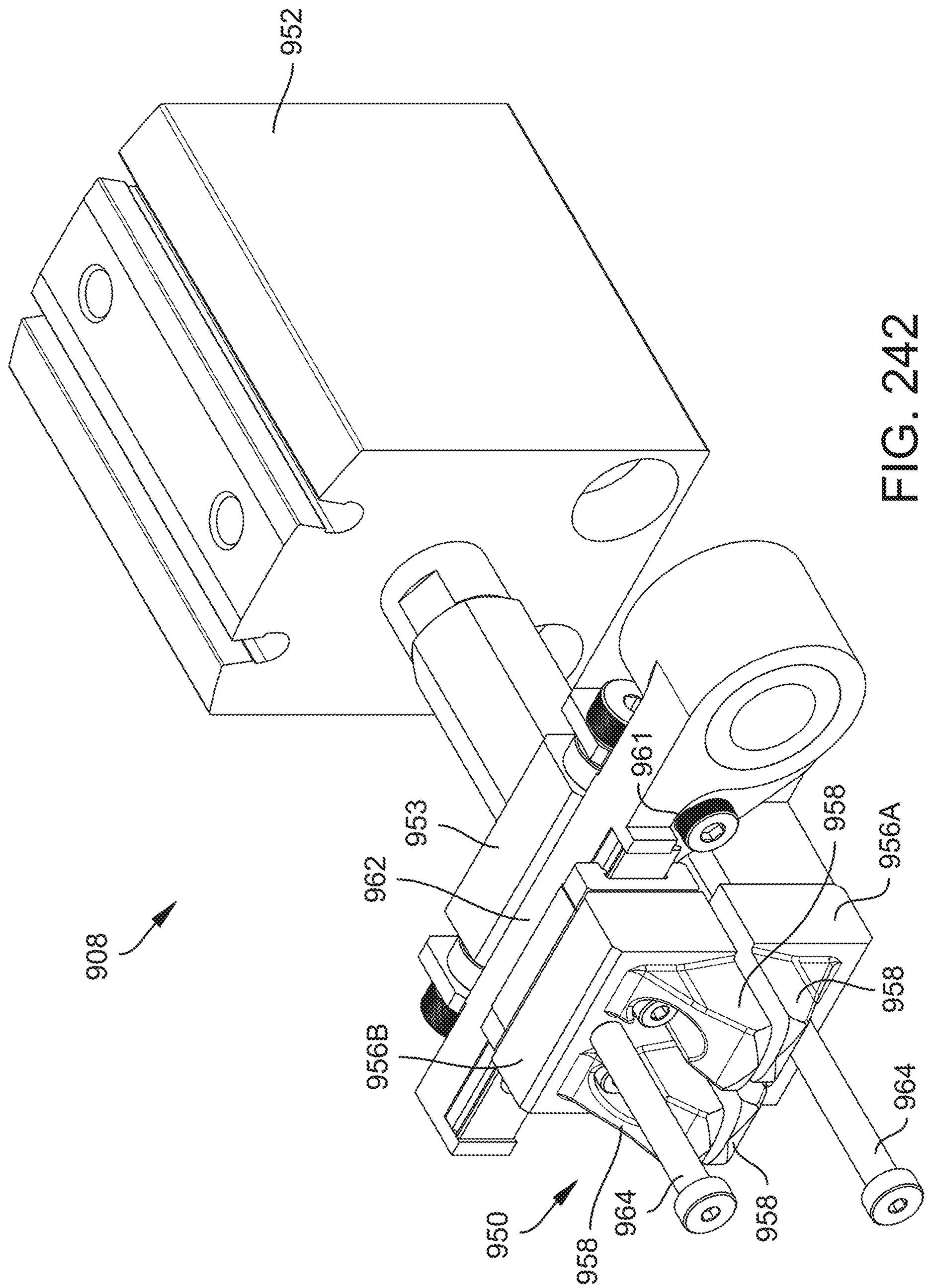

FIG. 242

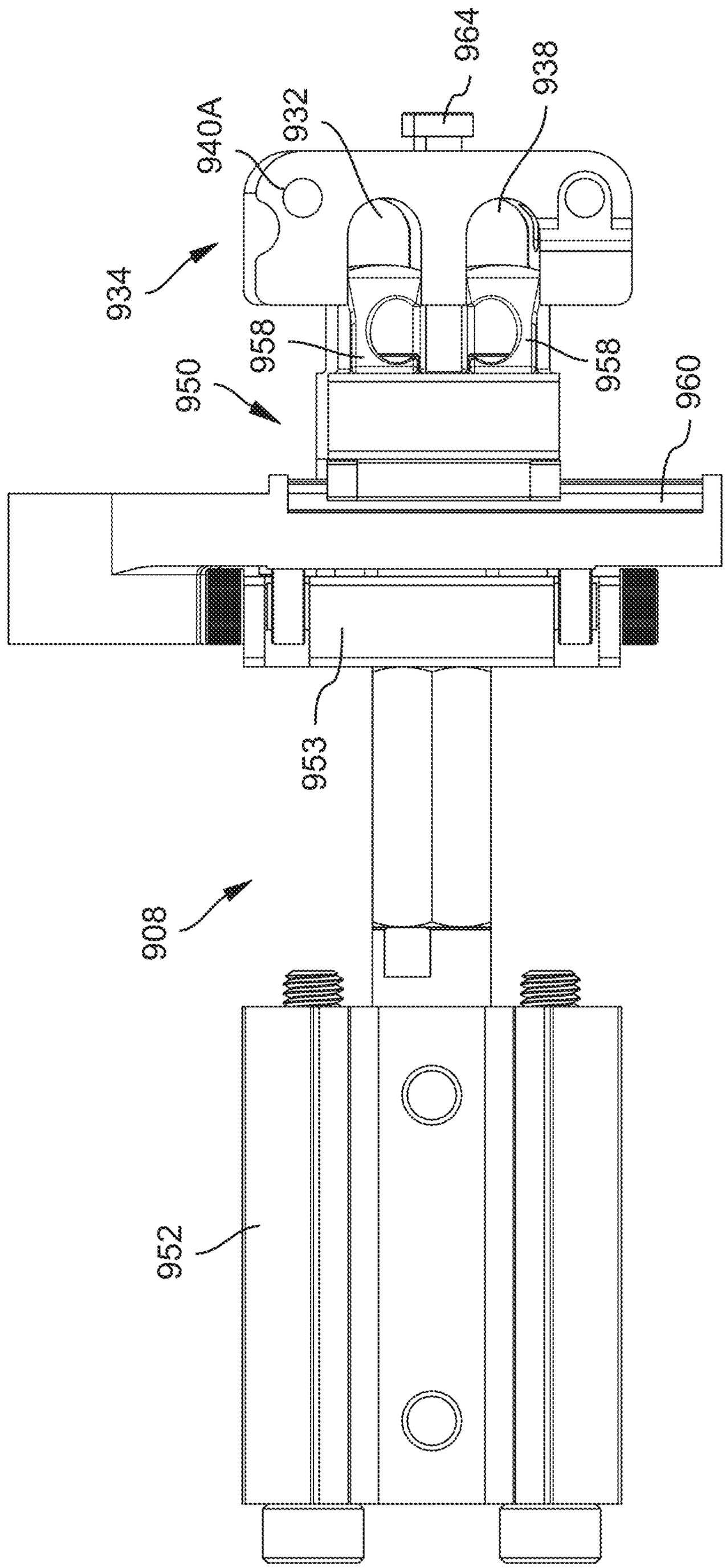

FIG. 243

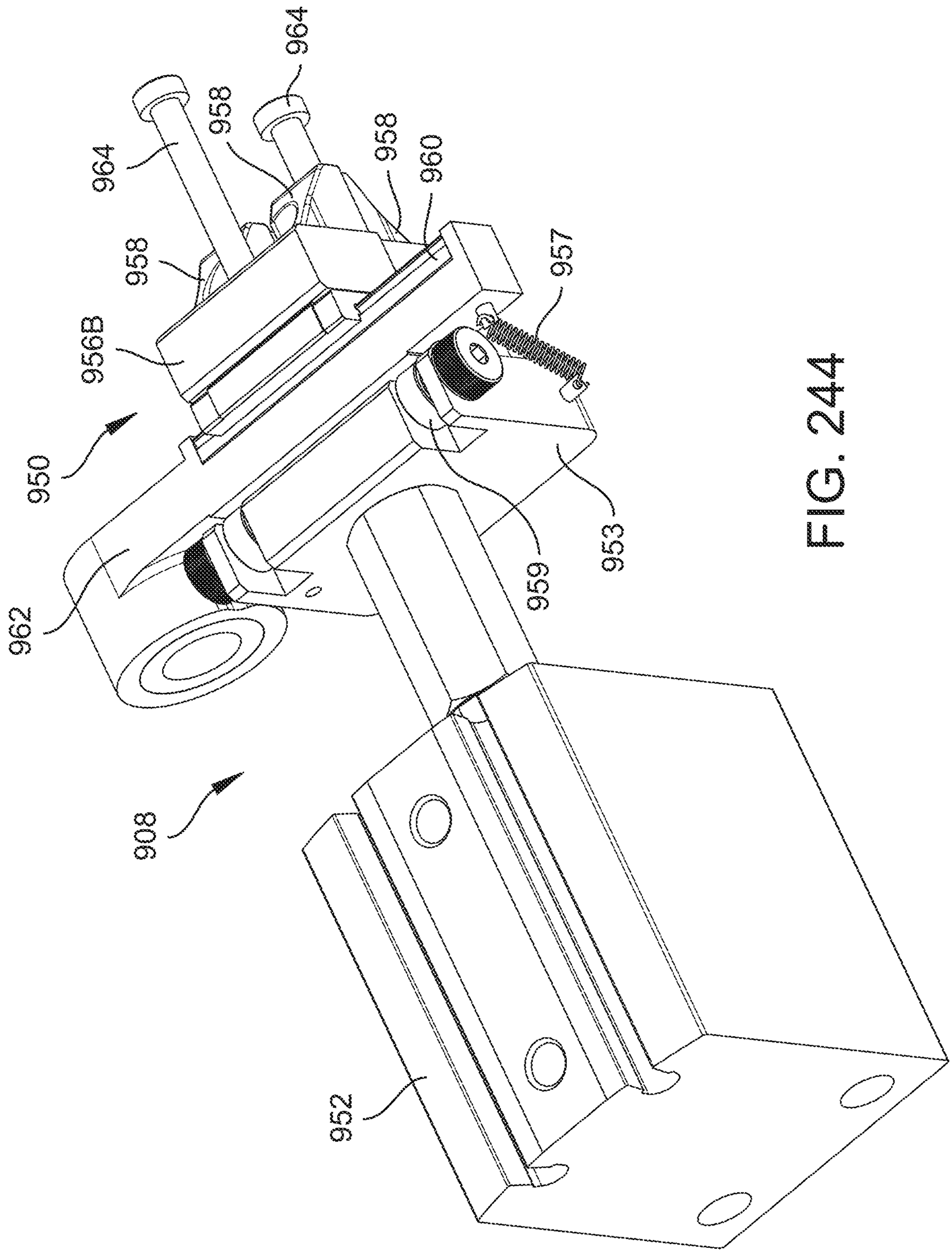

FIG. 244

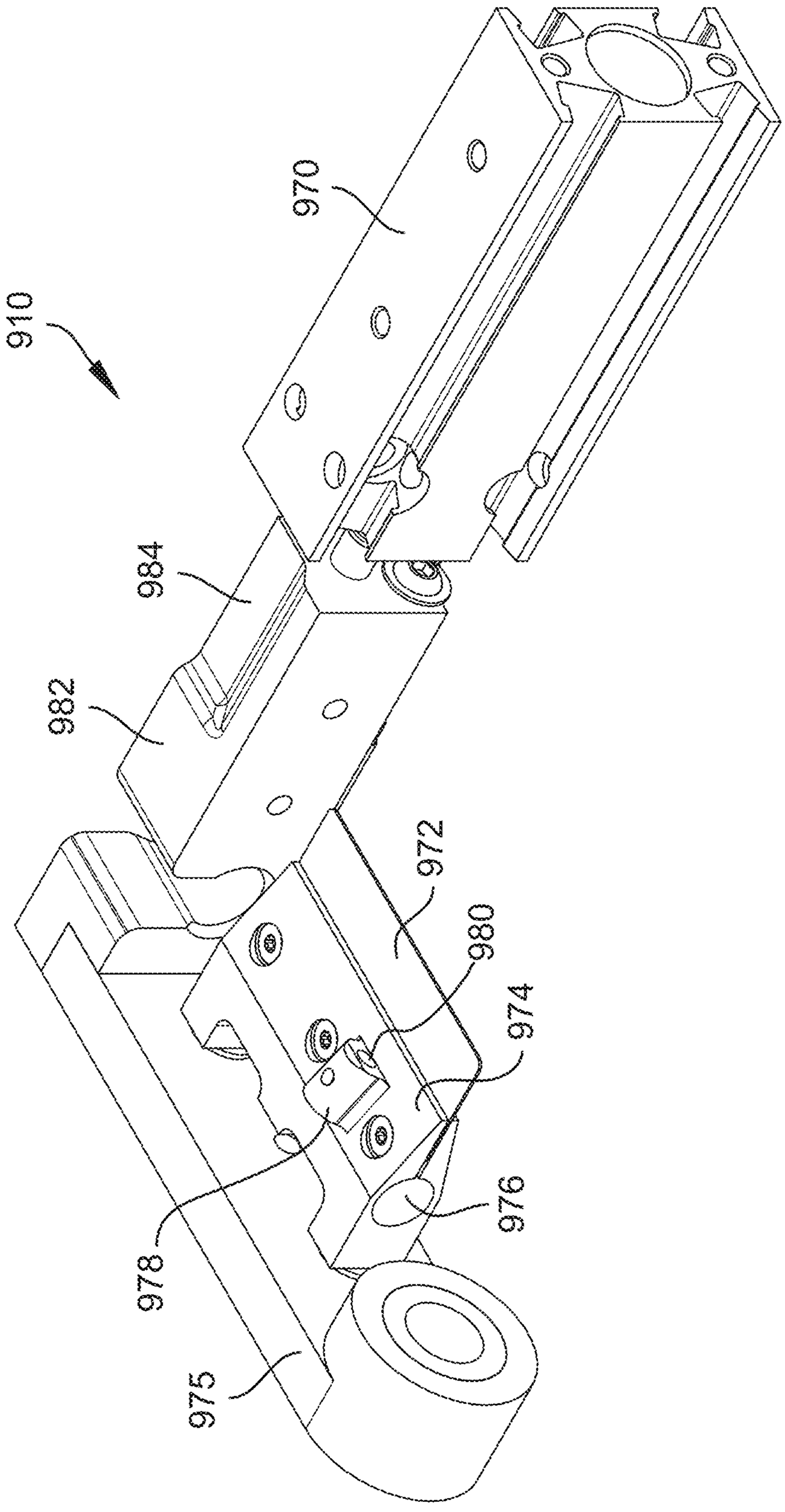

FIG. 245

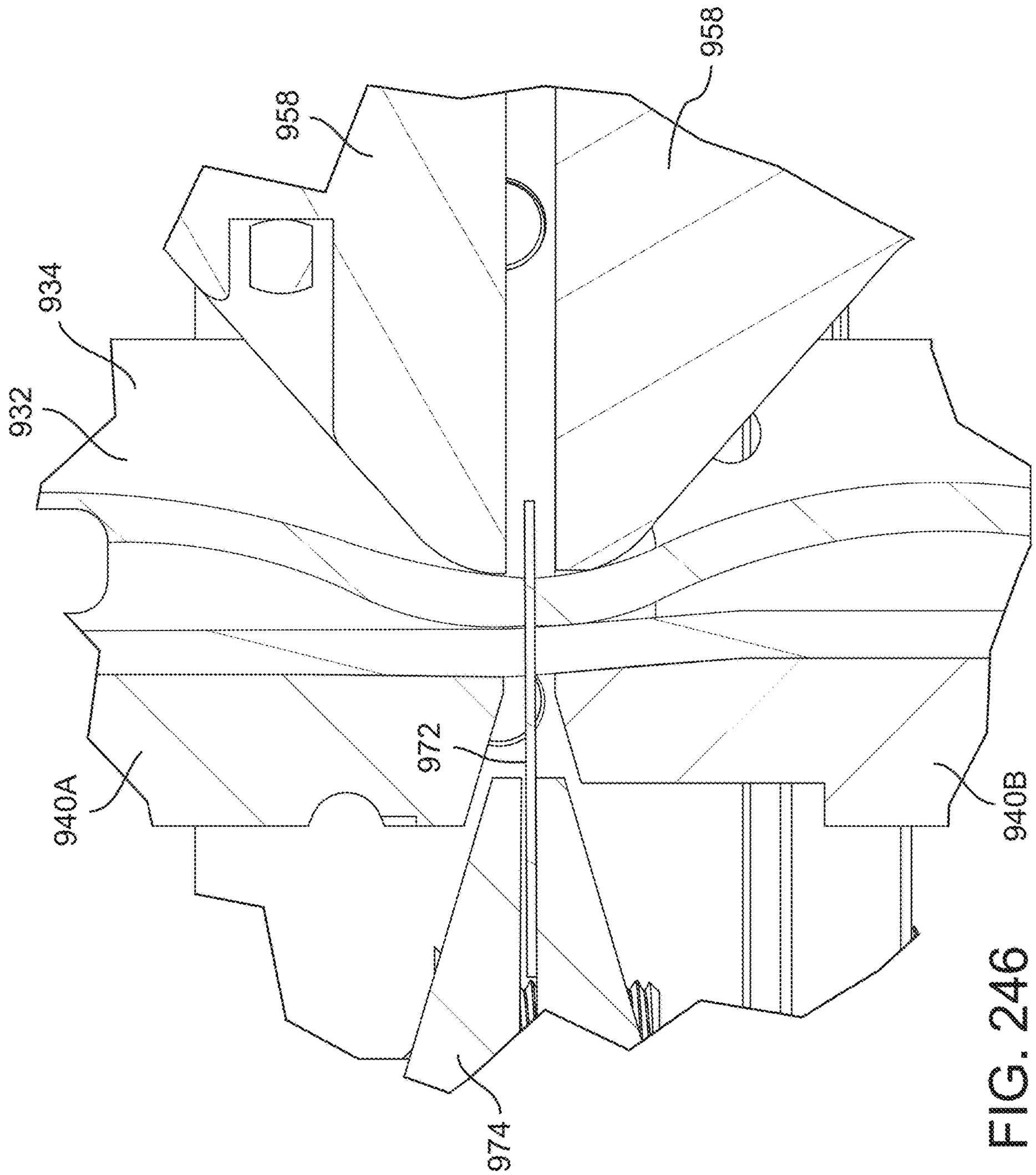

FIG. 246

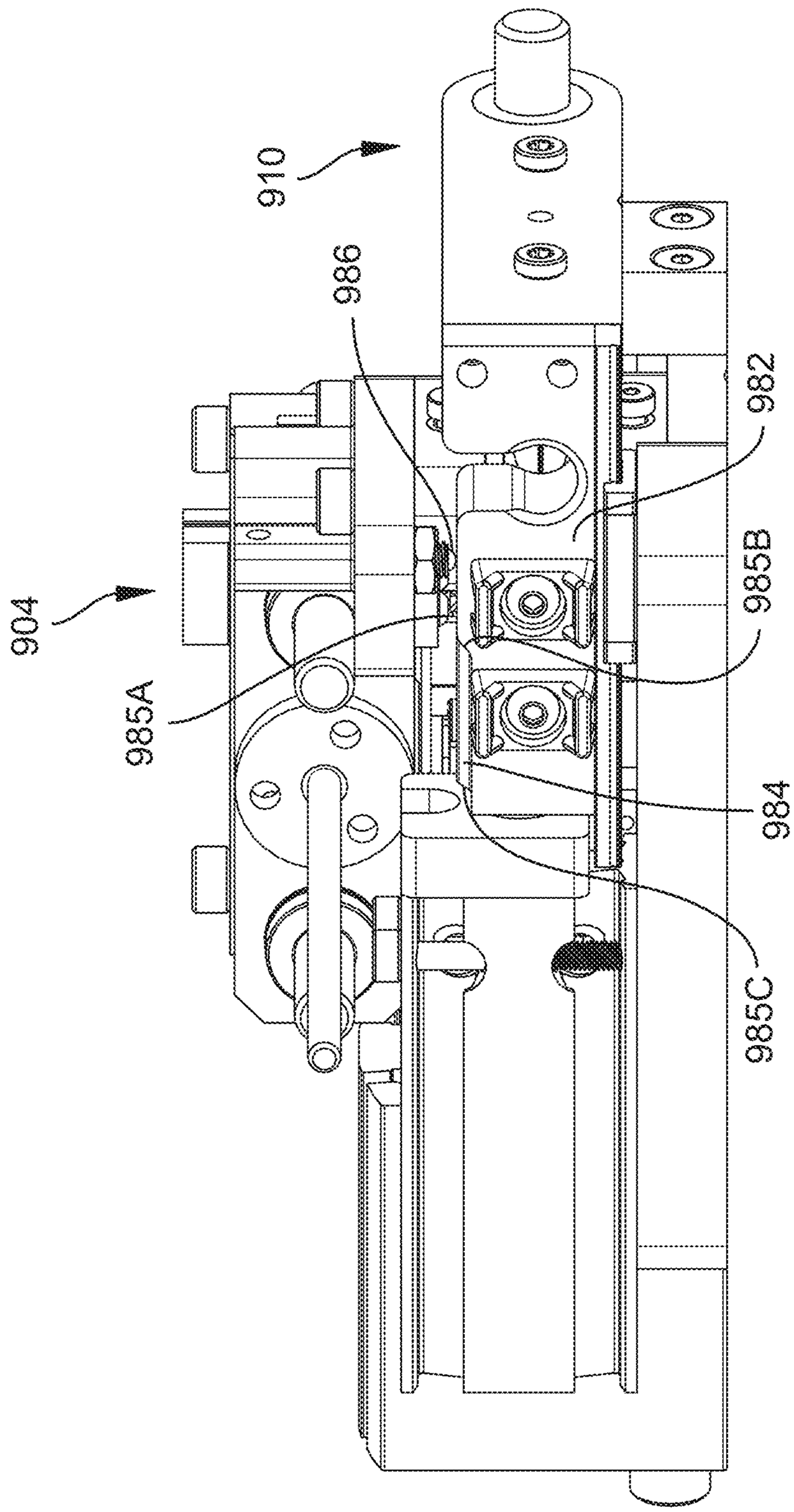

FIG. 247

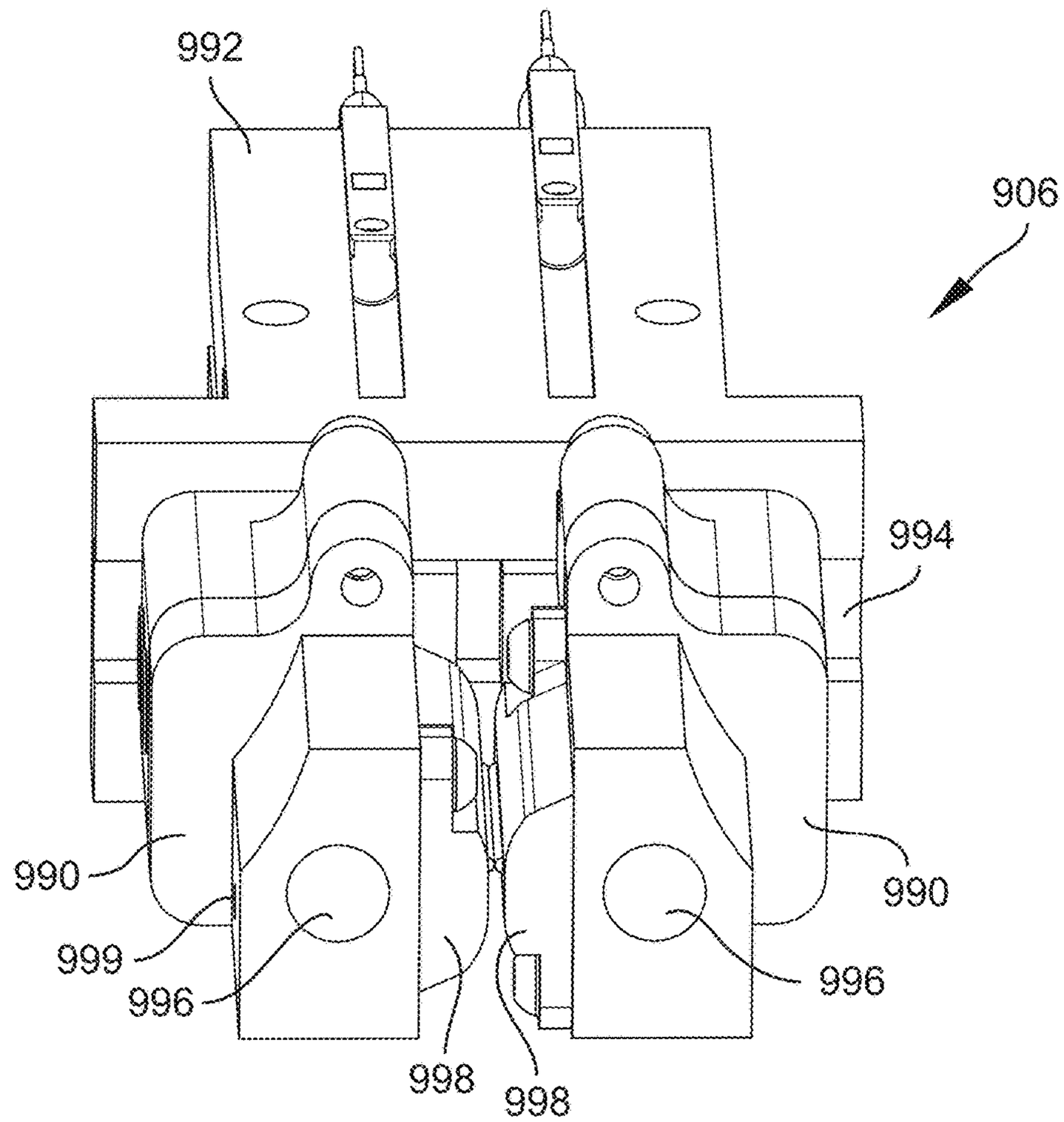

FIG. 248

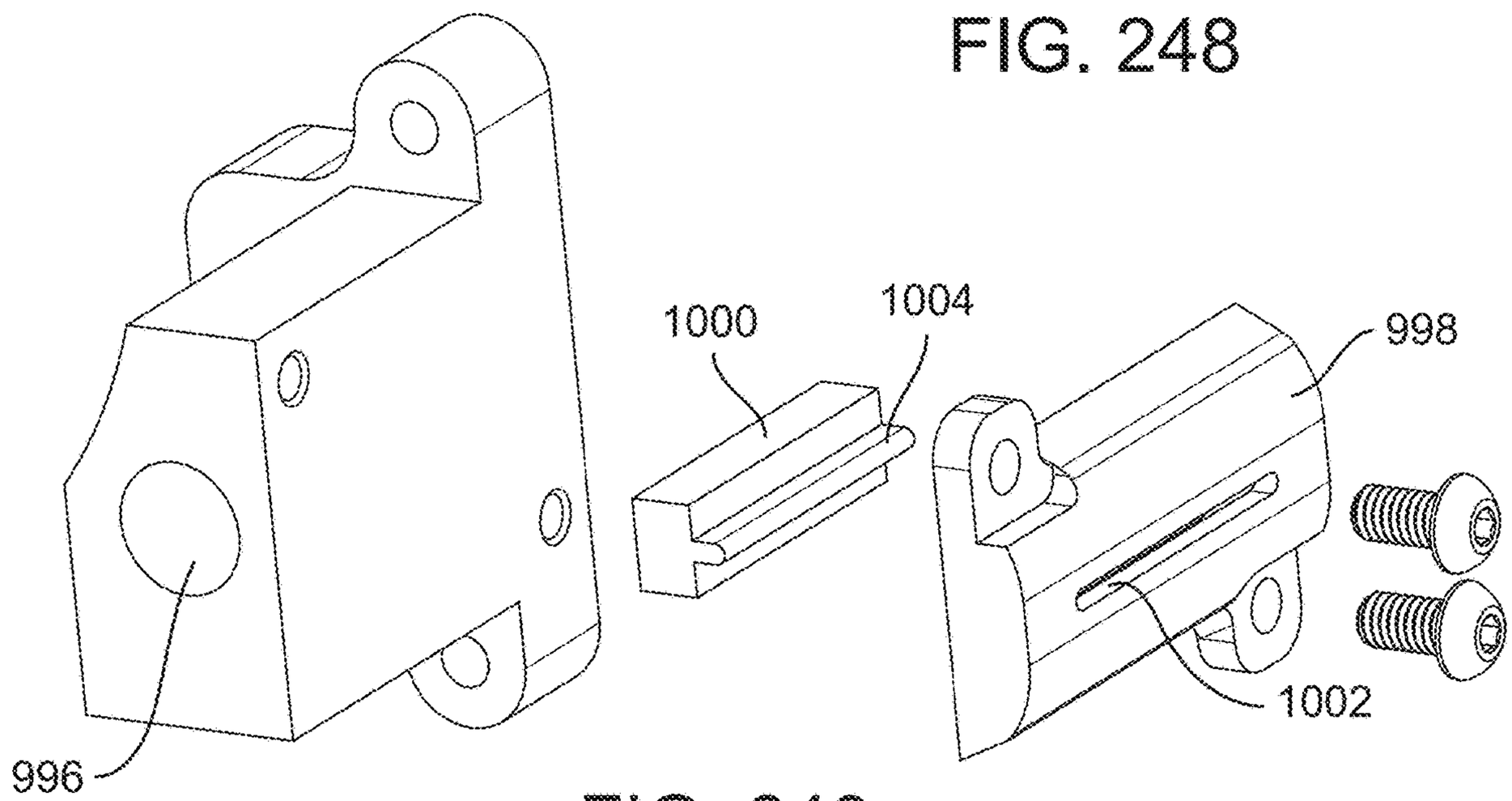

FIG. 249

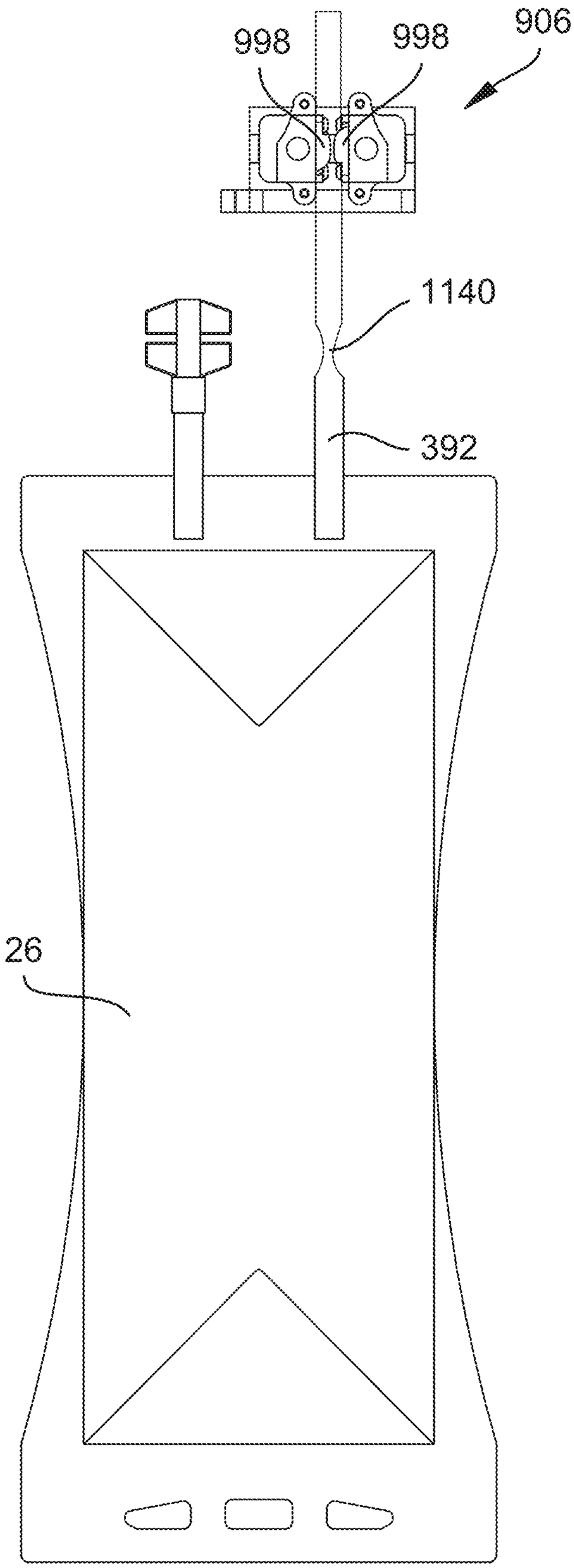

FIG. 250

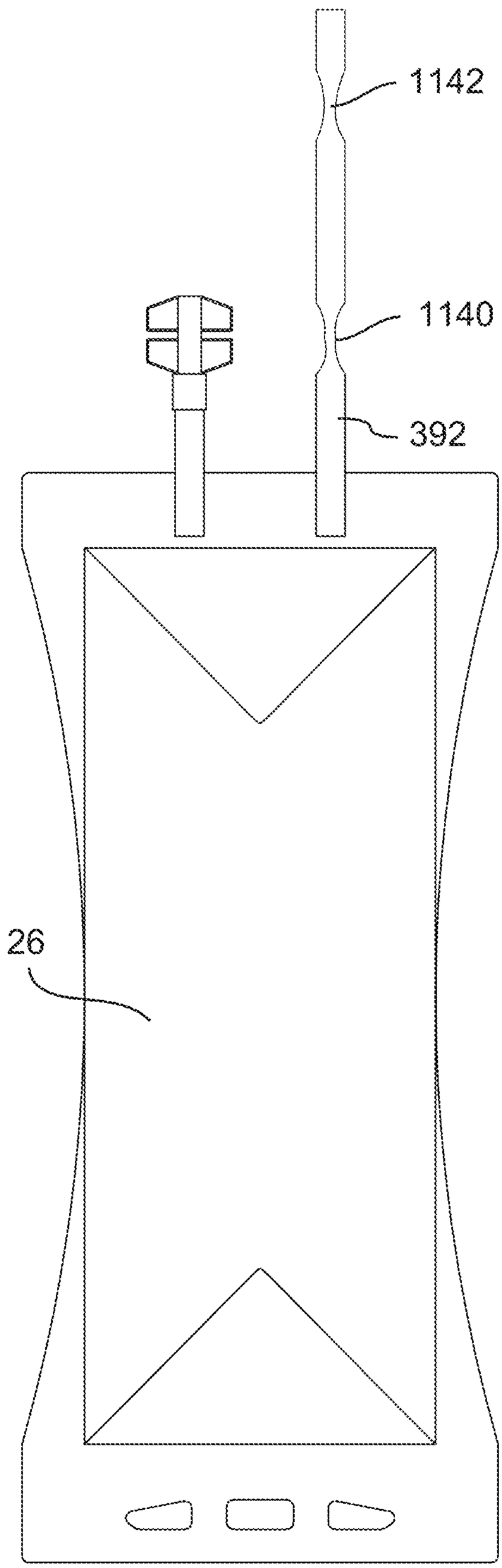

FIG. 251

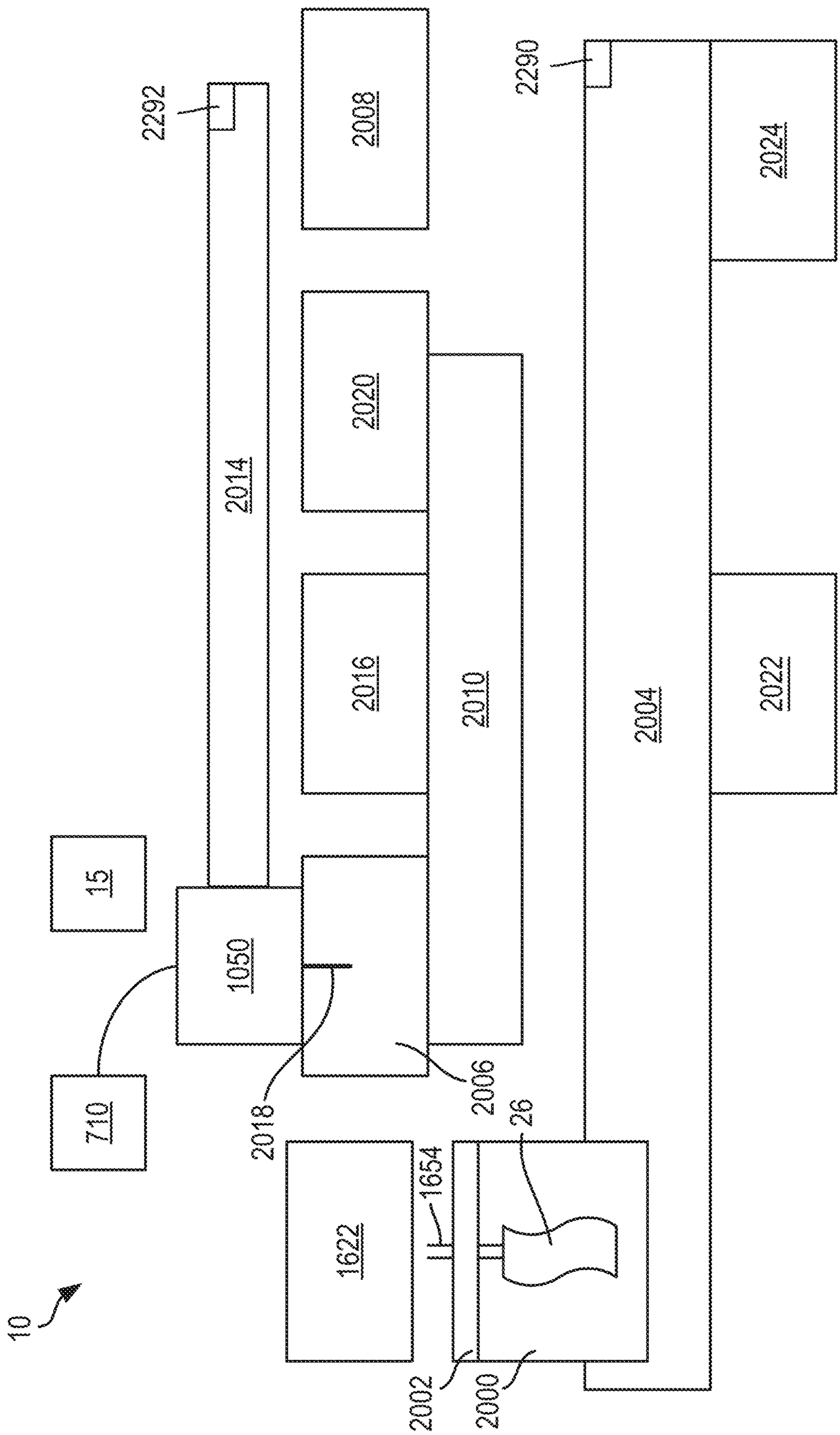
10
15
710
1050
2014
2292
2008
2020
2016
2010
2018
2006
2004
2290
2024
2022
1622
1654
26
2002
2000

FIG. 252

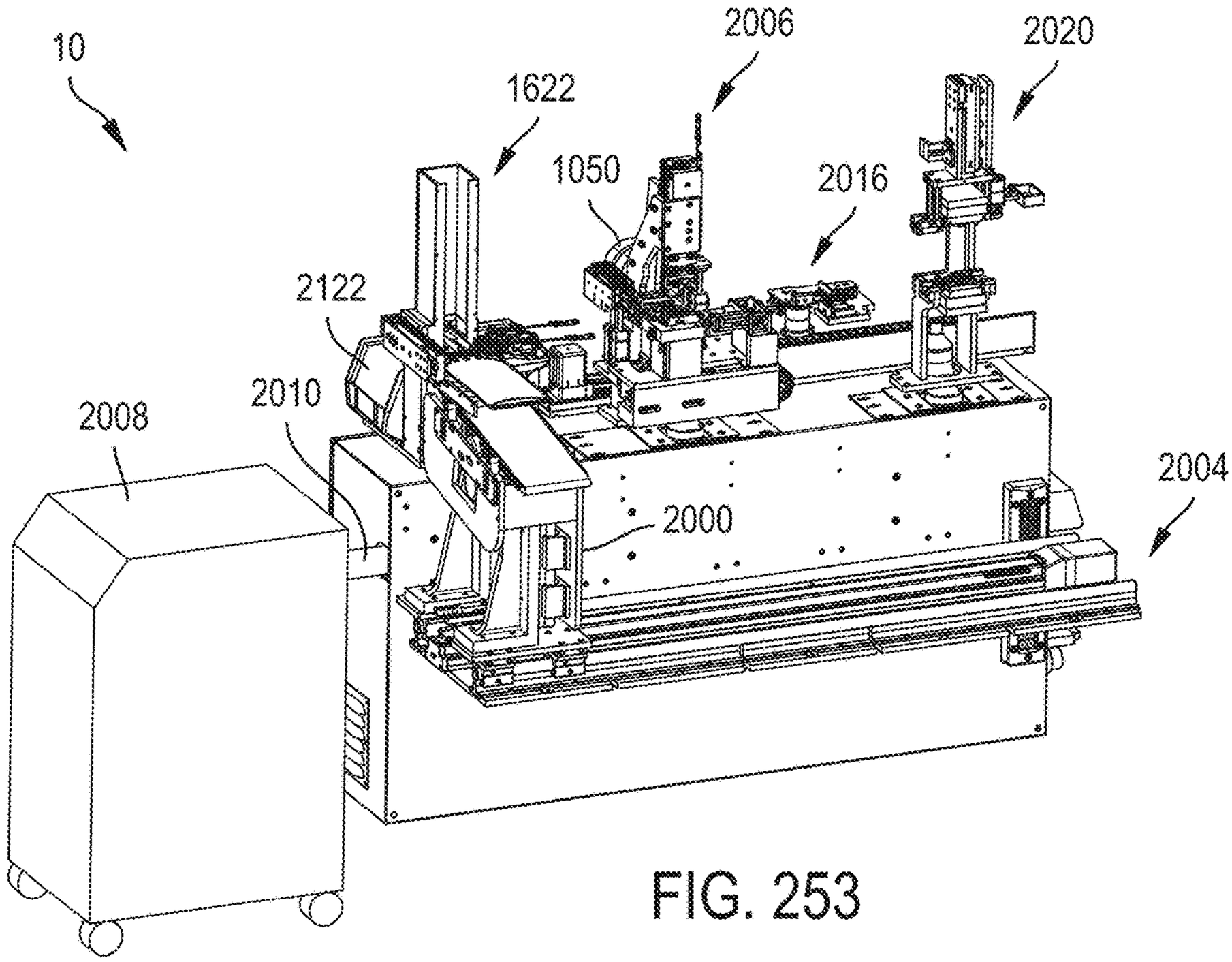

FIG. 253

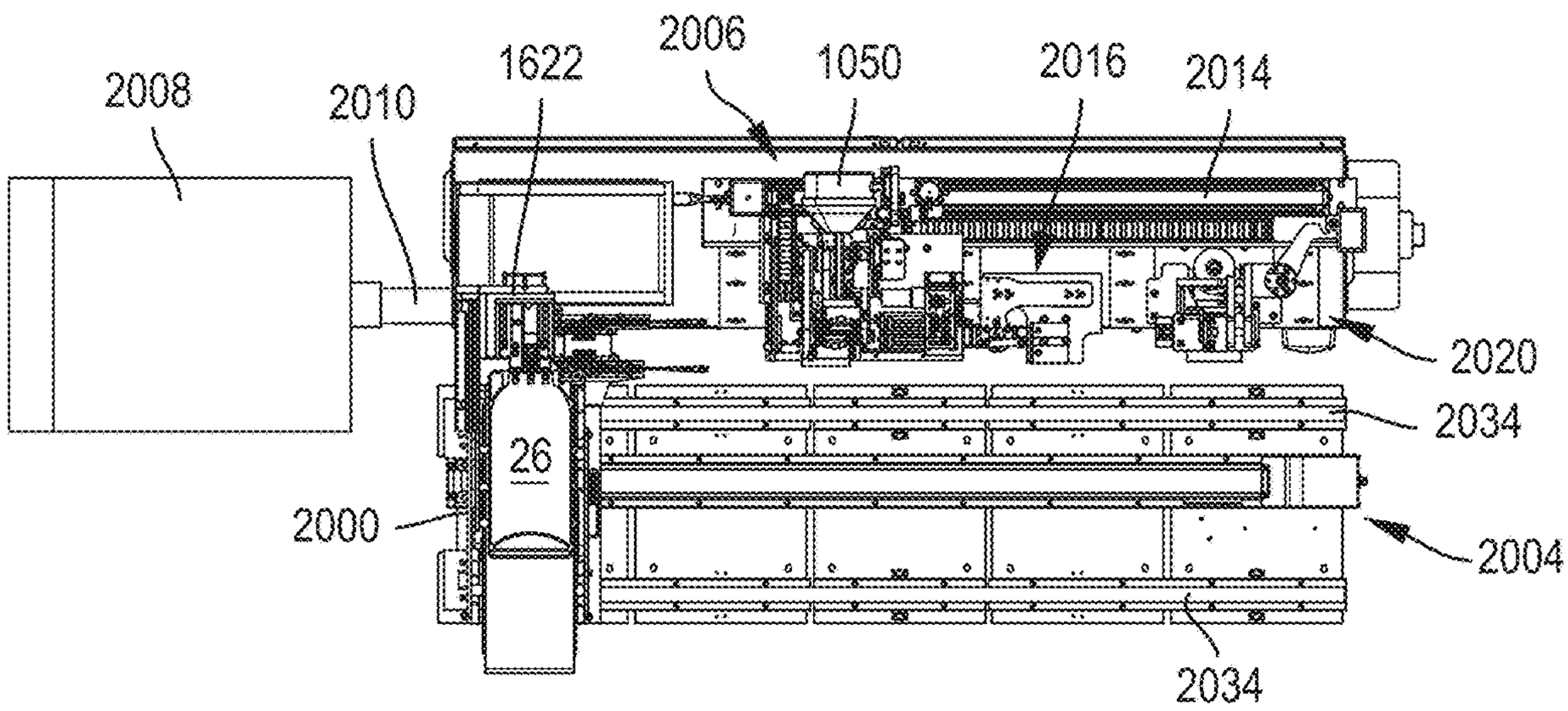

FIG. 254

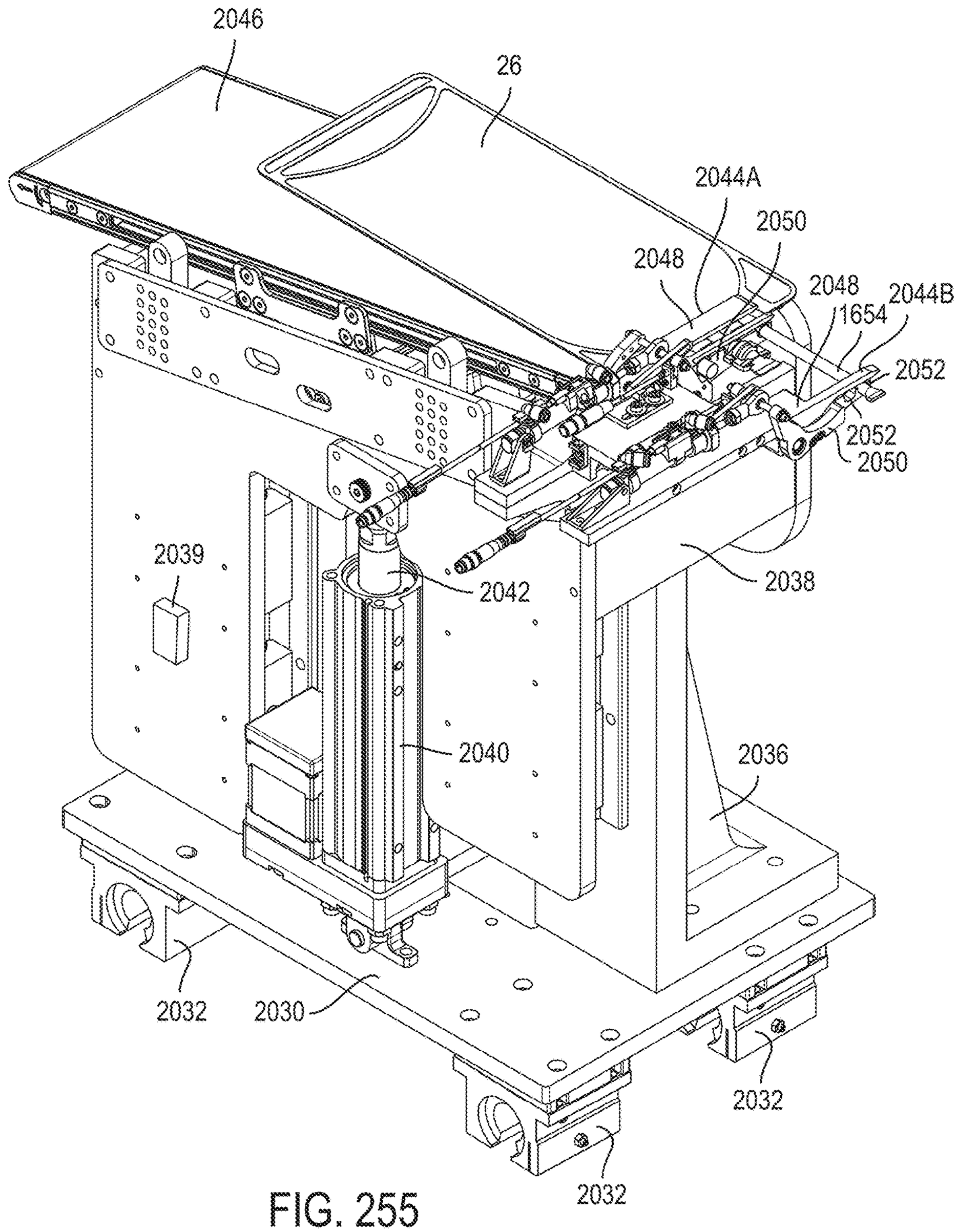
2046
26
2044A
2050
2048
2048
1654
2044B
2052
2052
2050
2039
2042
2038
2040
2036
2032
2030
2032
2032

FIG. 255

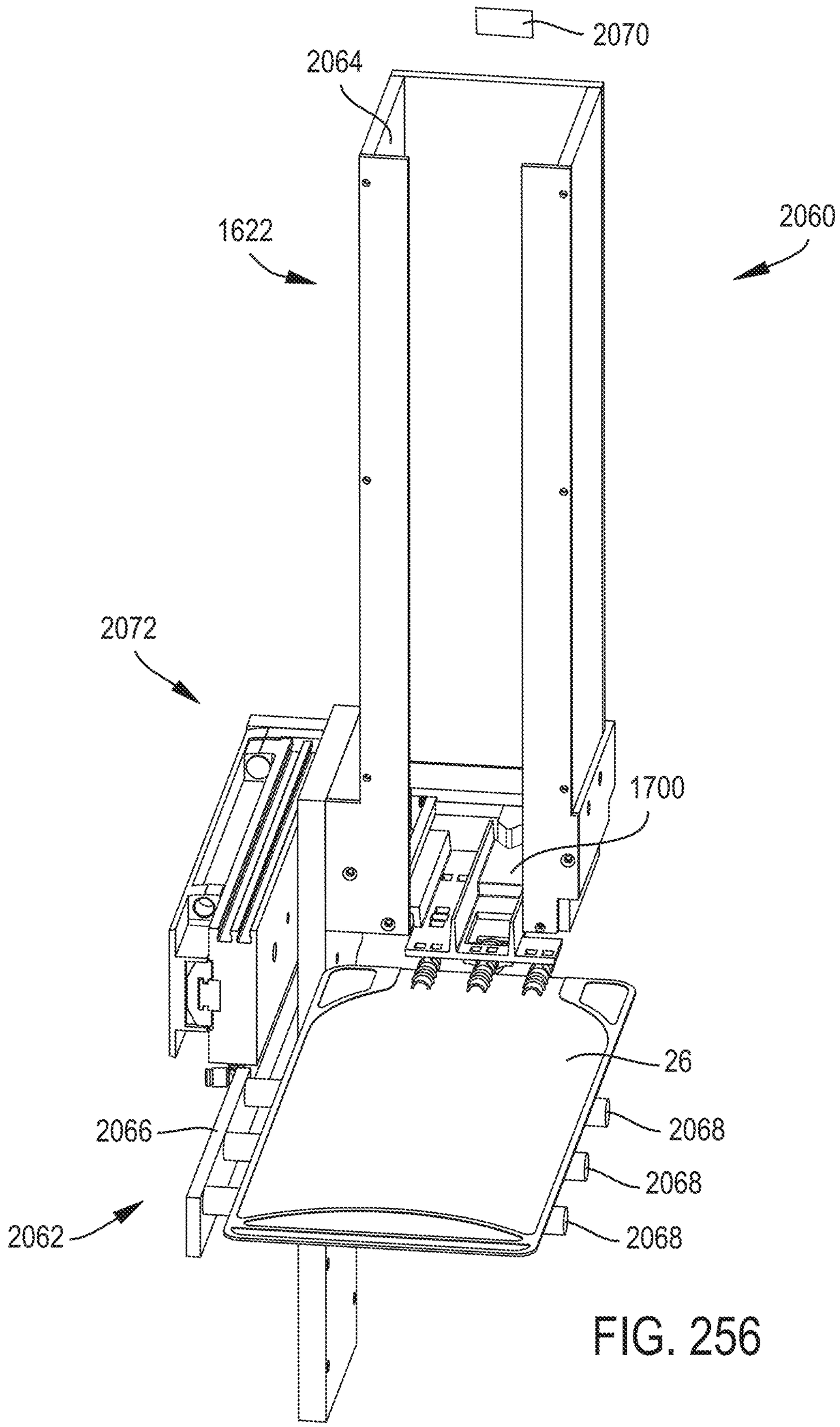

FIG. 256

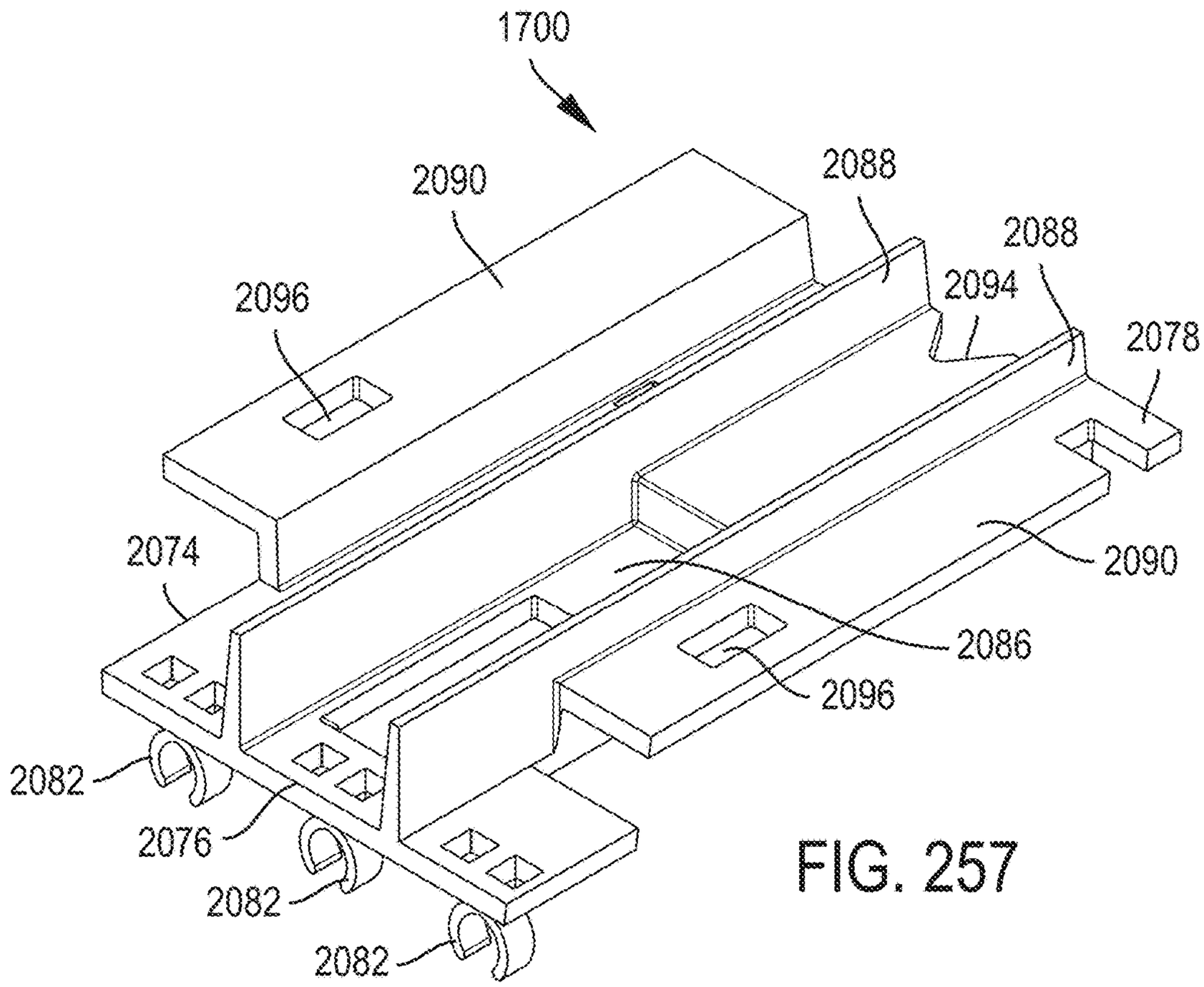

FIG. 257

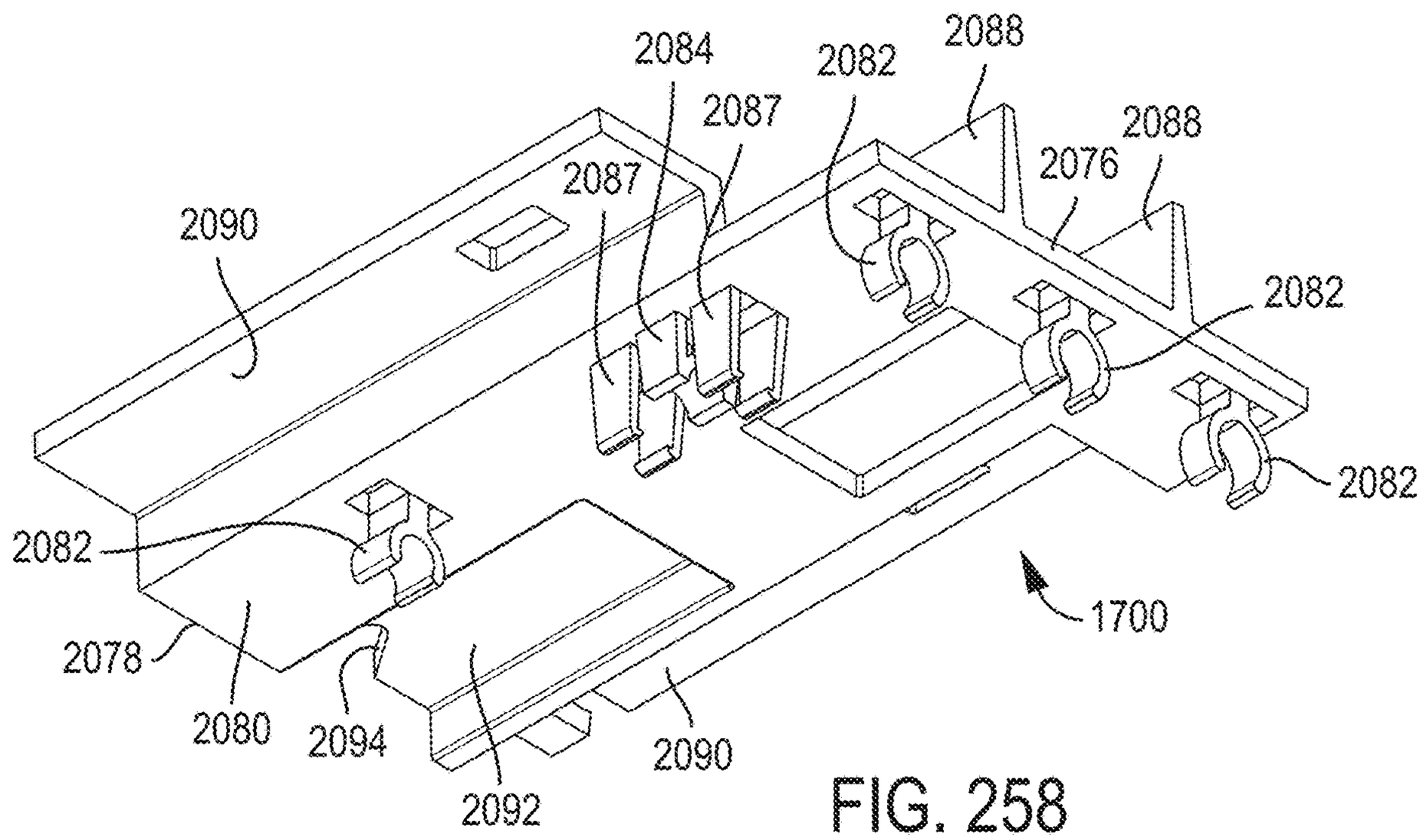

FIG. 258

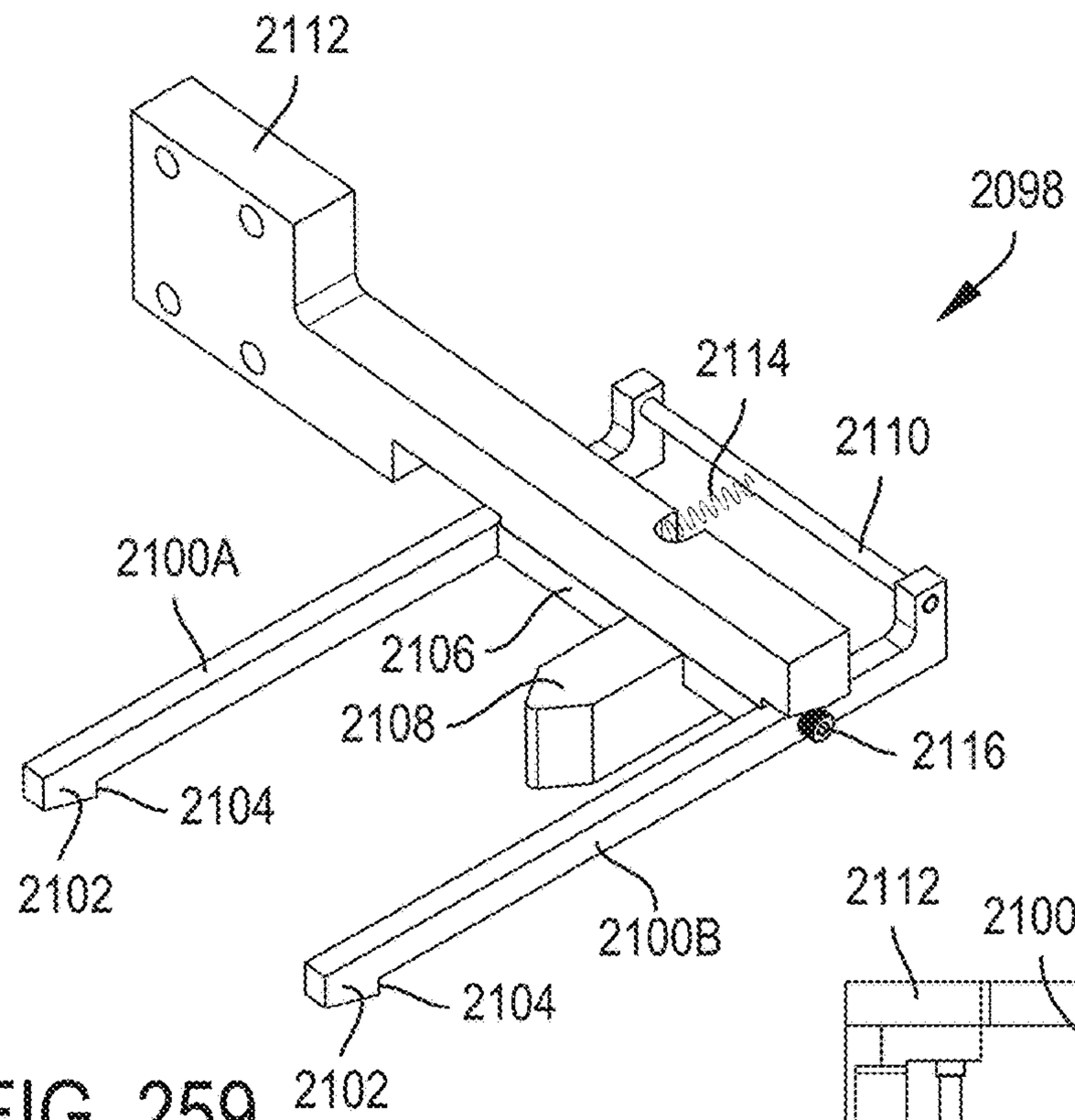

FIG. 259

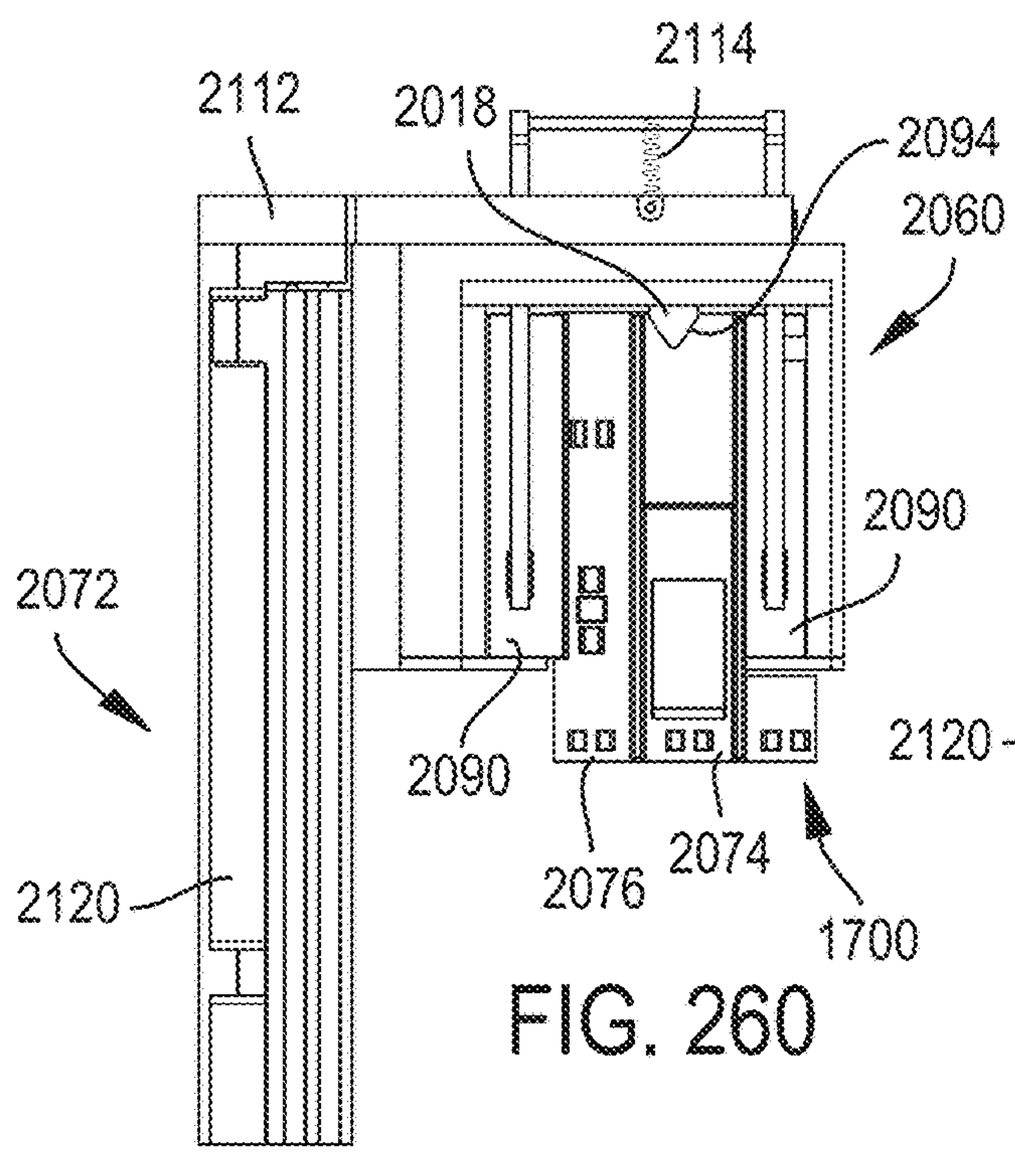

FIG. 260

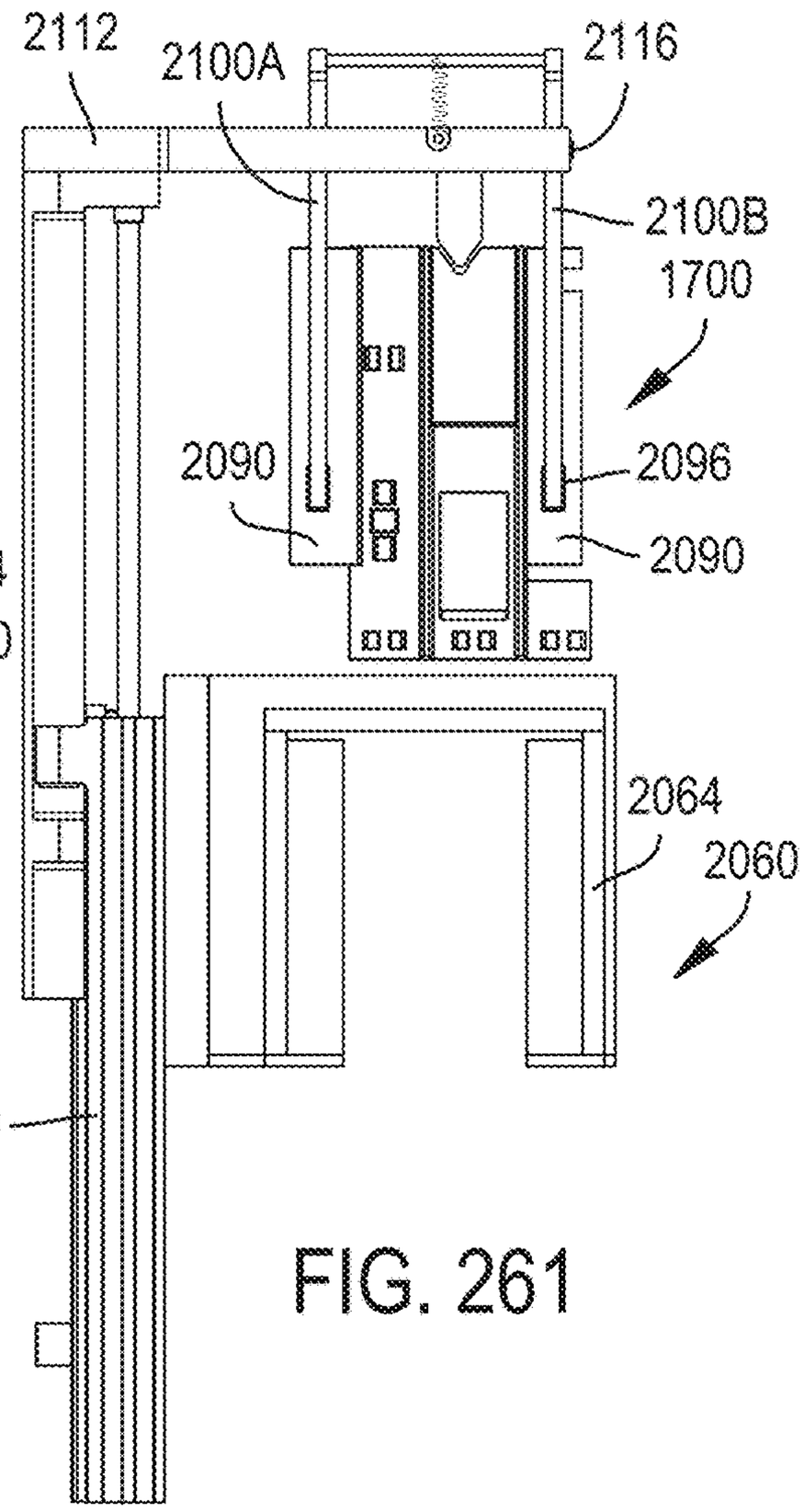

FIG. 261

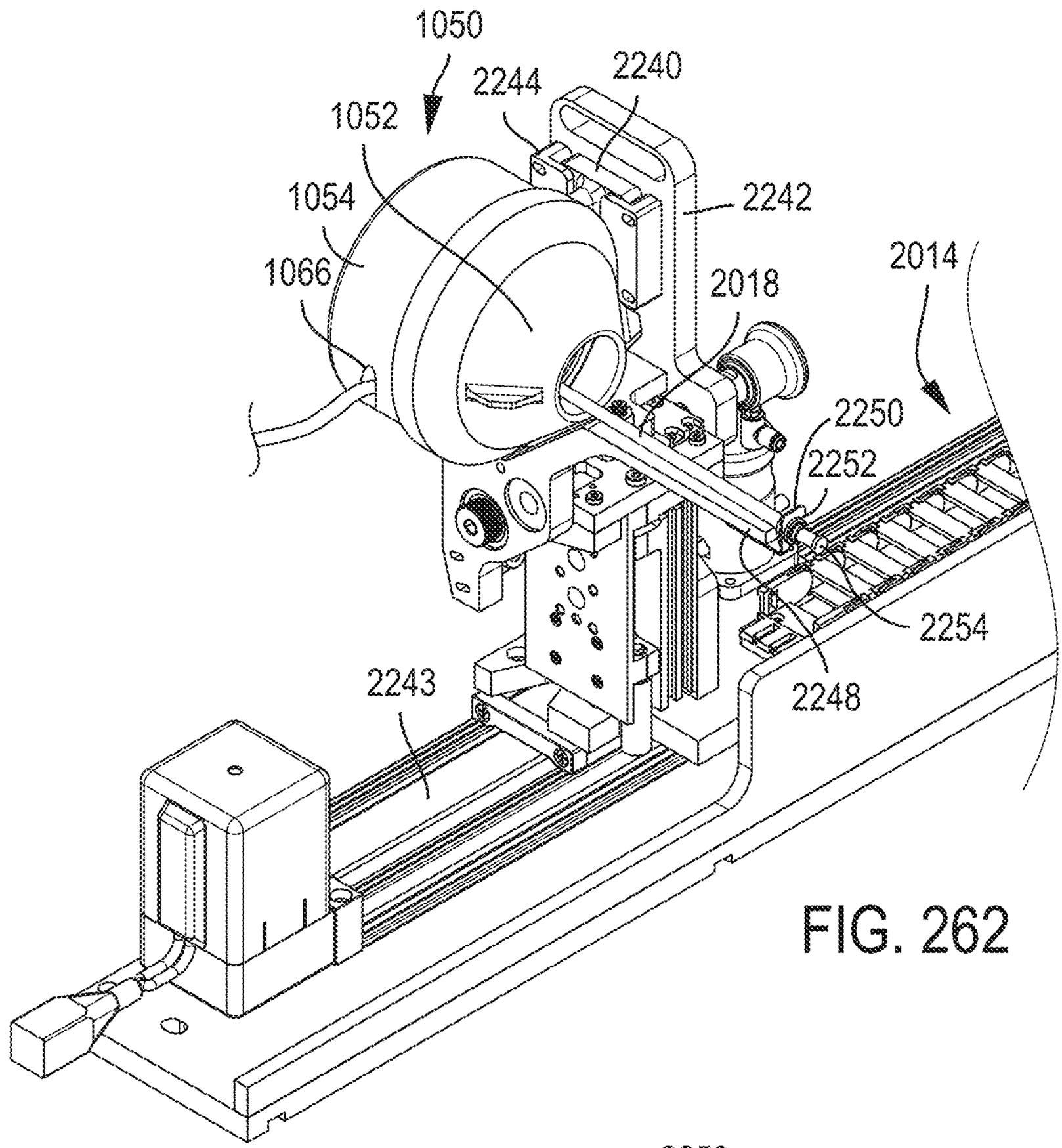

FIG. 262

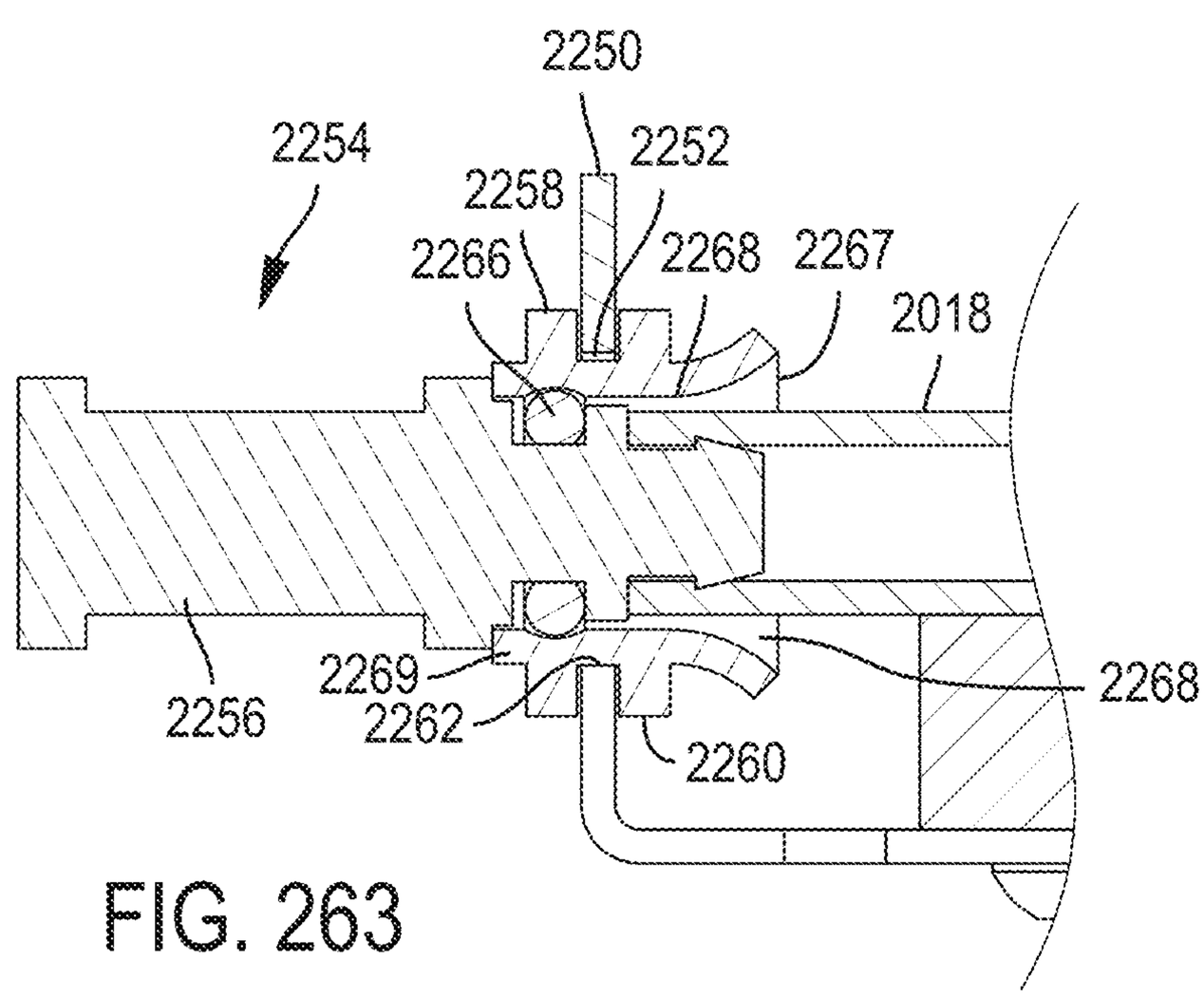

FIG. 263

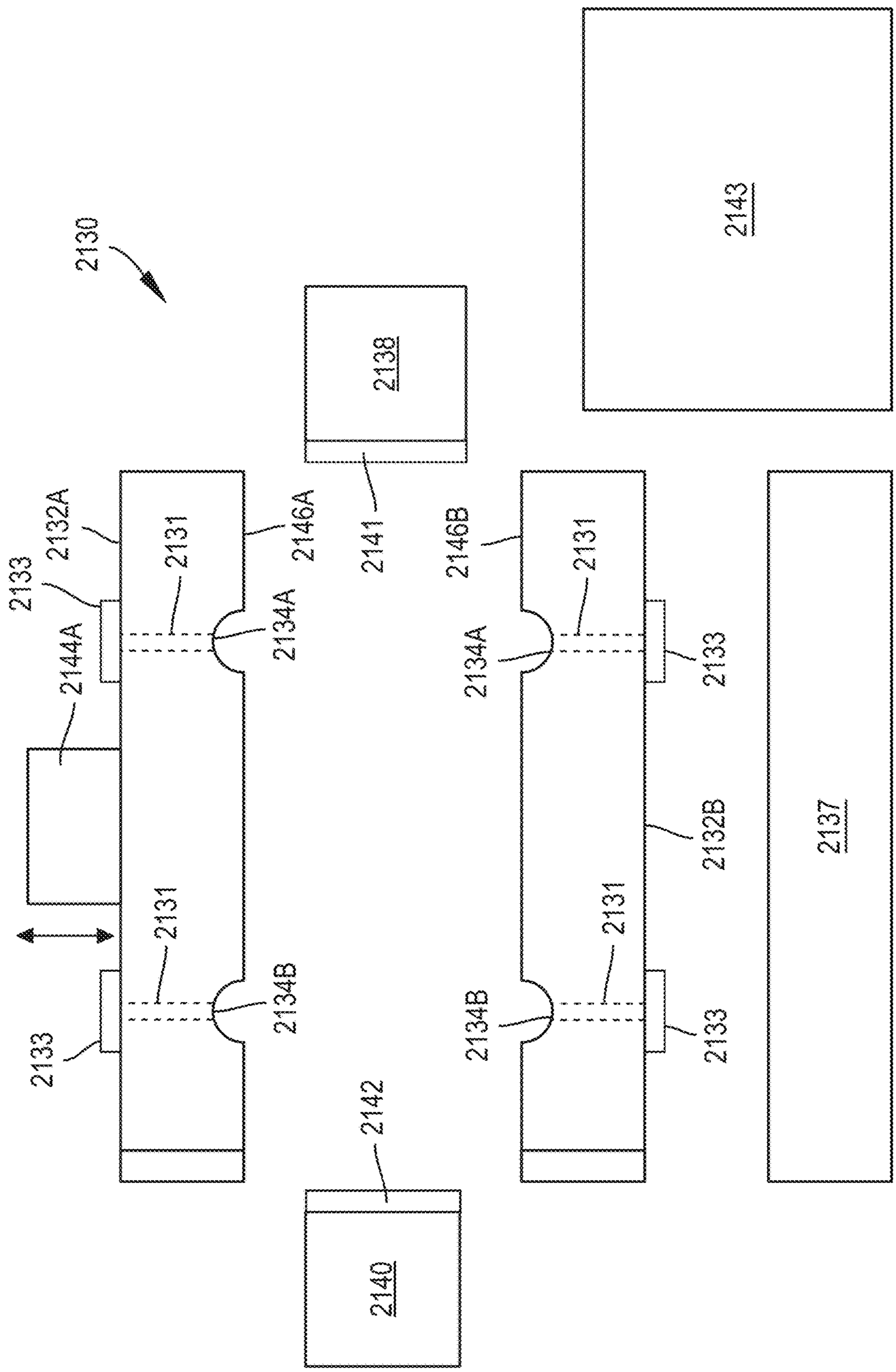
2130
2143
2138
2132A
2131
2146A
2141
2146B
2131
2133
2144A
2134A
2134A
2133
2132B
2137
2131
2134B
2134B
2133
2133
2142
2140

FIG. 264

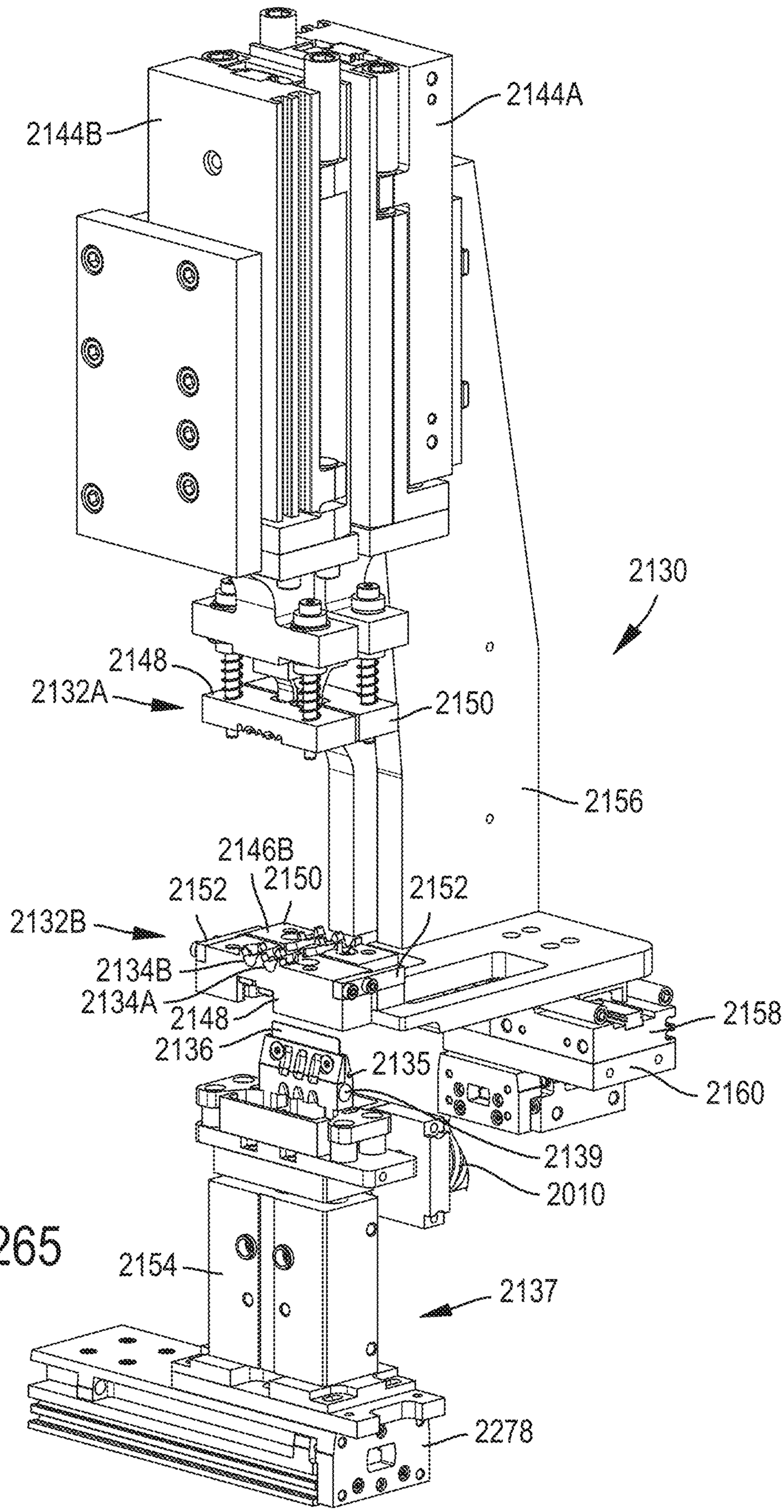
2144A
2144B
2130
2148
2132A
2150
2156
2146B
2150
2152
2152
2132B
2134B
2134A
2148
2158
2136
2135
2160
2139
2010
2154
2137
2278

FIG. 265

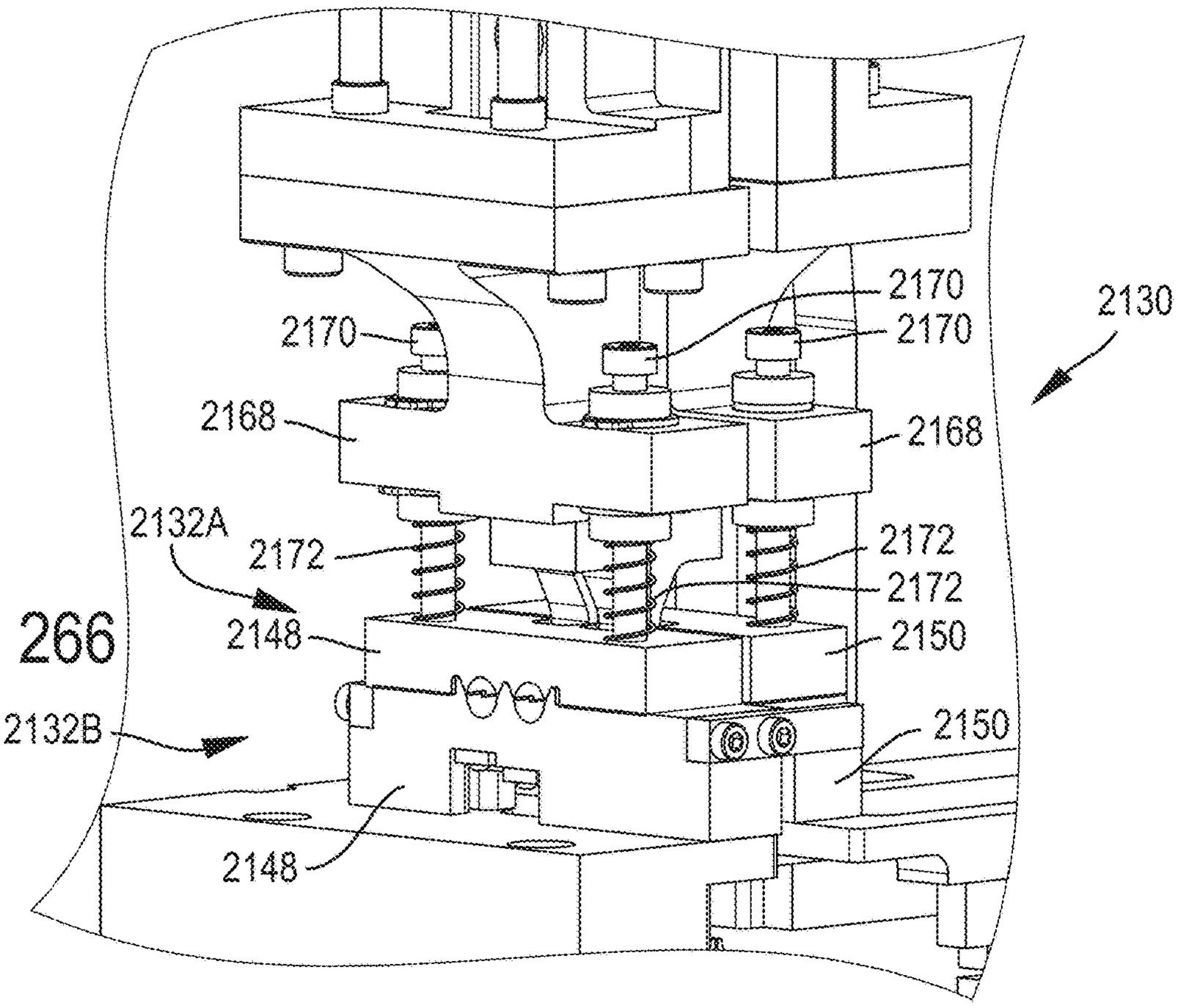

FIG. 266

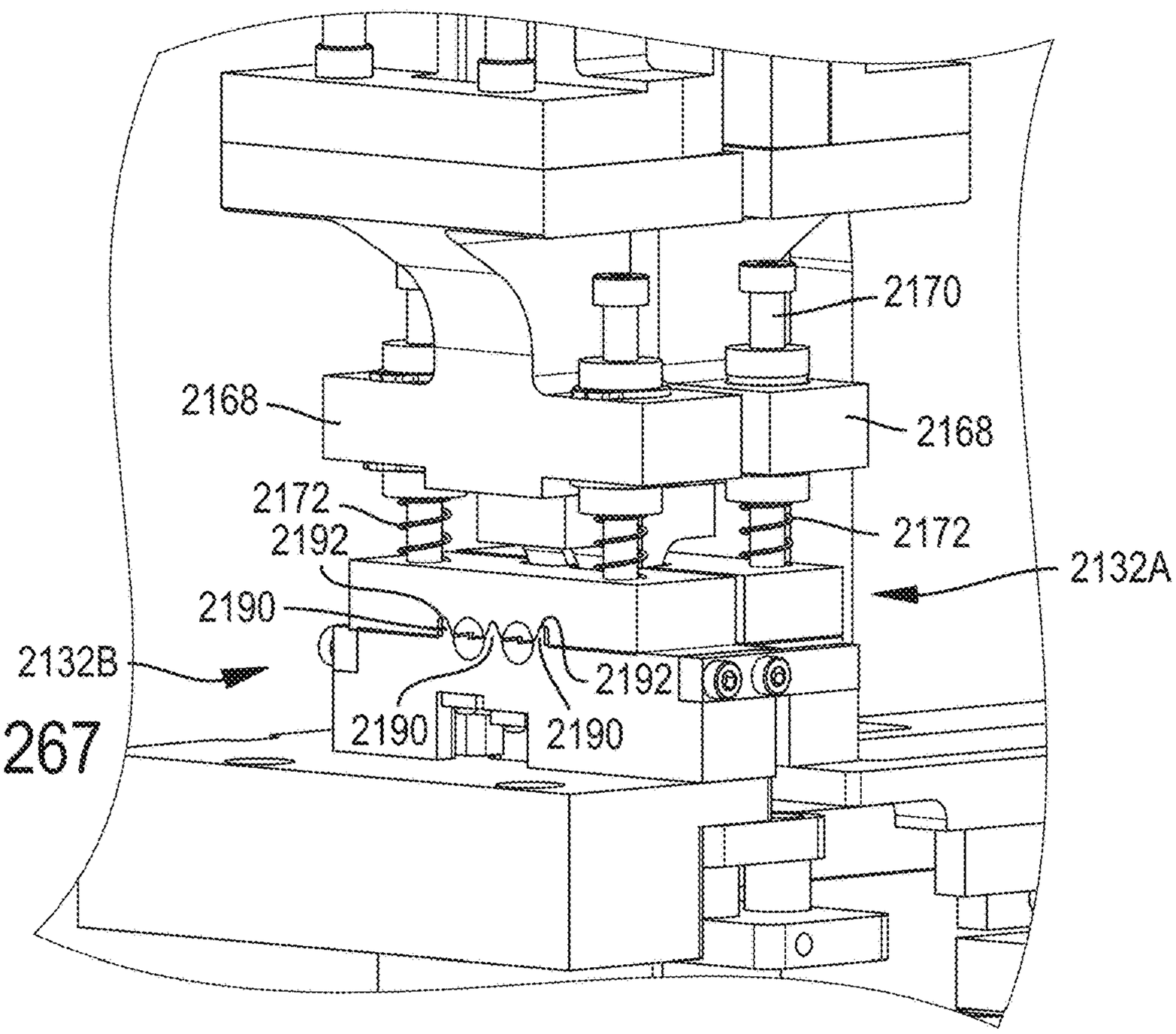

FIG. 267

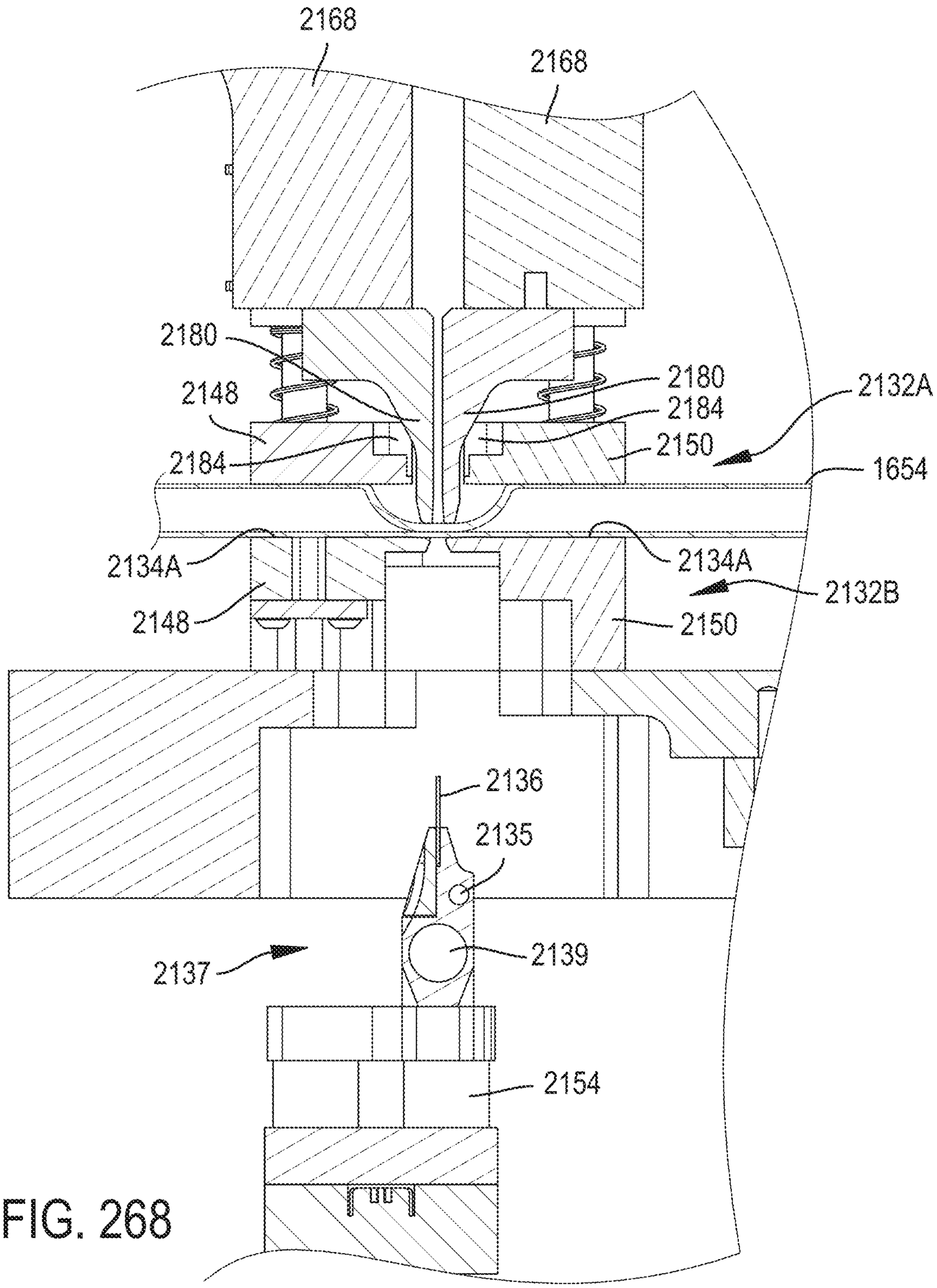
2168
2168
2180
2148
2180
2184
2132A
2184
2150
1654
2134A
2134A
2132B
2148
2150
2136
2135
2137
2139
2154

FIG. 268

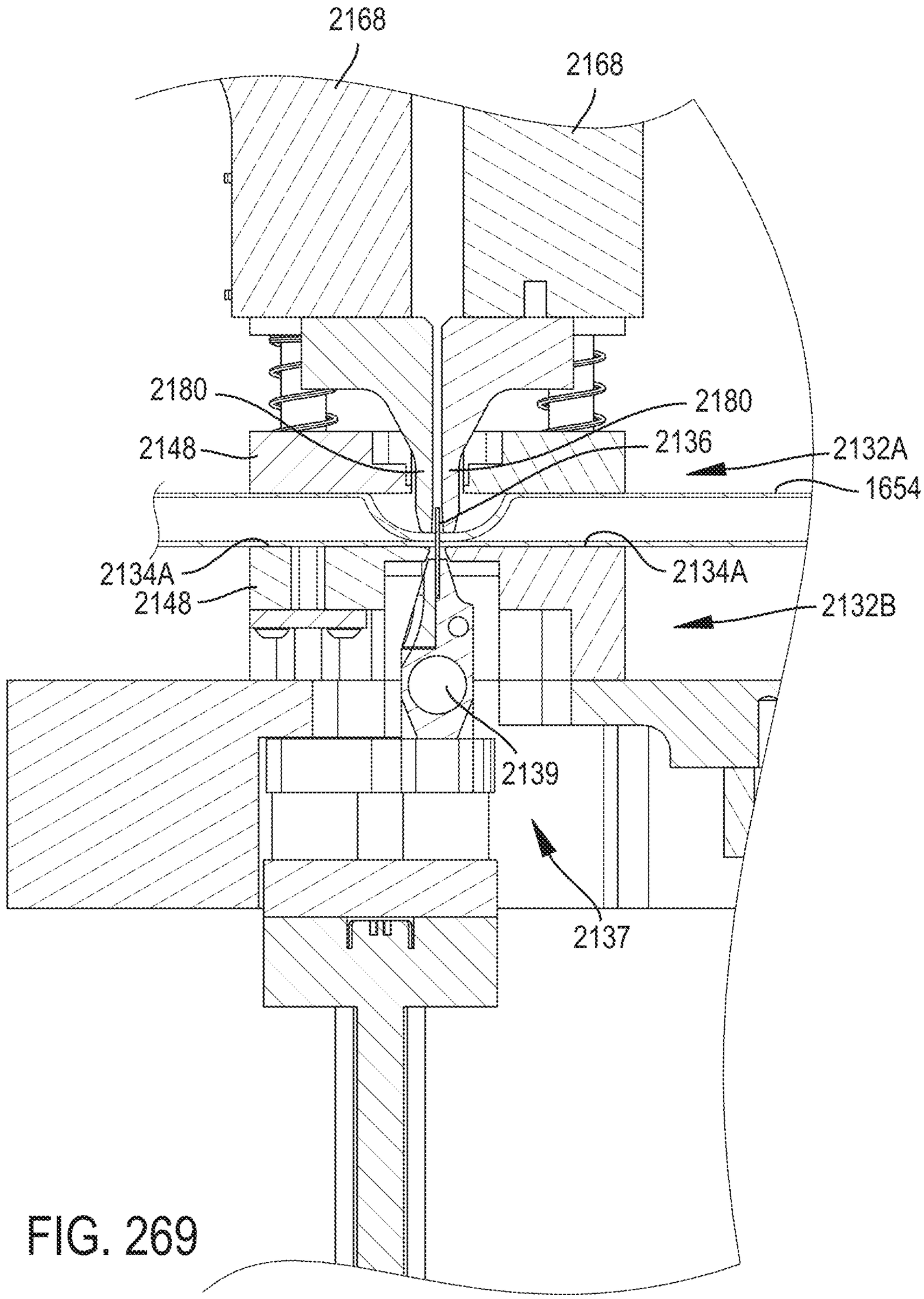
2168
2168
2180
2180
2148
2136
2132A
1654
2134A
2134A
2148
2132B
2139
2137

FIG. 269

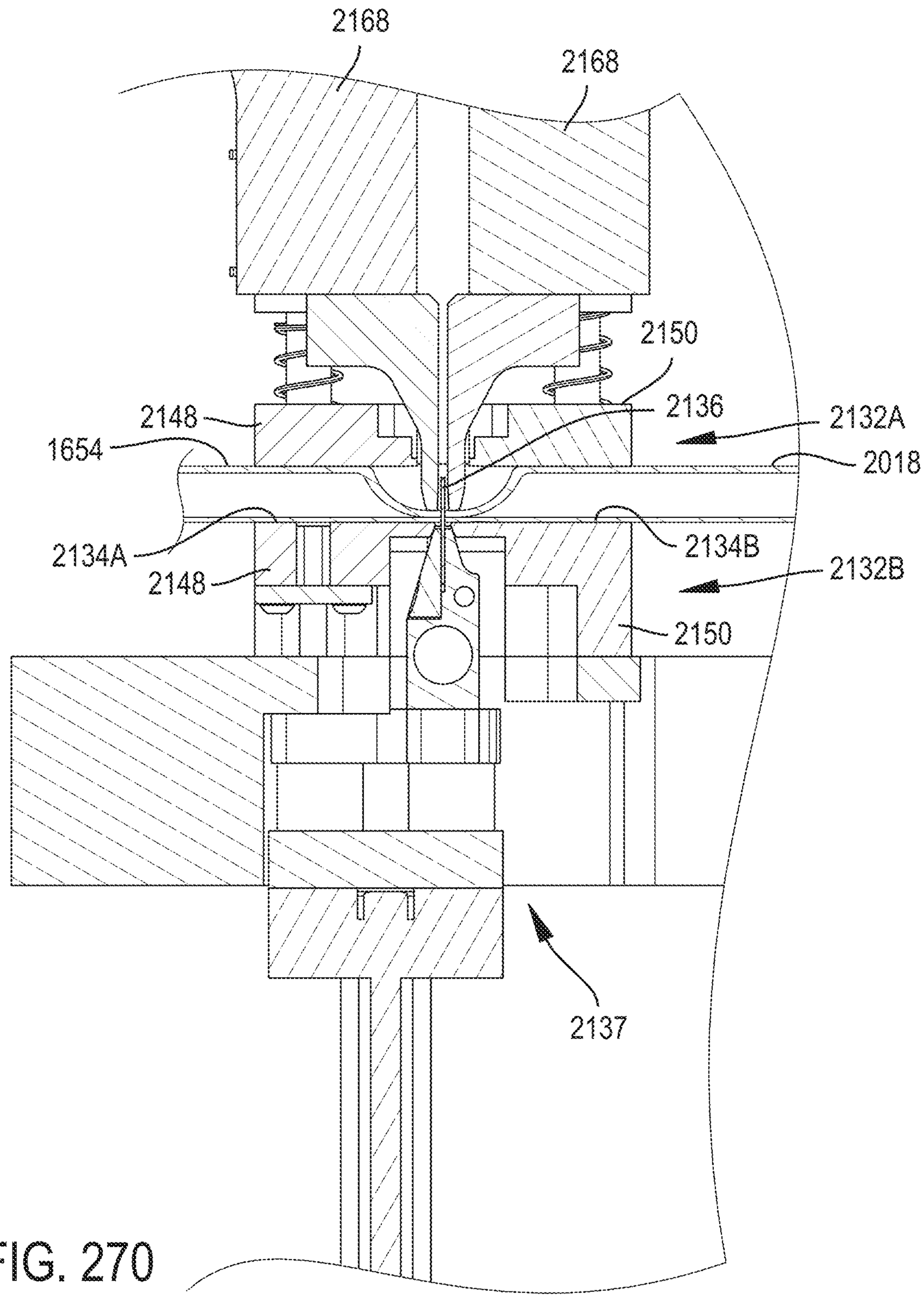
2168
2168
2150
2136
2148
2132A
1654
2018
2134A
2134B
2148
2132B
2150
2137

FIG. 270

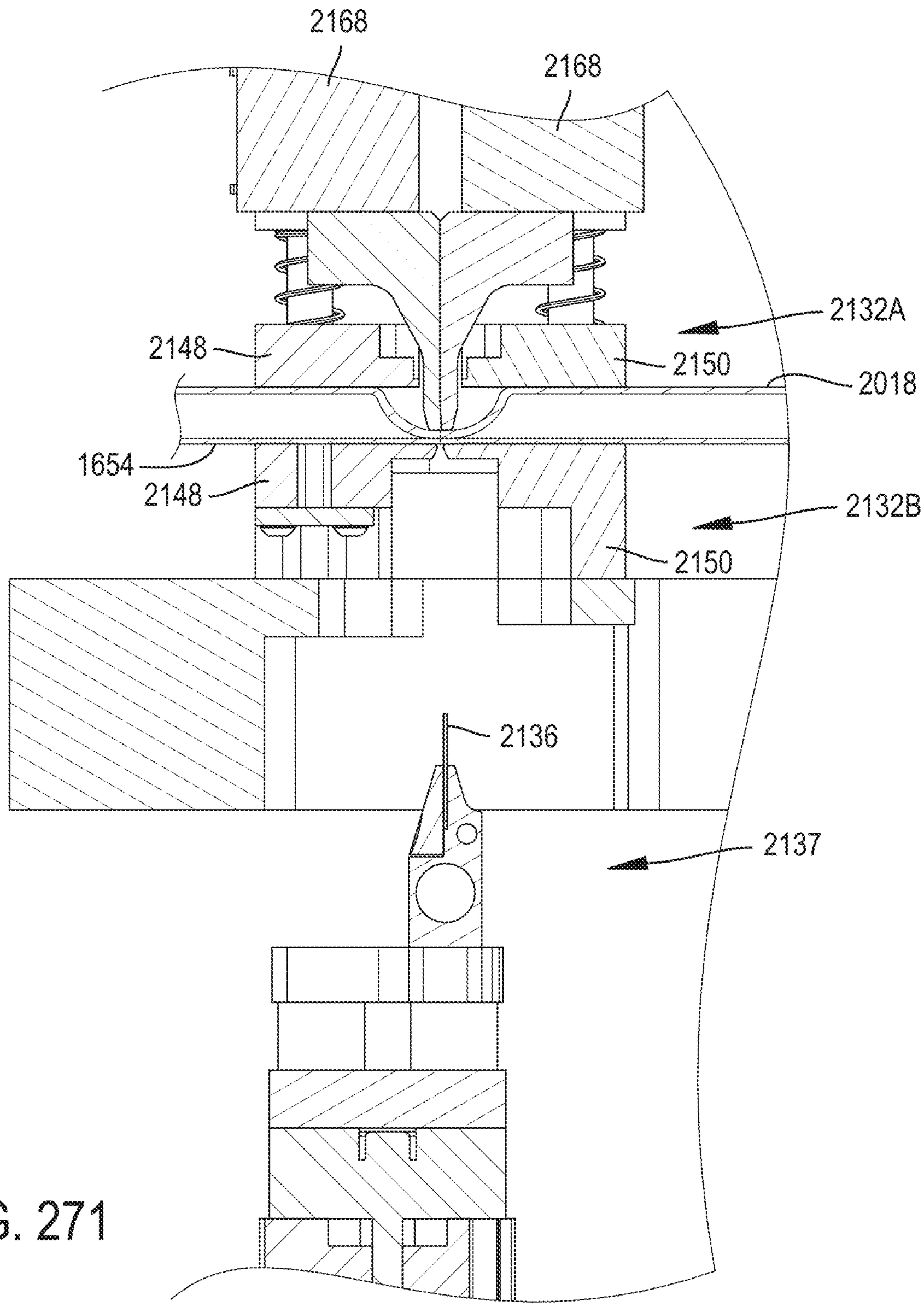
2168
2168
2132A
2148
2150
2018
1654
2148
2132B
2150
2136
2137

FIG. 271

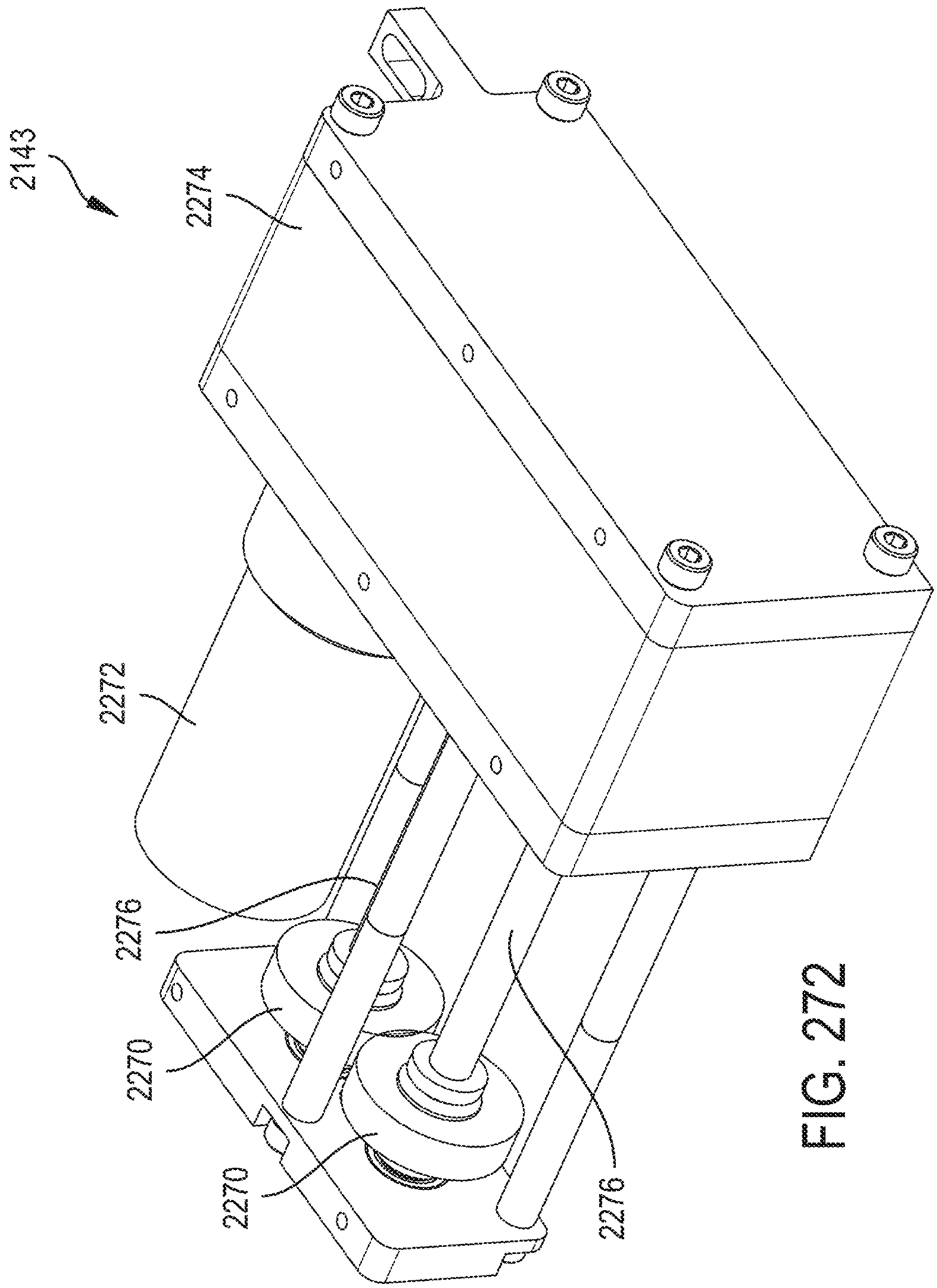

FIG. 272

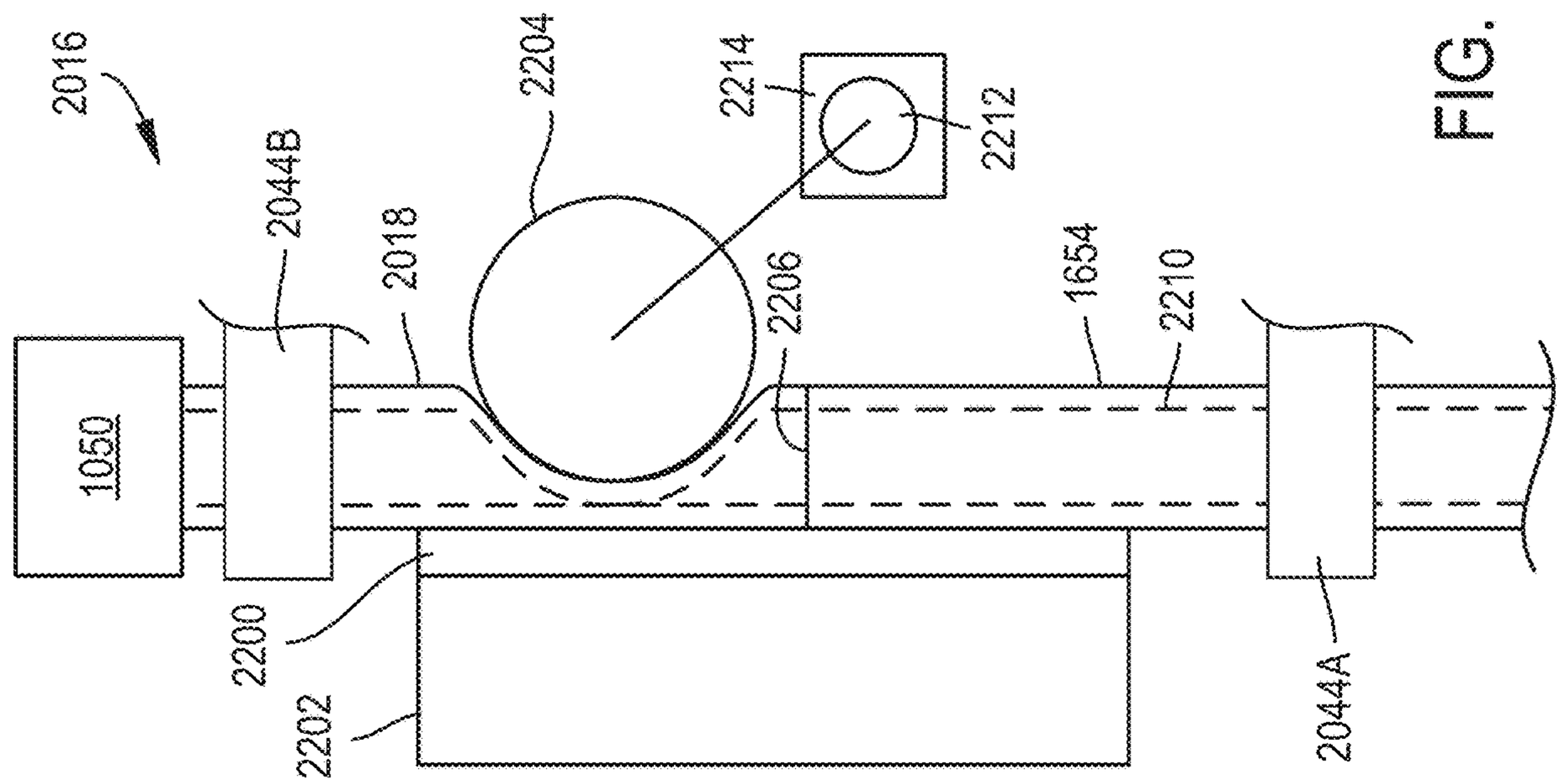

FIG. 274

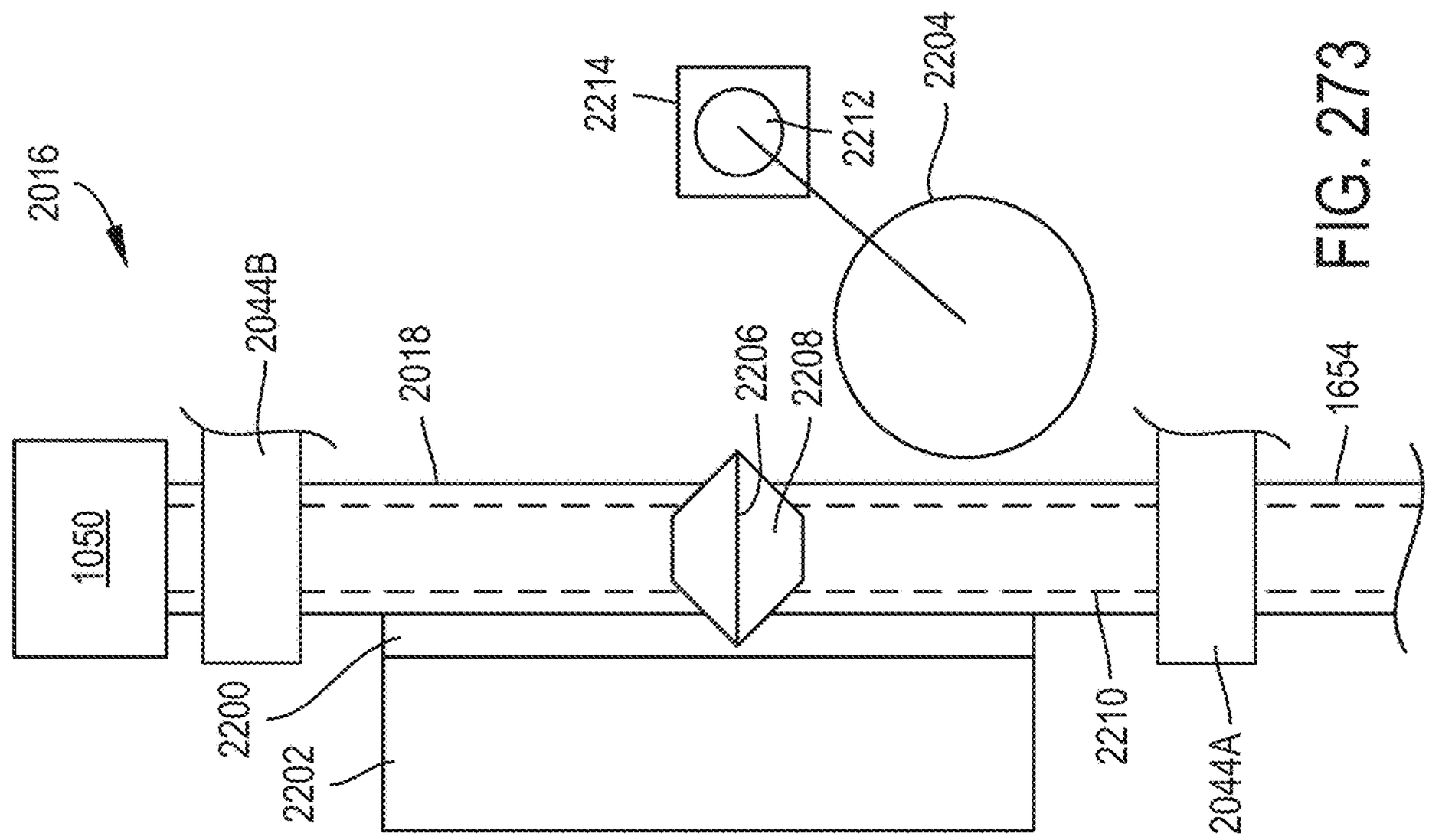

FIG. 273

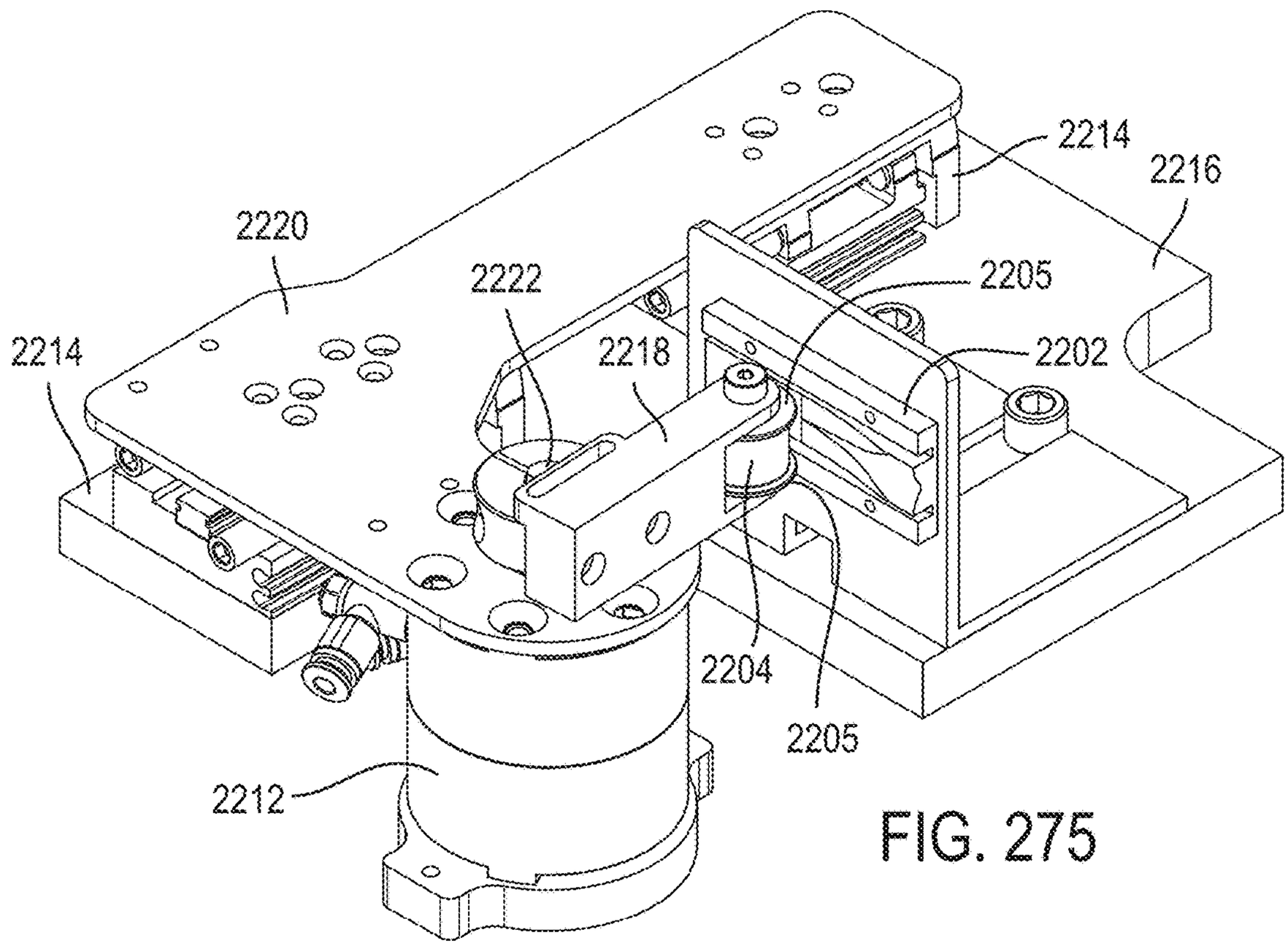

FIG. 275

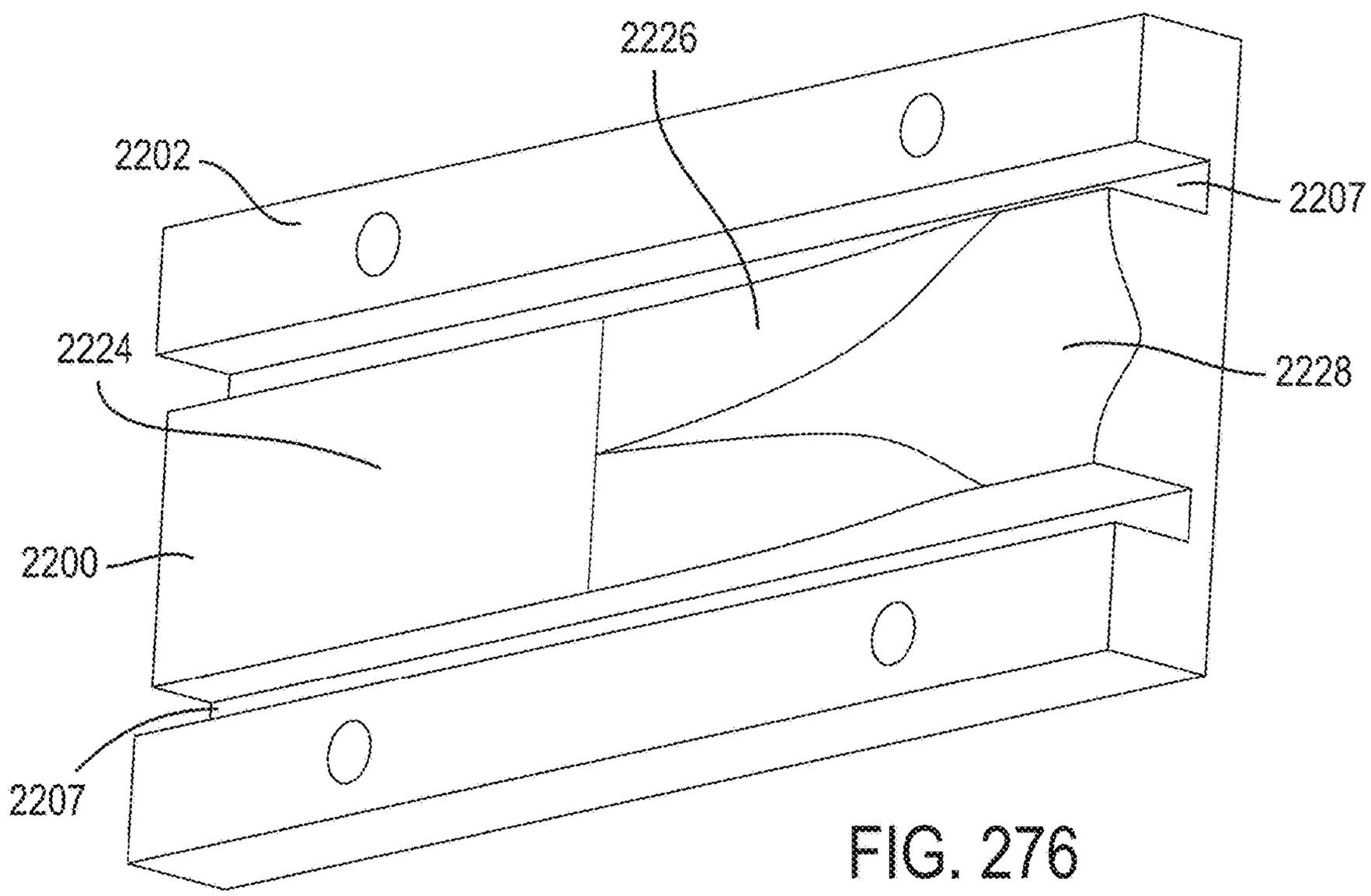

FIG. 276

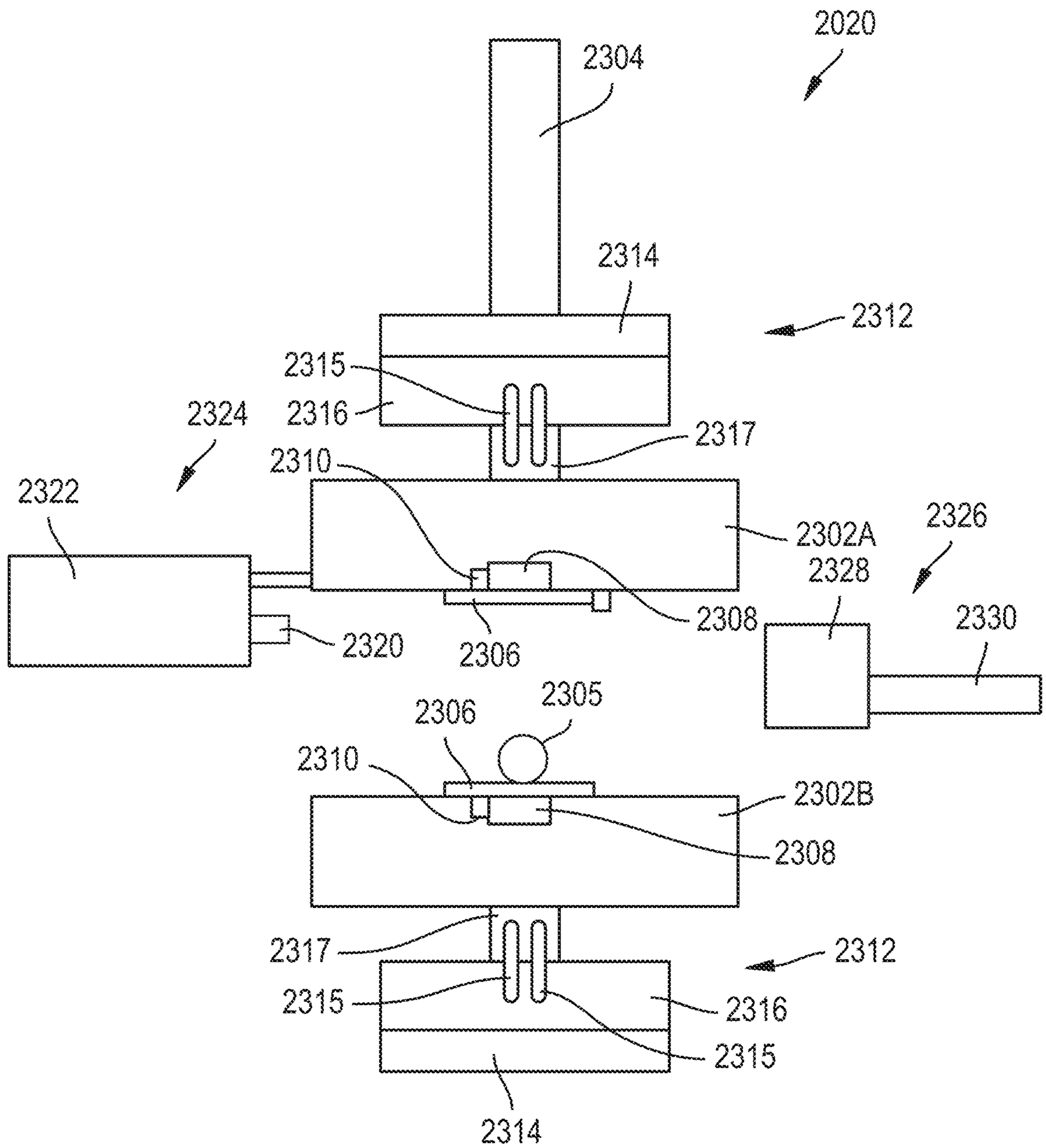
2020
2304
2314
2312
2315
2316
2324
2317
2310
2322
2302A
2326
2328
2308
2330
2320
2306
2305
2306
2310
2302B
2308
2317
2312
2315
2316
2315
2314

FIG. 277

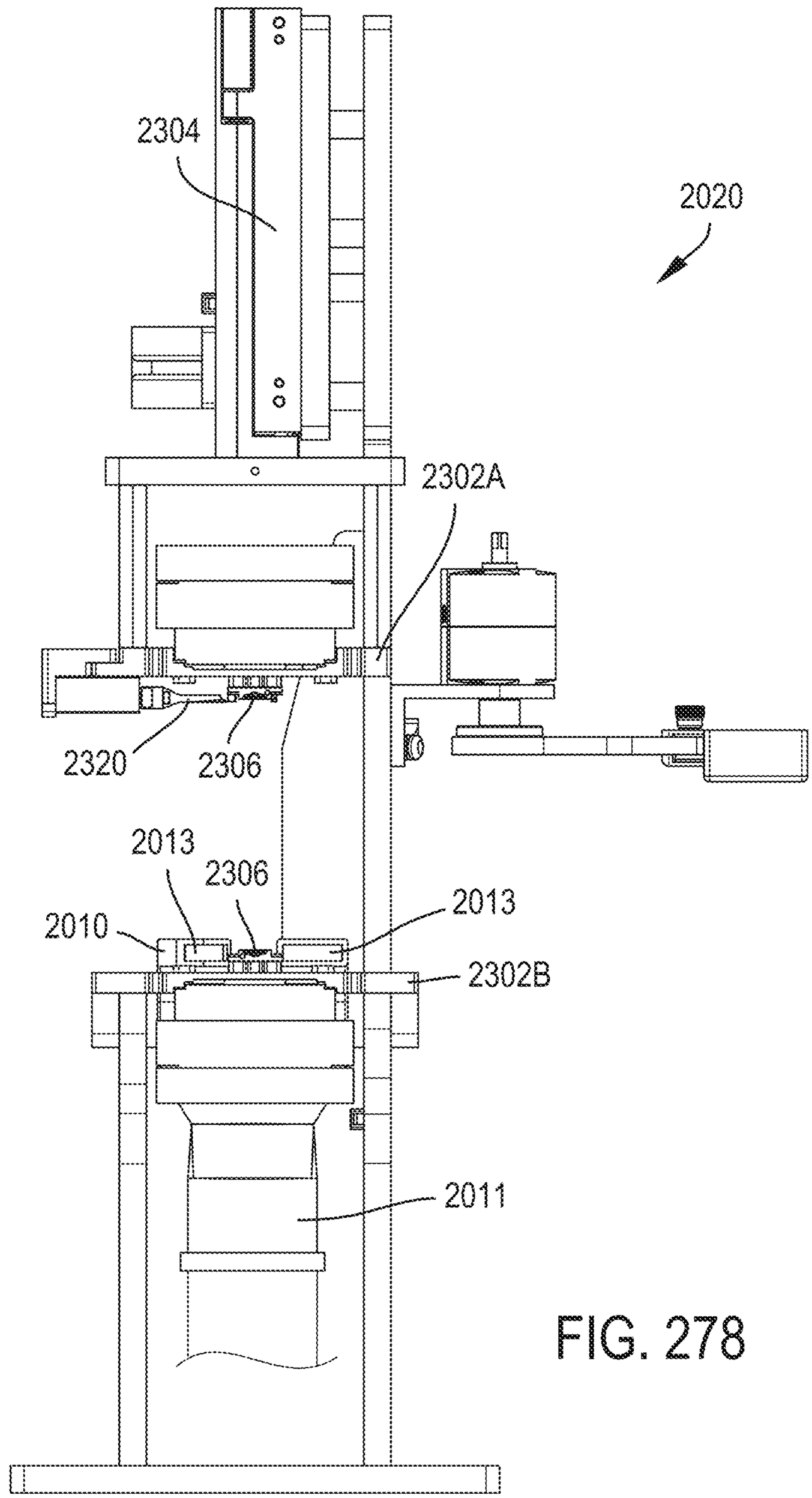

FIG. 278

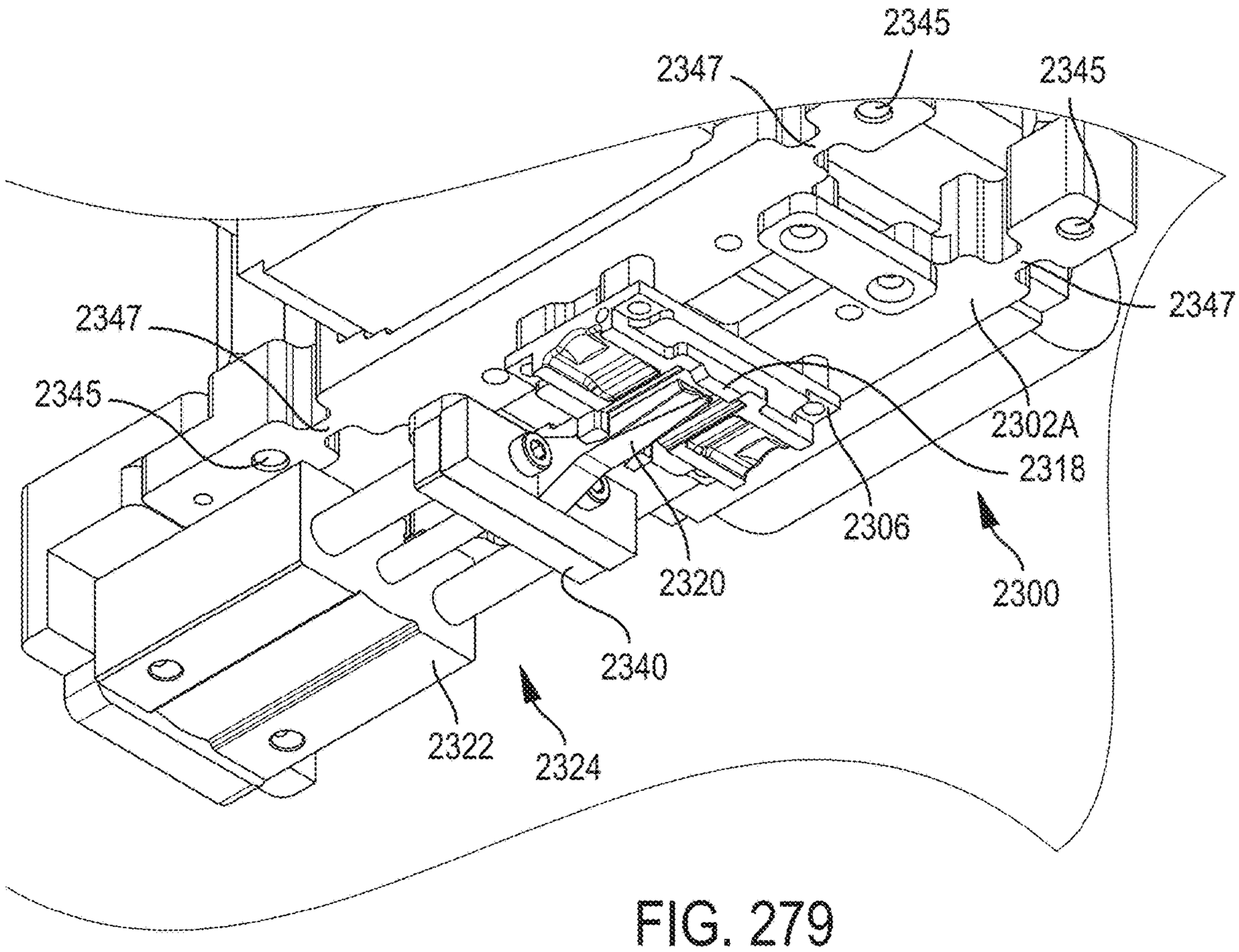

FIG. 279

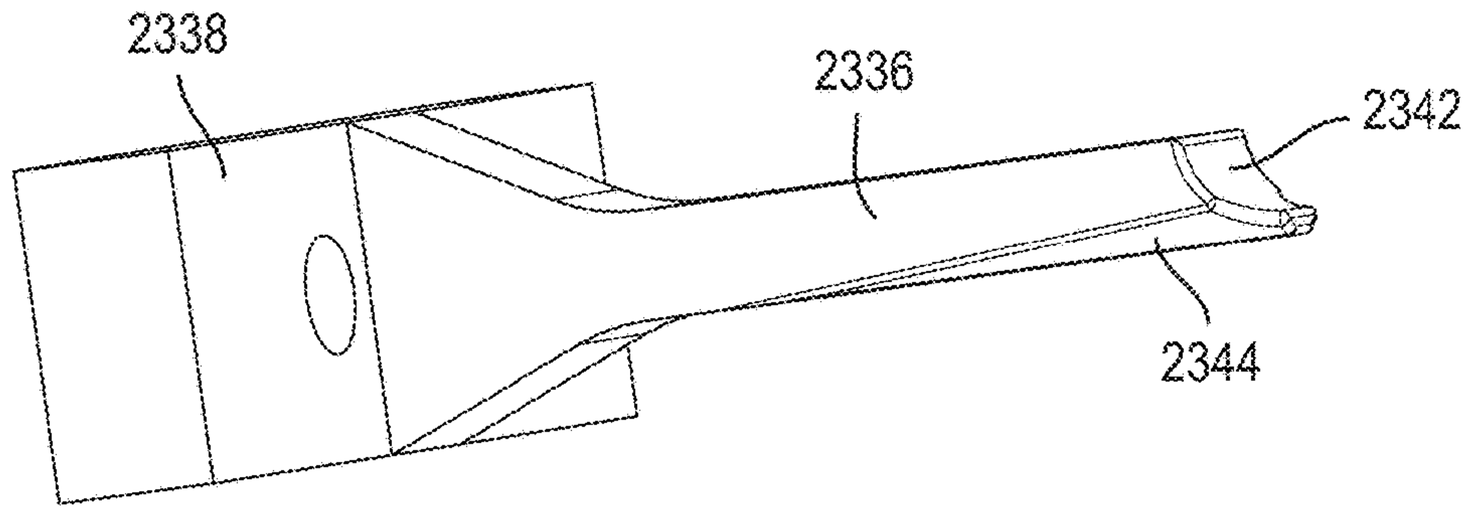

FIG. 280

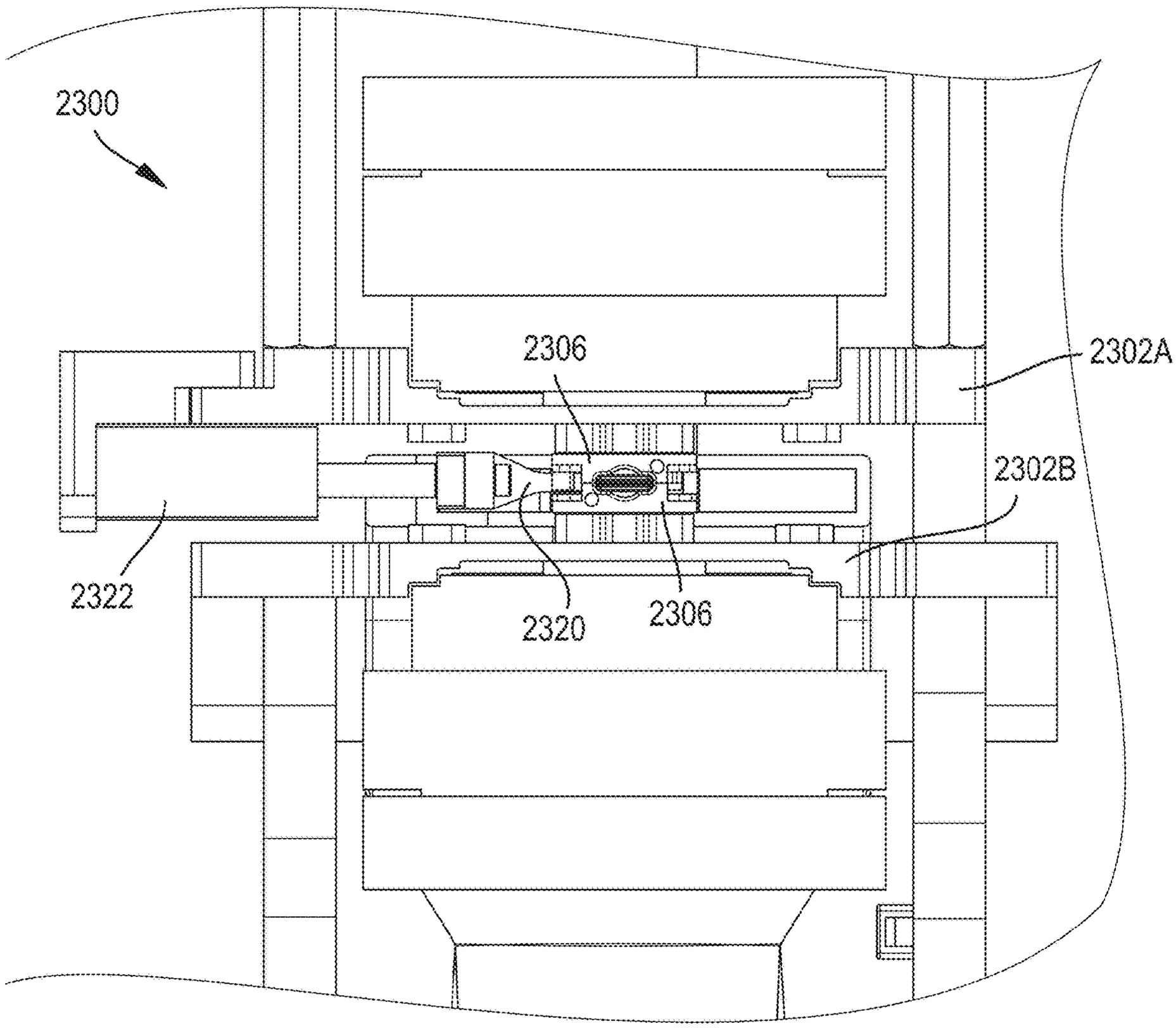

FIG. 281

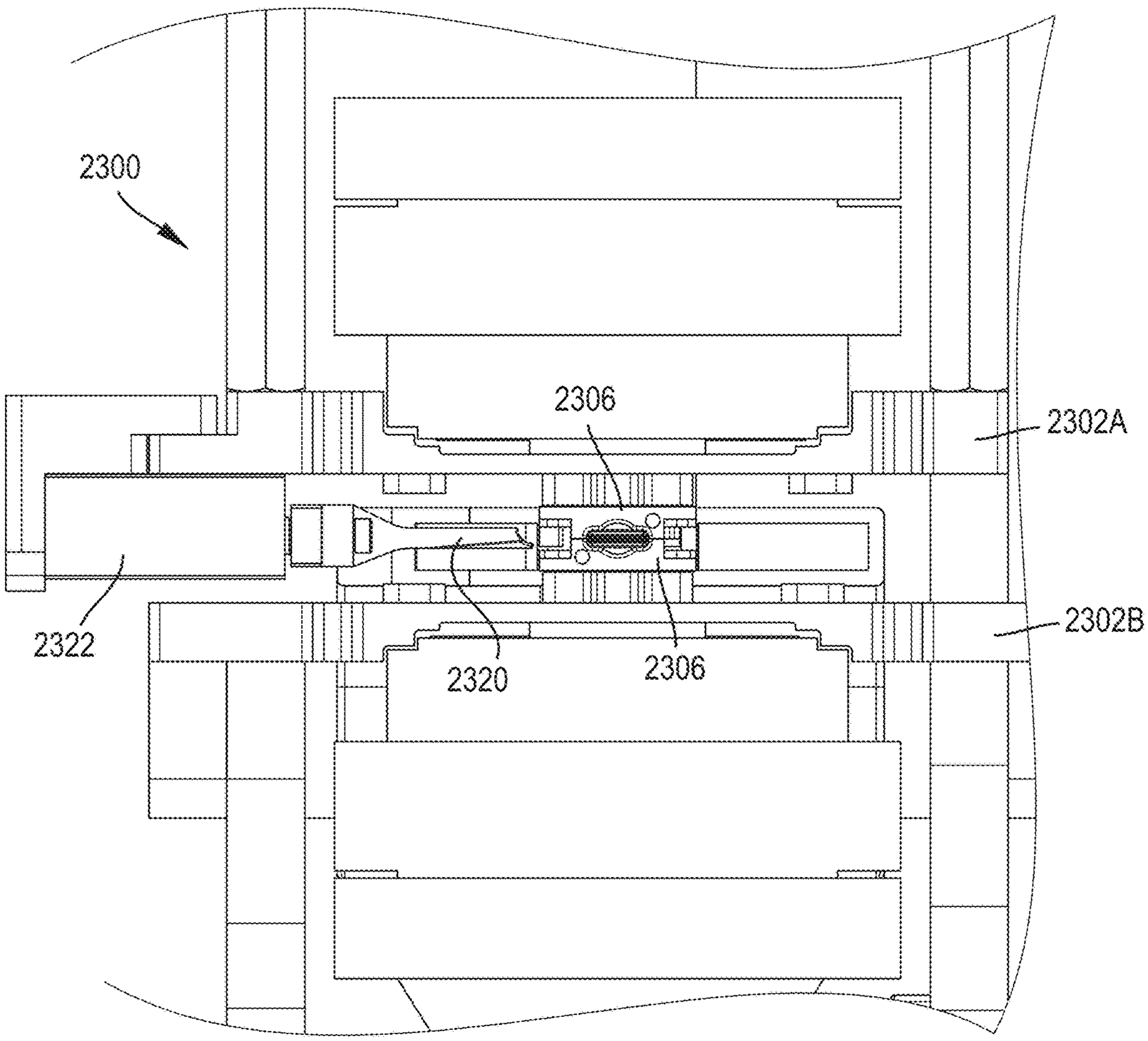

FIG. 282

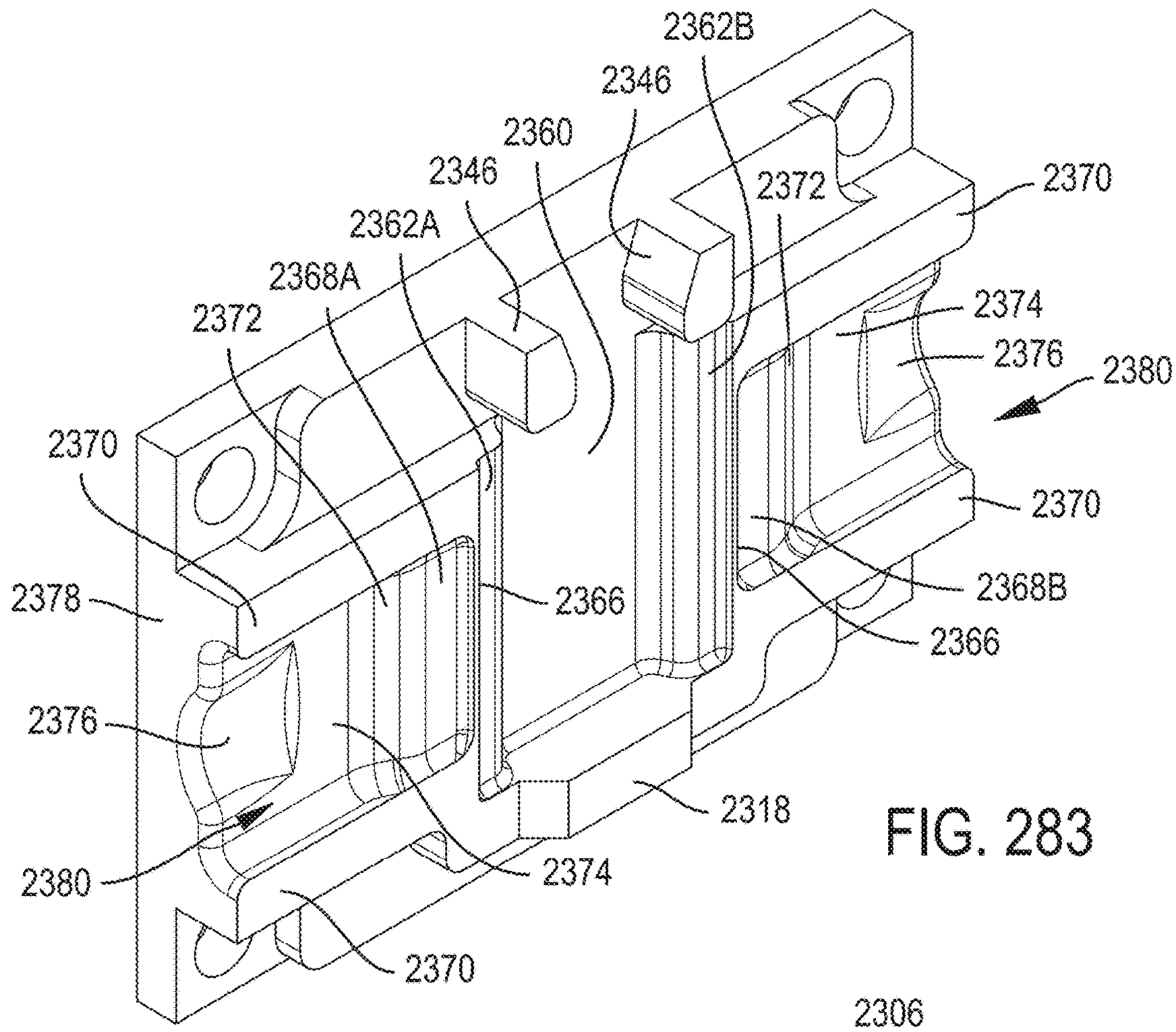

FIG. 283

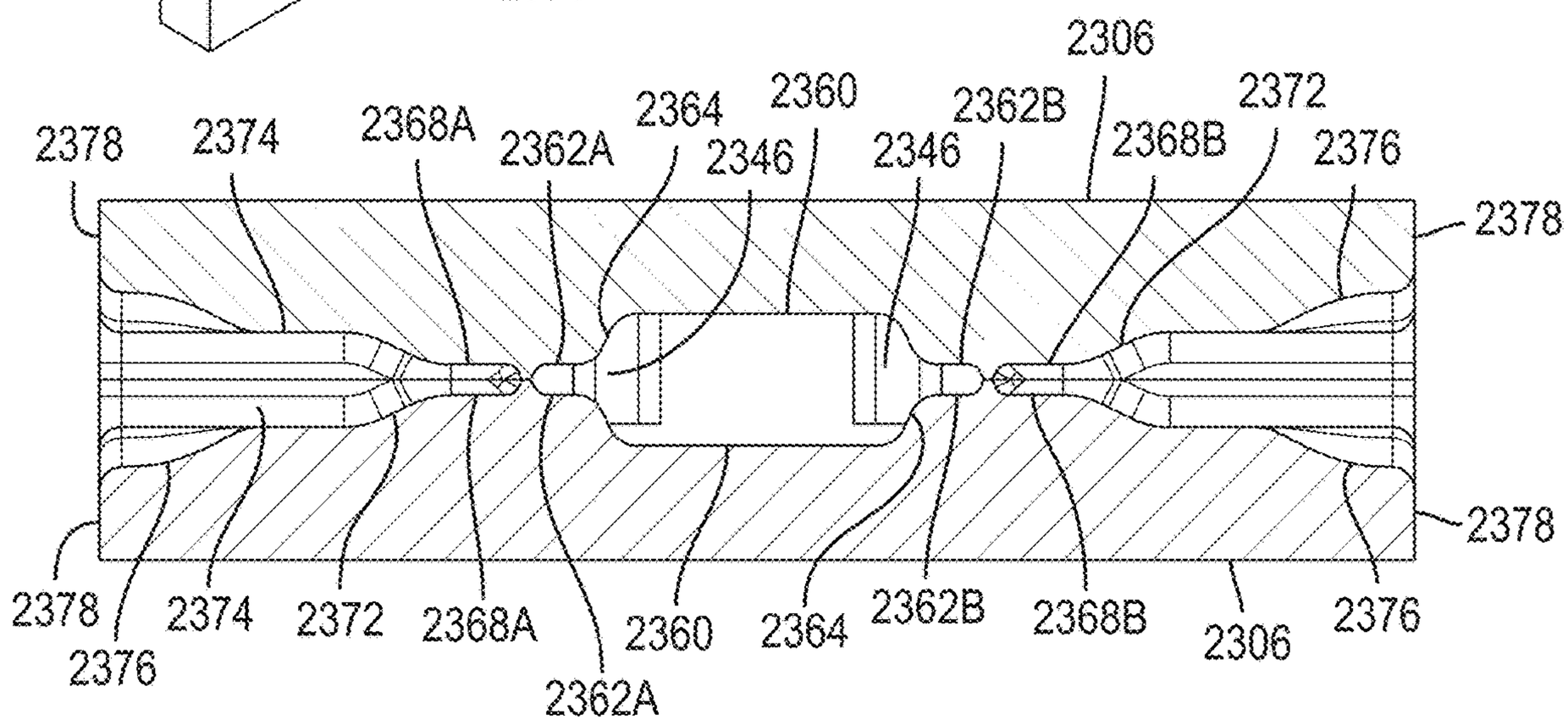

FIG. 284

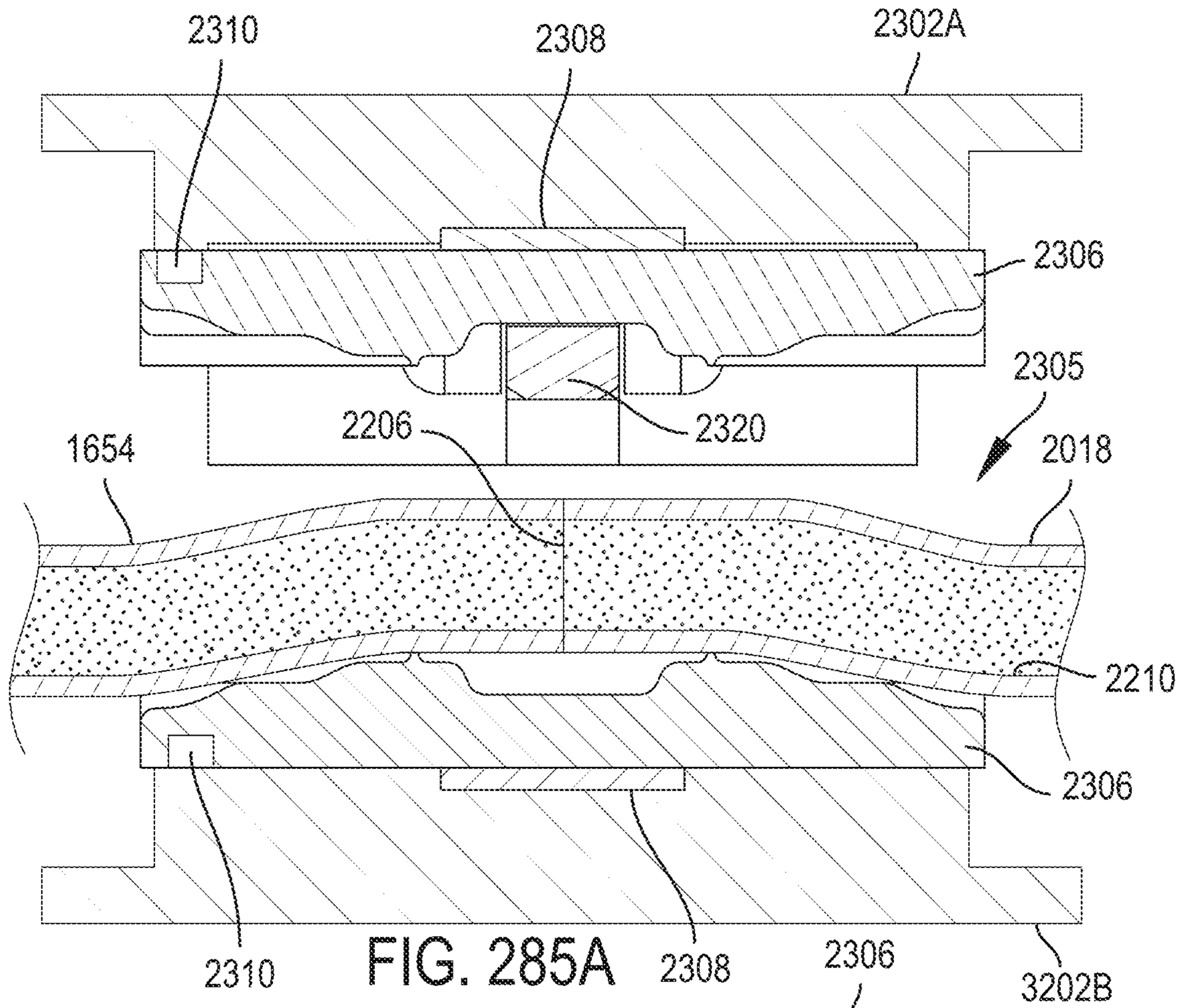

FIG. 285A

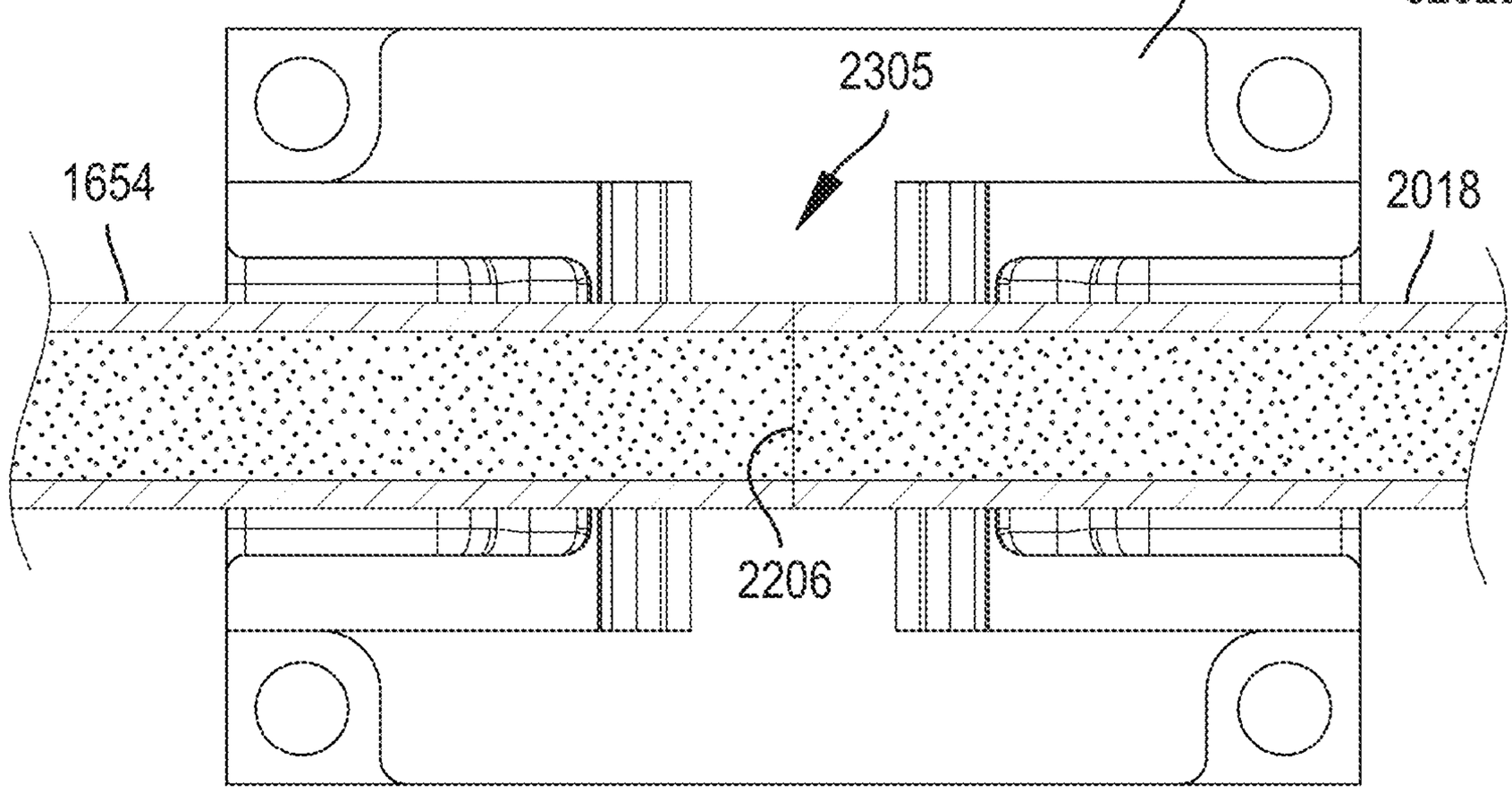

FIG. 285B

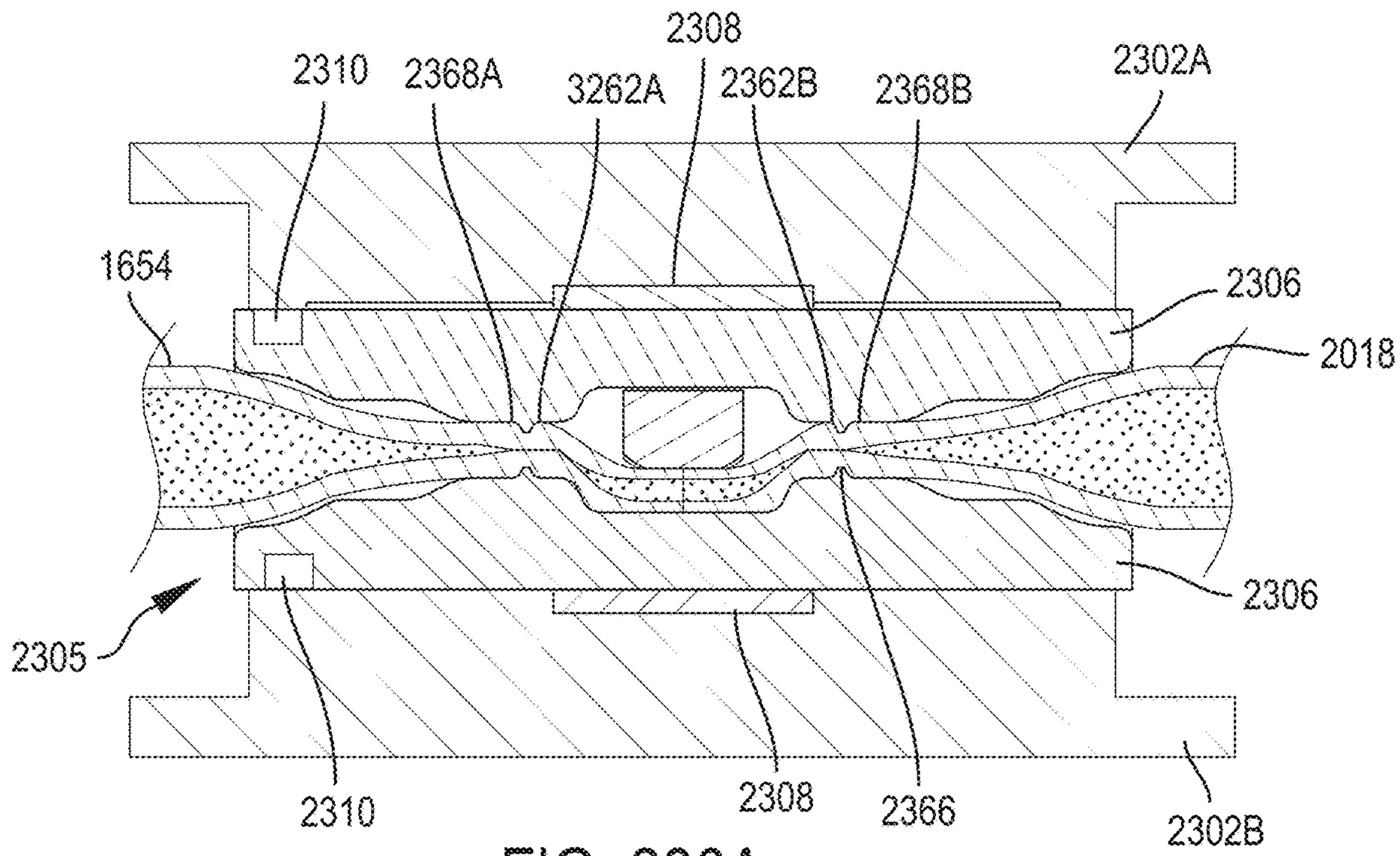

FIG. 286A

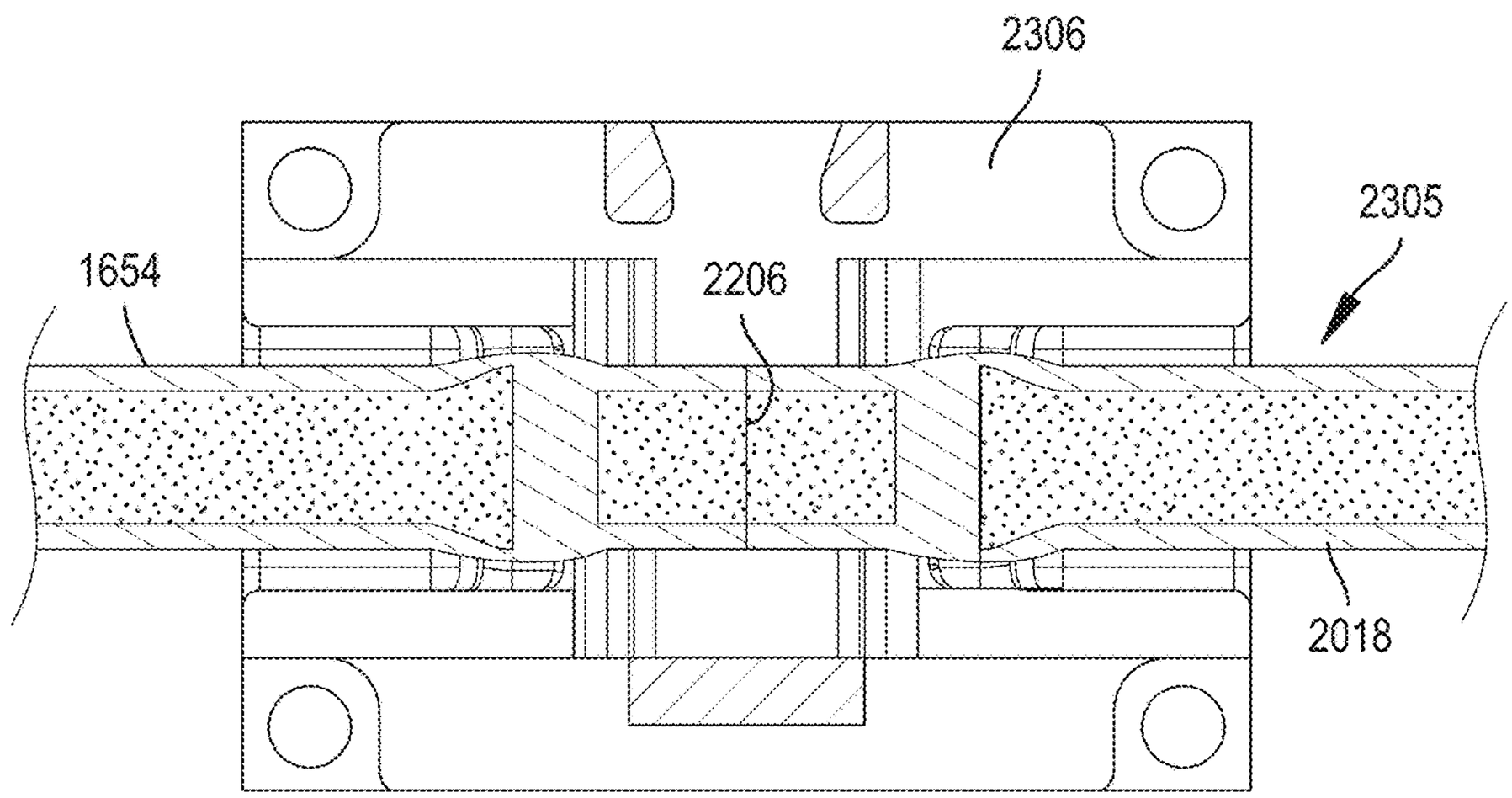

FIG. 286B

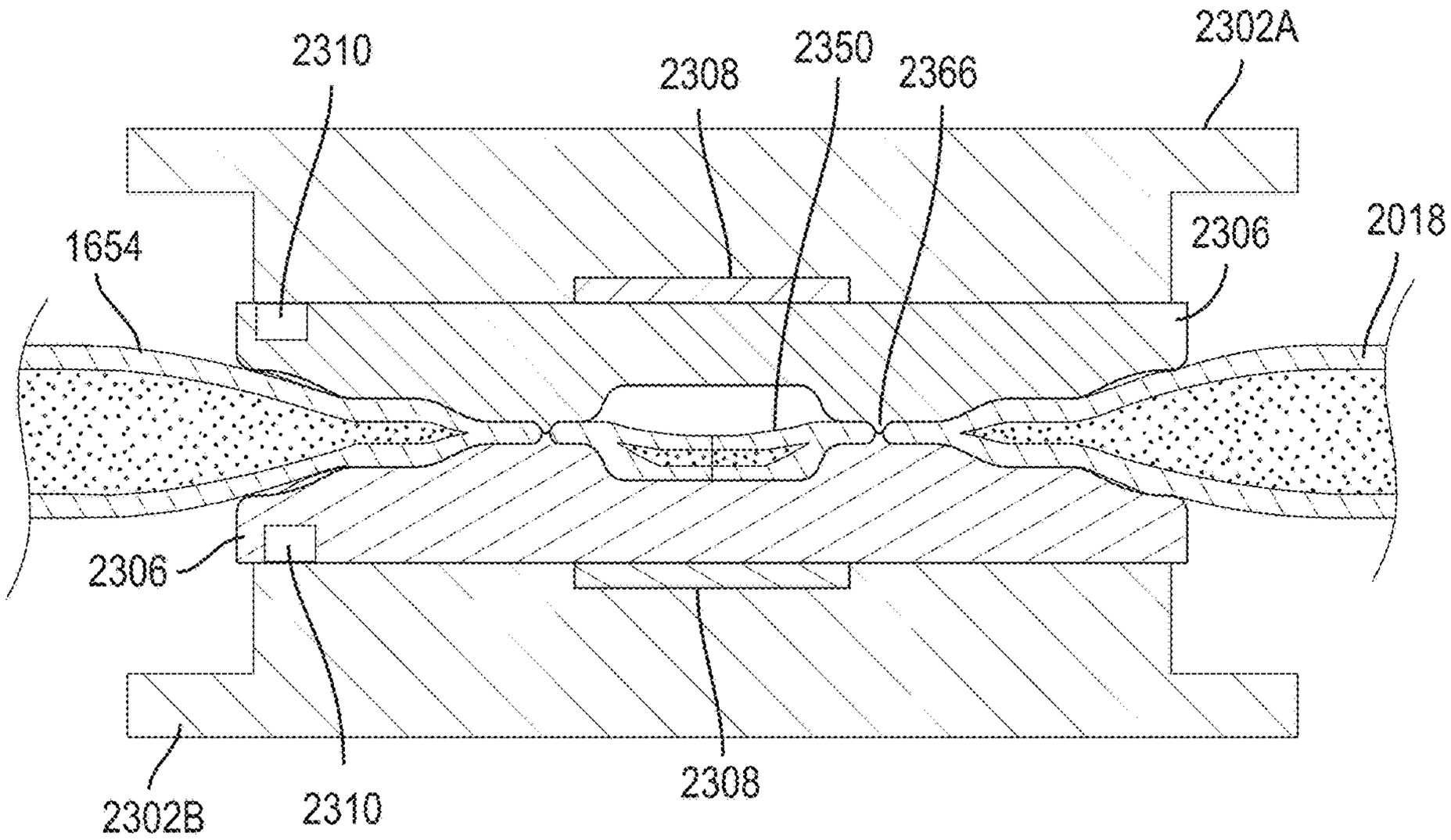

FIG. 287A

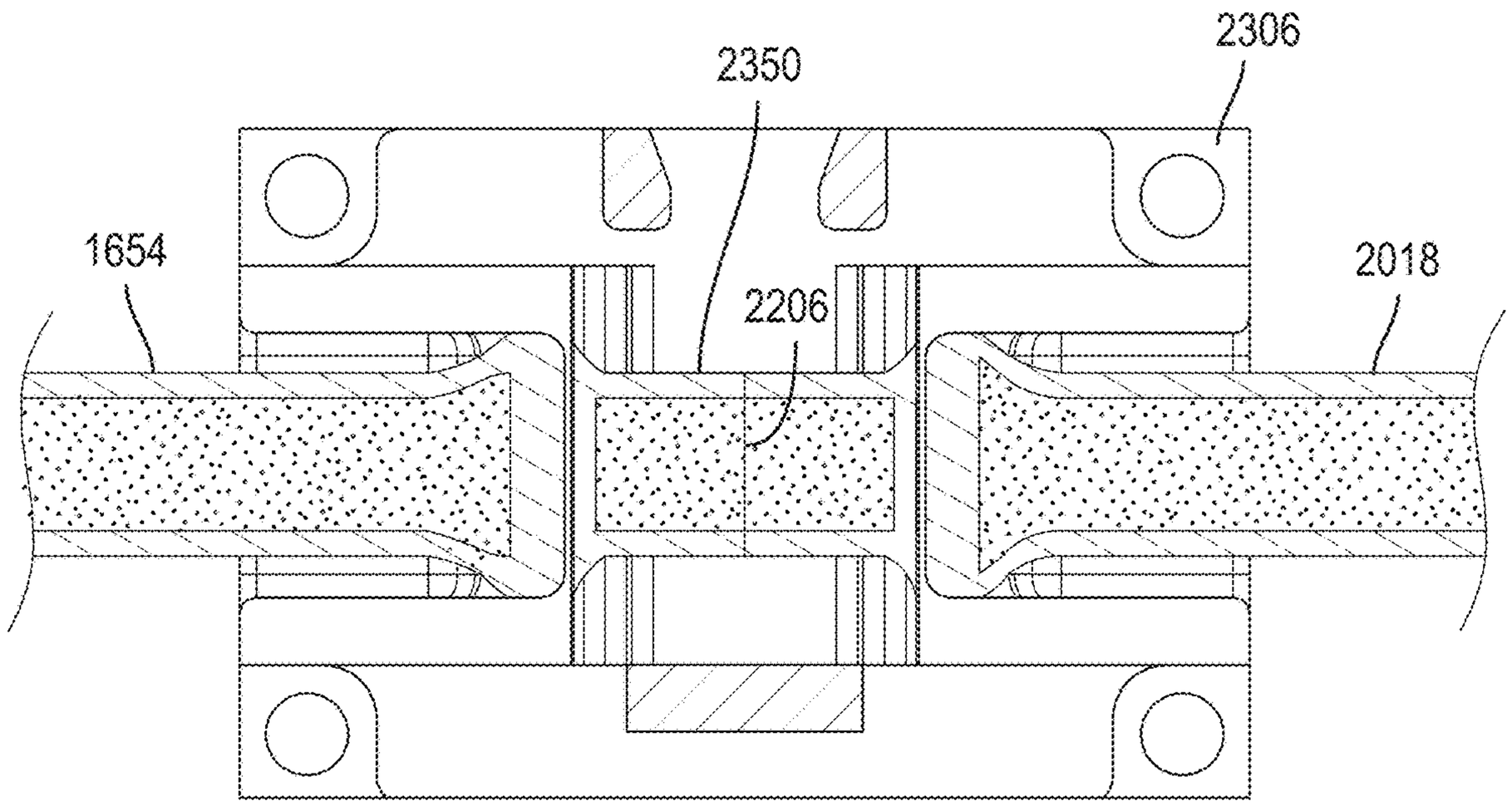

FIG. 287B

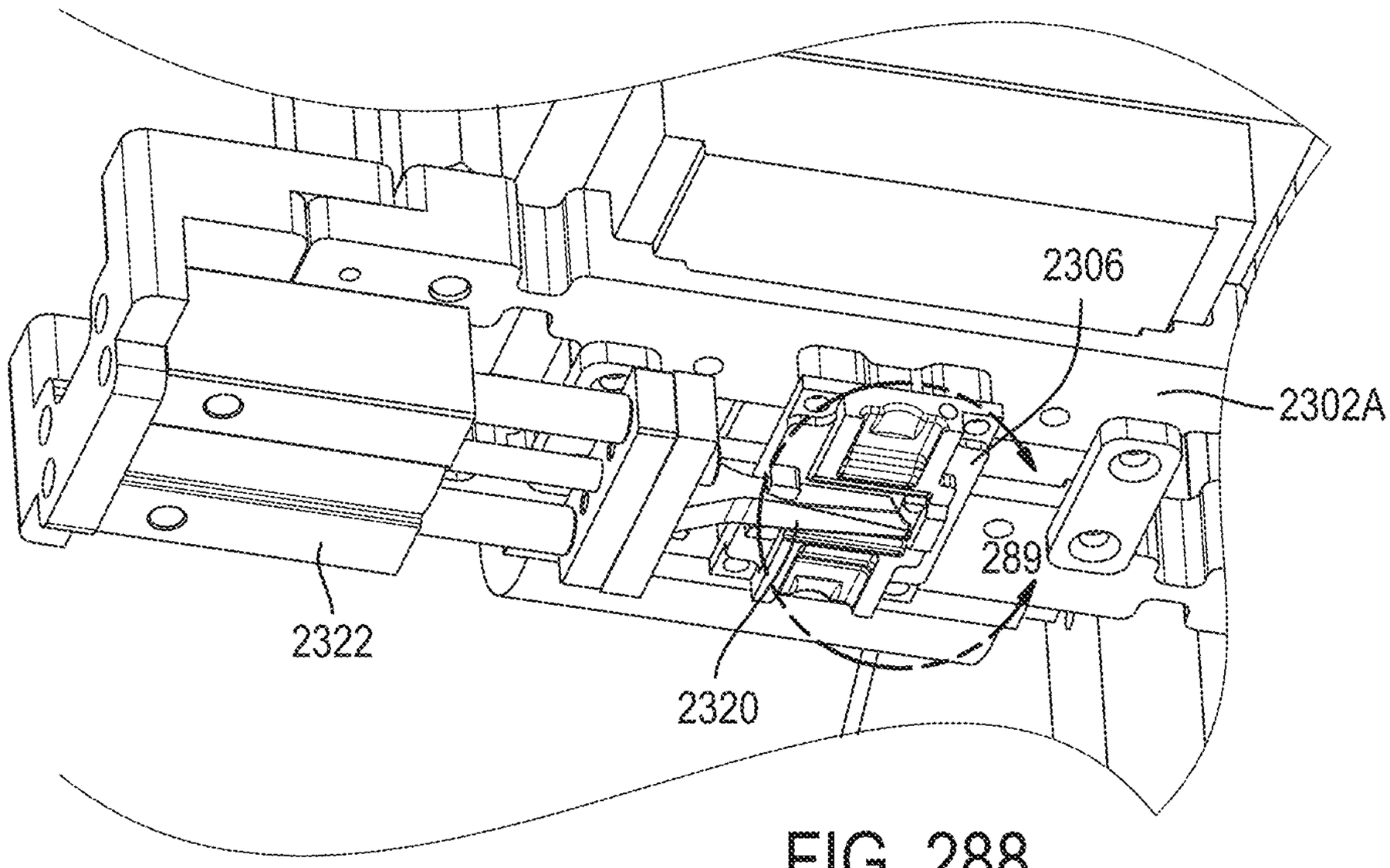

FIG. 288

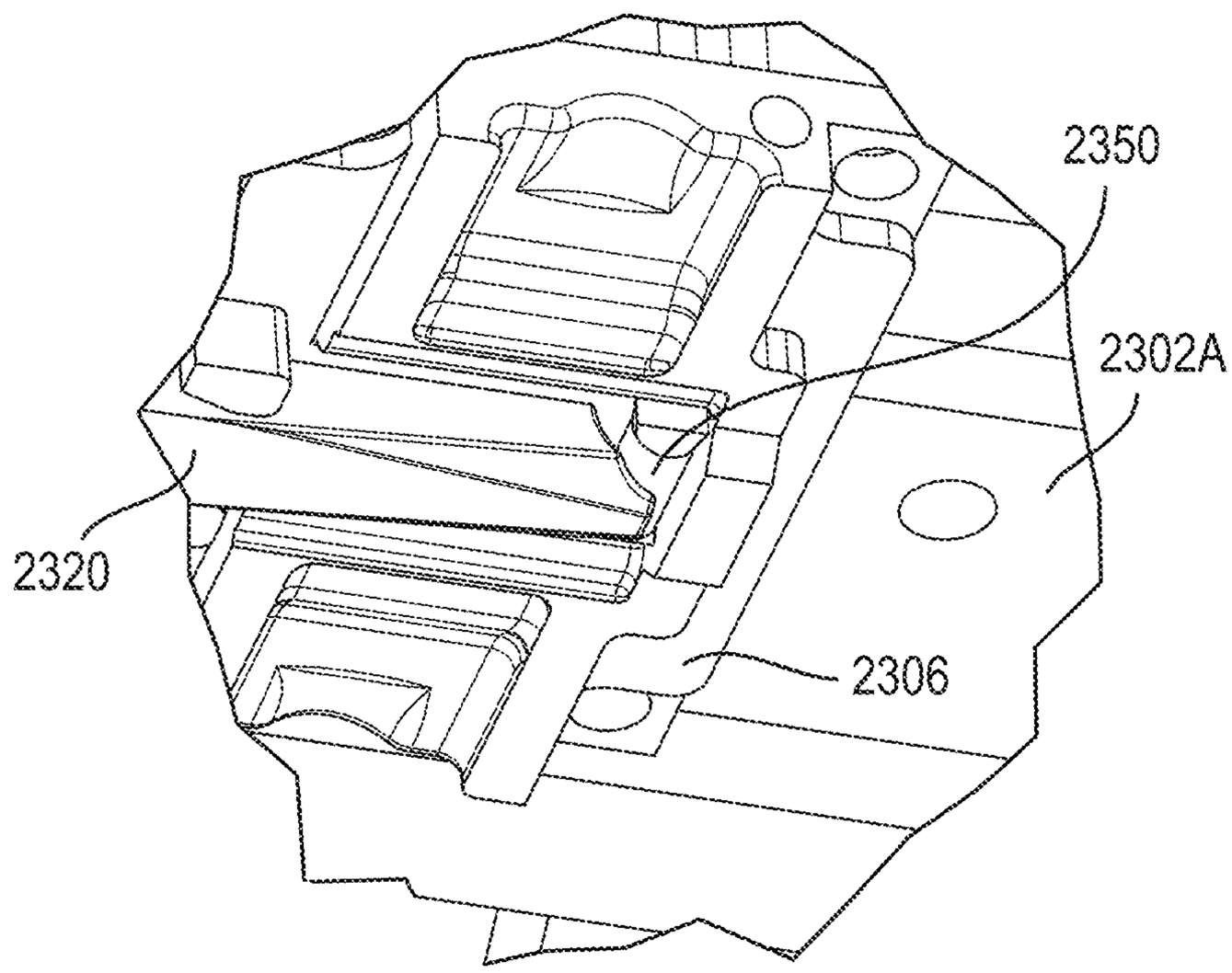

FIG. 289

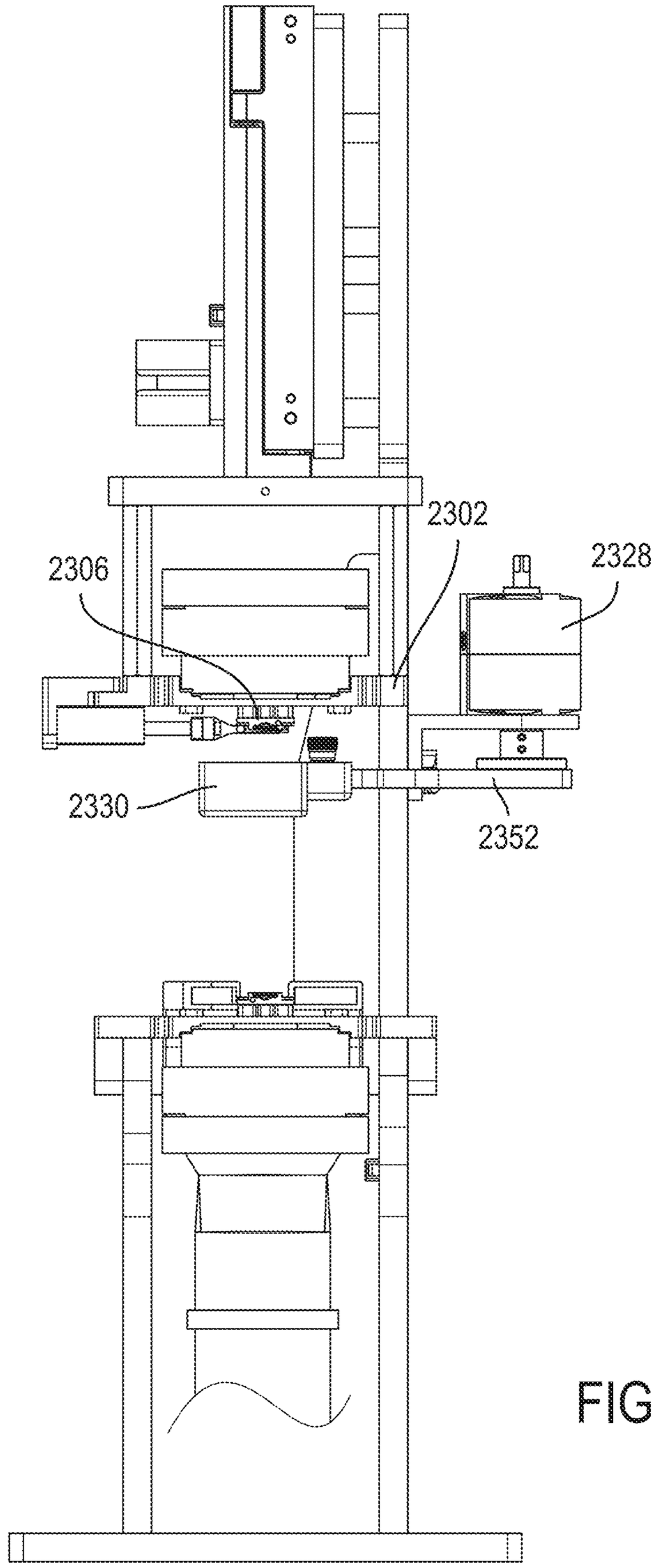

FIG. 290

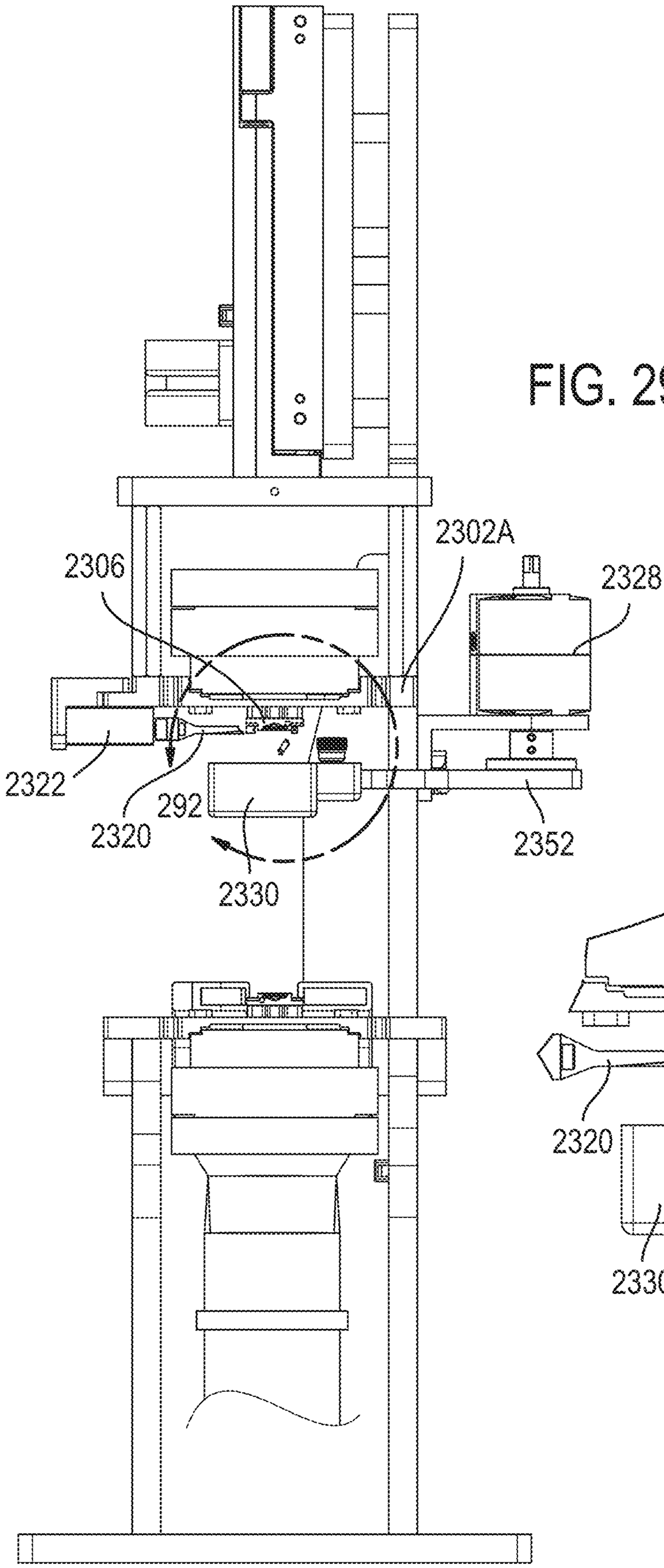

FIG. 291

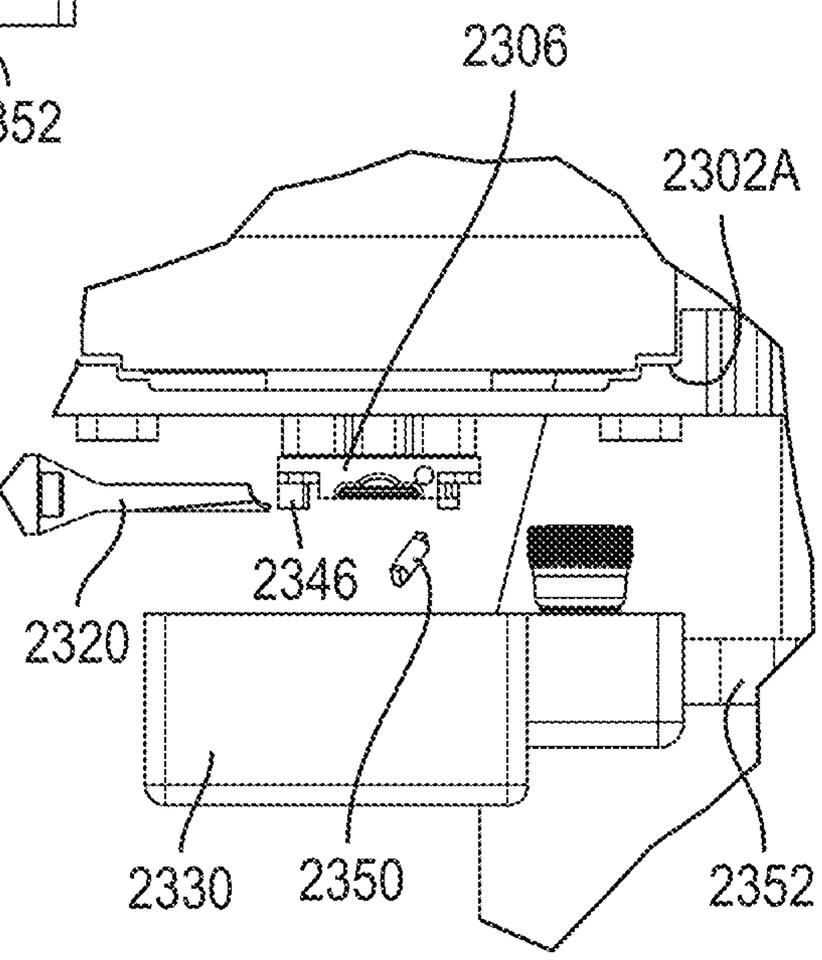

FIG. 292

SYSTEMS, METHODS, AND APPARATUSES FOR PRODUCING AND PACKAGING FLUIDS

CROSS REFERENCE TO RELATED APPLICATIONS

The present application claims the benefit of U.S. Provisional Application Ser. No. 63/118,410, entitled Systems, Methods, and Apparatuses for Producing and Packaging Fluids, filed Nov. 25, 2020, which is also incorporated by reference herein in its entirety.

STATEMENT REGARDING FEDERALLY SPONSORED RESEARCH OR DEVELOPMENT

This invention was made with Government support under Agreement HHSO100201900017C, awarded by HHS. The Government has certain rights in the invention.

BACKGROUND

Field of Disclosure

This disclosure relates to medical fluids. More specifically, this disclosure relates to the generation and packaging of medical fluids.

Description of Related Art

Almost every hospitalized patient is administered saline or a saline based solution. As a result, the quantity of saline solution consumed is very large. More than a billion bags of saline are used per year in the US alone. Despite the demand, there are only a small number of different saline manufactures which provide this solution for the US market. Unfortunately, manufacturing challenges which limit production from one manufacturer can and do cause shortages of saline in the United States. Compounding the issue, these manufactures have uneven market share in regards to all bagged saline products. For instance, 50% of 250 ml or smaller saline bags are provided by a single manufacture. As a result, when such a manufacturer faces production problems, the impact on the availability of that particular type of bag is much greater.

Most recently, the media spotlight has been shown on delays caused in the wake of hurricane Maria which have led to a shortage of small volume saline bags. According to the American Society of Health-System Pharmacists, shortages for large volume bags and bags of saline for irrigation purposes also currently exist. An alternative means of producing medical fluid bags which may perhaps be locatable in the institution using the bag would be desirable.

SUMMARY

In accordance with an embodiment of the present disclosure a constituent cartridge may comprise a first end portion having a first port and a second port which project from a main section of the first end portion. Each of the first and second ports may include a wide region proximal to the main section and a narrow region distal to the main section. The cartridge may further comprise a first cover attached to a distal end of the first port. The cartridge may further comprise a second cover attached to a distal end of the second port. The cartridge may further comprise a second end portion. The cartridge may further comprise an intermediate portion retained between the first end portion and second end portion. The first end portion, second end portion, and intermediate portion may define an interior volume of the cartridge. The cartridge may further comprise a conduit extending through the interior volume and having a first end in fluid communication with the first port via a first flow channel in the first end portion. The conduit may have a second end disposed adjacent the second end portion.

In some embodiments, the first port and second port may project from the main section parallel to one another. In some embodiments, the first port and second port may each have a longitudinal axis which extends along a plane disposed perpendicular to a longitudinal axis of the intermediate portion. In some embodiments, the interior volume may be filled with a crystalline constituent. In some embodiments, the interior volume may be filled with a crystalline salt. In some embodiments, the first cover and second cover may form a seal over the distal end of the respective first and second port and each may include at least a frangible region. In some embodiments, the wide region of the first port and second port may each include a gasket member. In some embodiments, the narrow region of the first port and second port may each include a gasket member. In some embodiments, each of the first and second port may include a first gasket member proximal to the main section and a second gasket member distal to the main section. In some embodiments, the second end of the conduit may include at least one side port. In some embodiments, the constituent cartridge may further comprise a particulate filter disposed between the interior volume and the second port. In some embodiments, the constituent cartridge may further comprise a relief valve. In some embodiments, the first end cap may include a mating shoe configured to couple to a mating interface of an actuation assembly. In some embodiments, the constituent cartridge may further comprise an identification tag. In some embodiments, the constituent cartridge further may comprise an RFID tag. The RFID tag may store at least a unique identifier for the constituent cartridge. In some embodiments, the constituent cartridge may further comprise at least one metal body disposed in the first end portion.

In accordance with another embodiment of the present disclosure a liquid concentrate generation system may comprise a manifold. The manifold may have an inlet receptacle including first piercing member. The manifold may also include an outlet receptacle including a second piercing member. The manifold may also include a flow channel connecting the inlet receptacle and outlet receptacle. The system may further comprise a cartridge having an inlet port and an outlet port sealed by a respective first and second cover. The inlet and outlet port may be respectively configured to displace within the inlet receptacle and outlet receptacle from an unspiked position to a spiked position. The first and second piercing members may be in communication with the flow channel and spaced apart respectively from the first and second cover in the unspiked position. The first and second piercing members may be isolated from the flow channel and respectively puncturing the first and second cover in the spiked position.

In some embodiments, the cartridge may have an interior volume filled at least partially with a solid constituent. In some embodiments, the cartridge may have an interior volume filled at least partially with a crystalline salt. In some embodiments, the first piercing member may include a flow lumen in fluid communication with a fluid supply flow path of the manifold. In some embodiments, the second piercing member may include a flow lumen in fluid communication

with a liquid concentrate flow path of the manifold. In some embodiments, the inlet port and outlet port may each include a wide region associated with a first gasket member and a narrow region associated with a second gasket member. In some embodiments, in the unspiked position, the first gasket members of the inlet port and outlet port respectively form a seal against the wall of the inlet receptacle and outlet receptacle and the second gasket members of the inlet port and outlet port may be out of contact with the wall of the inlet receptacle and outlet receptacle respectively. In some embodiments, in the spiked position, the first and second gasket members of the inlet port may form a seal against the wall of the inlet receptacle and the first and second gasket members of the outlet port may form a seal against the wall of the outlet receptacle. In some embodiments, the inlet receptacle and outlet receptacle may each include a wide region and a narrow region. In some embodiments, the first piercing member may be disposed more proximal the narrow region of the inlet receptacle than the wide region of the inlet receptacle and the second piercing member may be disposed more proximal the narrow region of the outlet receptacle than the wide region of the outlet receptacle. In some embodiments, in the spiked position the first piercing member may be in fluid communication with the second piercing member via a flow path from the inlet port, through an interior volume of the cartridge, and to the outlet port. In some embodiments, the system may further comprise an actuation assembly and the cartridge may be configured to couple to a mating interface of the actuation assembly. In some embodiments, the cartridge may include a particulate filter between an interior volume of the cartridge and the outlet port of the cartridge. In some embodiments, the inlet receptacle and outlet receptacle may each be in communication with an expandable volume. In some embodiments, the inlet receptacle and outlet receptacle may include an at least partially displaceable wall.

In accordance with another embodiment of the present disclosure a reservoir feeding apparatus may comprise a conveyer assembly including a motor, a belt, and a set of pulleys. The apparatus may further comprise a least one guide body. The at least one guide body may define a track extending from a first end to an opposing second end of the reservoir feeding apparatus. The apparatus may further comprise a clip stop assembly including a gate member having a displacement range from an open position to a blocking position in which the gate member obstructs access to the second end of the track. The gate member may be biased to the blocking position by a bias member. The apparatus may further comprise a position sensing assembly associated with the track configured to generate at least one data signal which alters in relationship to the position of reservoir clips along the track. The apparatus may further comprise a controller configured to power the motor based at least in part on the at least one data signal.

In some embodiments, the belt may be toothed and a pulley of the set of pulleys which is coupled to an output shaft of the motor may be toothed. In some embodiments, one of the at least one guide body may be formed in a housing which at least partially encloses the conveyer assembly. In some embodiments, the belt may extend into the track. In some embodiments, the track may be configured to accept a rail of a reservoir clip. The rail may include a cantilevered arm having a toothed projection on an unsupported end thereof. The belt may be configured to resiliently deflect the cantilevered arm when the rail is within the track. In some embodiments, the track may include one of a T-slot and a dovetail slot. In some embodiments, the apparatus further comprises a gate sensor which may be configured to generate a gate position signal indicative of the position of the gate member. In some embodiments, the motor may include a motor encoder. The motor encoder may be in data communication with the controller. The controller may be configured to power the motor based at least in part on the at least one data signal and a motor encoder data signal. In some embodiments, the bias member may be a constant force spring. In some embodiments, the bias member may be an extension spring.

In accordance with another embodiment of the present disclosure a reservoir clip may comprise a main body including a number of retention receptacles. Each of the retention receptacles may be defined between a pair of cantilevered members. The retention receptacles may each include at least one notch. The clip may further comprise a rail. The clip may further comprise a plurality of reservoirs. Each of the reservoirs may include at least one port. Each of the at least one port of each reservoir may be disposed within one of the at least one notch of a respective one of the retention receptacles. Each of the notches may be smaller than each of the ports.

In some embodiments, the plurality of reservoirs may be medical bags. In some embodiments, each of the plurality of reservoirs may have an interior volume variable between a full state and an empty state. The reservoirs on the clip may be in the empty state. In some embodiments, the rail may be a t-shaped rail. In some embodiments, the rail may be a dovetail rail. In some embodiments, the rail may include at least one toothed projection. In some embodiments, each of the at least one toothed projection may be disposed at an unsupported end of a cantilevered member included on the rail. In some embodiments, the clip may include a tier attached to and spaced apart from the main body. The tier may include a plurality of tier retention receptacles each defined between a pair of tier cantilevered members. The tier retention receptacles may each be disposed in alignment with a respective retention receptacle in the main body. In some embodiments, the clip may include a tier attached to and spaced apart from the main body. In some embodiments, the tier may include a plurality of tier cradles. Each of the tier cradles may be disposed in alignment with a notch of a respective retention receptacle of the main body. In some embodiments, the clip may include a tier attached and spaced apart from the main body, the rail extending from the tier.

In accordance with another embodiment of the present disclosure a cutting cartridge may comprise a cartridge body including a slot extending from an edge of the cartridge body to a terminal wide region of the slot in an intermediate portion of the cartridge body. The cutting cartridge may further comprise a blade element spanning across the slot between the edge and the wide region. The cutting cartridge may further comprise a removable cover clip including a set of pinch arms extending over the slot and having a width at least equal to a width of the slot. At least one of the pinch arms may include a projection more distal to the edge than the blade element. The projection may extend from the pinch arm a distance greater than a distance from that pinch arm to the blade element.

In some embodiments, the cutting cartridge may further comprise a metallic body in the cartridge body. In some embodiments, the cartridge body may be substantially planar. In some embodiments, the cartridge body may be constructed of a first body portion and a second body portion. The blade element may be captured between the first and second body portions. In some embodiments, a

second edge of the cartridge body may include a notch. In some embodiments, the blade element may be disposed at a diagonal angle with respect to the slot. In some embodiments, the cartridge body may include a set of guide pegs. At least one of the guide pegs may extend from a first side of the cartridge body and at least another of the guide pegs may extend from an opposing side of the cartridge body. In some embodiments, the blade element may be constructed of a metal. In some embodiments, the pinch arms may be coupled to one another via a bridge of material at a point between the two ends of each of the pinch arms. In some embodiments, the cutting cartridge may include an identification tag. In some embodiments, the identification tag may be selected from a list consisting of an RFID, a data matrix, and a bar code.

In accordance with another embodiment of the present disclosure a medical fluid reservoir port cutting apparatus may comprise a cartridge housing including a main portion and a projecting portion. The apparatus may further comprise a receiving slot for a cutting cartridge extending into the housing from a side of the cartridge housing. The receiving slot may extend through the main portion of the cartridge housing. A portion of the receiving slot may also extend within the projecting portion. The apparatus may further comprise a bias member. The apparatus may further comprise an arm pivotally coupled to the projecting portion of cartridge housing. The arm may be biased to a home position by the bias member and displaceable from the home position toward a cavity in the main portion which extends to the receiving slot.

In some embodiments, the receiving slot may include a set of guides. In some embodiments, each of the guides may include a detent notch. In some embodiments, at least one of the guides may extend within the projecting portion and may include a terminal recess at an end of the guide opposite the side of the cartridge housing. In some embodiments, the apparatus may further comprise a spring loaded pin which projects into the terminal recess. In some embodiments, the bias member may be a torsion spring. In some embodiments, the receiving slot may be configured to align a blade of the cutting cartridge between the cavity and the arm when the arm is in the home position and the cutting cartridge is installed within the receiving slot. In some embodiments, the apparatus may further comprise a sensor assembly adjacent the receiving slot. In some embodiments, the sensor assembly may be a cutting cartridge detector. The sensor assembly may be configured to generate an output signal indicative of whether a cutting cartridge is present or absent in the receiving slot. In some embodiments, the sensor assembly may be a beam break sensor.

In accordance with an embodiment of the present disclosure a fluid conduit dispenser may comprise a housing including a mounting body, a reel portion, and a guide portion. The dispenser may further comprise an organizer disposed within the reel portion. The dispenser may further comprise a span of conduit having a first terminal end section, an intermediate section disposed on the organizer within the housing, and a second terminal end extending out of the housing through a dispenser inlet. The dispenser may further comprise a cap element disposed at the end of the first terminal end section. The cap may include a plug body engaged with the lumen of the conduit and a guide loop surrounding the conduit and removably attached to the plug body.

In some embodiments, the guide portion may be in the shape of a conic frustum. In some embodiments, the guide portion may include an outlet opening though which the first terminal end section of the span of conduit extends. In some embodiments, the span of conduit may be at least 50 feet long. In some embodiments, the mounting body may be a rail. In some embodiments, the mounting body may be a T-rail. In some embodiments, the plug body may include a compliant member extending around an exterior surface of the plug body. The guide loop may compress the compliant member when attached to the plug body. In some embodiments, the guide loop may be frictionally retained on the plug body. In some embodiments, the guide loop may include a retention recess in an exterior surface thereof. In some embodiments, the guide loop may include a dispensing end and a feed end. The feed end may be upstream of the dispensing end. At least a portion of the feed end may be tapered so as to increase in diameter as distance from the dispensing end increases.

In accordance with an embodiment of the present disclosure, a reservoir filling assembly may comprise a fluid supply set including a supply conduit and a filling nozzle. The filling nozzle may include an inlet end to which the supply conduit is coupled, an outlet end, a midbody between the inlet and outlet ends. A lumen may extend from the inlet end to the outlet end. The midbody may be wider than the inlet and outlet ends and including variable width transition spans at each end of the midbody. The assembly may further comprise a nozzle dock including at least one bias member, a stationary portion, and a clasping body. The clasping body may be biased toward the stationary portion by the at least one bias member. Each of the stationary portion and clasping body may include a notch and transition span receptacle.

In some embodiments, the fluid supply set further may include a filter. In some embodiments, the filter assembly may be a 0.2 micron filter. In some embodiments, the midbody may be ribbed. In some embodiments, the transition span adjacent the inlet end may be rounded and the transition span receptacle of the clasping portion may be a cooperating rounded recess. In some embodiments, the transition span adjacent the outlet end may be tapered and the transition span receptacle of the stationary body may be a cooperating tapered recess. In some embodiments, the transition span adjacent the inlet and the transition span receptacle of the clasping body may form a ball and socket interface. In some embodiments, when the filling nozzle is disposed within the nozzle dock, the at least one bias member may be configured to exert a bias force on the clasping body which urges the transition spans to self-center within the transition span receptacles. In some embodiments, the outlet end of the filling nozzle may include a tapered portion at the terminal section of the outlet end.

In accordance with another embodiment of the present disclosure a method of packaging a medical fluid into a reservoir may comprise collecting a reservoir including a plurality of sealed ports from a reservoir feeder. The method may further comprise cutting a port of the plurality of sealed ports to create an opened port. The method may further comprise filling the reservoir with the medical fluid through the opened port. The method may further comprise welding the opened port to weld closed the opened port. The method may further comprise pressing the reservoir against a labeler and applying a label to the bag. The method may further comprise ejecting the bag from an environmentally controlled enclosure.

In some embodiments, collecting the reservoir may comprise grasping a portion of the reservoir with a robotic grasper and displacing the robotic grasper to pull the reservoir out of a clip. In some embodiments, cutting the port may comprise pressing the port against a blade and sweep-

ing a severed end of the port into a waste chute with a pivoting arm. In some embodiments, welding the opened port may comprise compressing the port between a first jaw and a second jaw and heating the jaws for a preset period of time. In some embodiments, cutting the port may comprise placing the port of the plurality of sealed ports into an aperture of a cutting assembly and driving a blade into the aperture via powering of a blade actuator. In some embodiments, driving the blade may comprise displacing the blade along a displacement axis. In some embodiments driving the blade may comprise rotating the blade about a pivot axis. In some embodiments, applying the to the reservoir may comprise printing the label directly on the reservoir. In some embodiments, filling the reservoir may comprise detecting at least one characteristic of the reservoir with a reservoir sensing assembly and dispensing a volume of the medical fluid determined at least in part on the at least one characteristic.

In accordance with another embodiment of the present disclosure a method of packaging a medical fluid into a reservoir may comprise collecting a reservoir from a reservoir dispenser. The method may further comprise cutting open a sealed port of the reservoir and a sealed end of a filling conduit with a heated blade. The method may further comprise joining the port to the filling conduit at a weld joint without exposing the interior of the port and filling conduit to the surrounding environment. The method may further comprise compressing the weld joint against a stationary plate with a compression element. The method may further comprise transferring fluid into the reservoir from the fill conduit through the port and into the reservoir. The method may further comprise generating occluded regions in the fill conduit and port adjacent the weld joint with a set of dies. The method may further comprise cutting the fill conduit and port in the occluded regions by heating the dies. The method may further comprise cooling the dies.

In some embodiments, heating the dies may comprise heating the dies with at least one aluminum nitride heating element. In some embodiments, generating the occluded regions may comprise compressing the fill conduit and port between sets of raised sealing surfaces defined in the dies. In some embodiments, compressing the fill conduit and port may comprise compressing the fill conduit and port to a thickness not greater than 85% of the thickness of the walls of one of the fill conduit and port. In some embodiments, compressing the fill conduit and port may comprise compressing the fill conduit and port to a thickness not greater than 75% of the thickness of walls of one of the fill conduit and port. In some embodiments, cutting the fill conduit and port may comprise compressing the fill conduit and port between the set of dies as the dies are heated. In some embodiments, compressing the fill conduit and port between the set of dies as the dies are heated may comprise apply constant pressure to the fill conduit and port with the dies. In some embodiments, heating the dies may comprise heating the dies to a cutting temperature set point in less than 10 seconds. In some embodiments, cooling the dies may comprise cooling the dies to a cooling temperature set point in less than 15 seconds. In some embodiments, cutting the fill conduit and port may comprise separating the fill conduit from the port and creating a scrap conduit span including the weld joint. In some embodiments, the method may further comprise holding the scrap conduit span in place on one of the dies with a scrap retention element and releasing the scrap conduit span into a scrap container by retracting the scrap retention element. In some embodiments, the method may further comprise compressing a portion of the fill conduit and port adjacent the occluded regions between the dies without occluding a lumen in each of the fill conduit and port in the portion of the fill conduit and port adjacent the occluded regions.

In accordance with another embodiment of the present disclosure, a clip for retaining a reservoir may comprise a main body. The main body may include a first face, an opposing second face, and a notch recessed into a sidewall of the main body. The clip may further comprise a set of retention cradles projecting from the first face. The clip may further comprise at least one spacer extending from the second face. The clip may further comprise a set of wing bodies. The wing bodies may be coupled to the main body and may extend along a plane between the second face and a portion of the at least one spacer most distal to the second face. Each of the wing bodies may include a fenestration.

In some embodiments, the clip may further comprise at least one support cradle. In some embodiments, at least one of the at least one support cradle may be flanked by a set of guide clips. In some embodiments, the set of retention cradles may include at least two retention cradles disposed in a line parallel to and adjacent an edge of the main body opposite the sidewall. In some embodiments, the at least one spacer element may project substantially perpendicularly from the second face. In some embodiments, the at least one spacer element may include a pair of substantially parallel spacer elements. In some embodiments, the spacers elements may each be disposed intermediate a set of a retention cradles on the opposing first face of the main body. In some embodiments, the main body may include a plateau portion. The notch may be recessed into the sidewall at the location of the plateau portion. In some embodiments, at least one port of a reservoir may be captured in the set of retention cradles. In some embodiments, at least one port of a bag may be captured in the set of retention cradles.

In accordance with another embodiment of the present disclosure a bag feeder assembly may comprise a housing including a guide tube receptacle and an outlet opening. The assembly may further comprise a guide tube disposed within the guide tube receptacle of the housing. The guide tube may include an outlet aligned with the outlet opening when the guide tube is installed within the guide tube receptacle of the housing. The assembly may further comprise a plurality of reservoirs. Each of the reservoirs may include at least one port having an enlarged region. The enlarged regions may be retained within a channel of the guide tube. The assembly may further comprise an advancement assembly. The advancement assembly may be configured to displace enlarged regions of ports toward the outlet of the guide tube.

In some embodiments, the advancement assembly may be configured to exert pressure upon the enlarged regions within the guide tube. The pressure may press a foremost enlarged region against a wall of the outlet opening to frictionally retain the enlarged portion at the outlet opening. In some embodiments, the housing may include an ejector. In some embodiments, the ejector may include a receptacle configured to hold an enlarged portion of a port. The ejector may be displaceable between a channel aligned position in which the receptacle is aligned with the channel of the guide tube and a present position in which the receptacle is disposed outside of the housing. In some embodiments, the ejector may be displaceable along a displacement axis which may be substantially parallel to an axis of the at least one port having the enlarged region. In some embodiments, the ejector may be displaceable along a displacement axis which may be substantially perpendicular to an axis of the at least one port having the enlarged region. In some embodiments,

the guide tube may include a set of cantilevered projections which extend toward one another from opposing sides of the guide tube. In some embodiments, the advancement assembly may include one of an electromechanical actuator, a pneumatic actuator, and a hydraulic actuator. In some embodiments, the advancement assembly may include a spring biased follower biased toward the outlet opening of housing by a bias member.

In accordance with an embodiment of the present disclosure, a reservoir clip may comprise a main body including a central span flanked on opposing first and second sides by a number of retention receptacles. Each of the retention receptacles may be defined between a pair of cantilevered members. The clip may further comprise a rail. The clip may further comprise a plurality of reservoirs. Each of the reservoirs may include at least one port. Each of the at least one port may include a clip interface body disposed in one of the retention receptacles. Each of the clip interface bodies may be form fit within the retention receptacles. The retention receptacles on the first side of the central span may be offset or staggered with respect to the retention receptacles on the second side of the central span.

In some embodiments, the plurality of reservoirs may be medical fluid bags. In some embodiments, each of the plurality of reservoirs may have an interior volume variable between a full state and an empty state. The reservoirs may be in an empty state one the clip. In some embodiments, the rail may be a t-shaped rail and the rail may project from the central span. In some embodiments, the rail may be a dovetail rail and may project from the central span. In some embodiments, the rail may include at least one toothed projection. In some embodiments, each of the at least one toothed projection may be disposed at an unsupported end of a cantilevered arm included on the rail.

In accordance with another embodiment of the present disclosure a reservoir clip may comprise a main body including a number of retention receptacles. Each of the retention receptacles may be defined between a set of cantilevered members. The retention receptacles may each including a wide region proximal the main body and a narrow region distal the main body. The clip may further comprise a rail. The clip may further comprise a plurality of reservoirs. Each of the reservoirs may include at least one port including a clip interface body disposed in the wide region of a respective retention receptacle. The narrow region of each retention receptacle may have a width which is less than the width of the clip interface bodies.

In some embodiments, the transition between the wide region and narrow region of each retention receptacle may be ramped. In some embodiments, the reservoirs may be medical fluid bags. In some embodiments, the cantilevered members may be configured to resiliently deflect. In some embodiments, the rail may include at least one toothed projection. In some embodiments, each of the at least one toothed projection may be disposed at an unsupported end of a cantilevered arm included on the rail. In some embodiments, the rail may include a detent recess. In some embodiments, the clip may further comprise a support arm extending from the main body. The support arm may have number of locating projections at an end of the support arm most distal to the main body. In some embodiments, each of the reservoirs may include a second port. The second port of each reservoir may be engaged with at least one of the locating projections on the support arm to constrain the second port of each reservoir to a known position.

In accordance with yet another example embodiment of the present disclosure, a fluid production system for producing a fluid have at least one desired characteristic may comprise a mixing circuit. The mixing circuit may have a diluent portion and concentrate portion each being in communication via respective valves with a mixing portion. The mixing circuit may have an inlet and outlet receptacle each including a piercing member. The inlet and outlet receptacle may be connected to one another via a flow channel. The system may further comprise a cartridge having an inlet port and an outlet port each sealed by a cover. The inlet and outlet port may be configured to displace respectively within the inlet receptacle and outlet receptacle from a first position to a second position. The piercing member may be in fluid communication via the flow channel in the first position. The piercing members may be isolated from the flow channel and each cover may be punctured by a respective piercing member of the piercing members when the inlet and outlet port are in the second position.

In some embodiments, the diluent portion, concentrate portion, and mixing portion each may include at least one fluid conductivity sensor. In some embodiments, the system may further comprise a controller configured to govern operation of the valves based on data from at least one of the at least one fluid conductivity sensor of the diluent portion, concentrate portion, and mixing portion. In some embodiments, the cartridge may have an interior volume filled at least partially with a solid constituent. The first piercing member may include a flow lumen in fluid communication with a diluent supply flow path of the manifold. The second piercing member may include a flow lumen in fluid communication with an inlet to the concentrate portion. In some embodiments, the system may further comprise an actuation assembly for displacing the inlet and outlet ports from the first position to the second position. The actuation assembly may be configured to couple to a mating interface of the cartridge. The actuation assembly may further comprise a cartridge detection sensor, a cartridge position sensor, and a brake. The cartridge may be inhibited from displacing when the brake is in an engaged state.

BRIEF DESCRIPTION OF THE DRAWINGS

FIG. **1** depicts a diagrammatic example embodiment of a system for producing and packaging medical fluids;

FIG. **2**A depicts a diagrammatic example embodiment of a system for producing and packaging medical fluids;

FIG. **2**B depicts a diagrammatic example embodiment of a system for producing and packaging medical fluids;

FIG. **3** depicts a diagrammatic example embodiment of a system for producing and packaging medical fluids;

FIG. **4**A depicts another diagrammatic example embodiment of a system for producing and packaging medical fluids;

FIG. **4**B diagrammatic example embodiment of a system for producing and packaging medical fluids;

FIG. **5**A diagrammatic example embodiment of a system for producing and packaging medical fluids;

FIG. **5**B depicts a diagrammatic example embodiment of a system for producing and packaging medical fluids;

FIG. **6** depicts a top down view of a multi-compartment bag containing a concentrate contained therein;

FIG. **7** depicts an exemplary bag having a partial barrier wall in its interior volume;

FIG. **8** depicts an exemplary bag having an isolated aliquot of fluid sectioned off from its main volume by a seal;

FIG. **9** depicts a flowchart detailing a number of example actions which may be executed to package fluid within a bag;

FIG. **10** depicts another example bag having a sampling reservoir disposed in an open region of its peripheral seal;

FIG. **11** depicts the example bag of FIG. **4** with the sampling reservoir isolated out of fluidic communication with the remainder of the bag;

FIG. **12** depicts an exemplary bag with a first compartment and a second compartment;

FIG. **13** depicts an exemplary bag with a seal having a perforation therein;

FIG. **14** depicts another flowchart detailing a number of example actions which may be executed to package fluid within a bag;

FIG. **15** depicts an example filling nozzle;

FIG. **16** depicts an example multi-lumen filling nozzle which may be used to fill a bag and collect an aliquot of fluid for sampling;

FIG. **17** depicts another flowchart detailing a number of example actions which may be executed to package fluid within a bag;

FIG. **18** depicts a diagrammatic example of a fill receiving set;

FIG. **19**A depicts an exploded view of an example bag having an administration set;

FIG. **19**B depicts a top down view of an example bag having an administration set;

FIG. **20** depicts a top down view of another example bag;

FIG. **21** depicts a top down view of another example bag;

FIGS. **22**A-**22**F depict views of a bag including an administration set and a filling line which is in various stages of being sealed closed;

FIG. **23** depicts a top down view of another example bag;

FIG. **24** depicts a top down view of yet another example bag;

FIGS. **25**A-C depict views of an example manifold;

FIG. **26** depicts a view of an example fill receiving set including another example manifold;

FIG. **27** depicts a perspective view of an example fill receiving set;

FIG. **28** depicts a cross sectional view of an example fill receiving set;

FIG. **29** depicts a cross sectional view of another example fill receiving set;

FIG. **30** depicts a cross sectional view of a bag of an example fill receiving set being filled with fluid;

FIG. **31** depicts a cross sectional view of an example fill receiving set with a filled bag which has been sealed out of fluid communication with the fill receiving set;

FIG. **32** depicts a cross sectional view of an example fill receiving set with a bag having been cut from the fill receiving set;

FIG. **33** depicts a cross sectional view of an example fill receiving set with a bag of the fill receiving set being filled with fluid;

FIG. **34** depicts a cross section view of an example fill receiving set;

FIG. **35** depicts a cross sectional view of an example fill receiving set;

FIG. **36** depicts a diagrammatic view of an example fill receiving set;

FIG. **37** depicts a top down view of an example manifold of an example fill receiving set;

FIG. **38** depicts a cross sectional view of an example manifold of an example fill receiving set;

FIG. **39**A-C show a progression of valve actuations of an example manifold which may be used to fill bags of an example fill receiving set;

FIG. **40** depicts an actuation block of for a manifold of an example fill receiving set;

FIG. **41**A-**41**F depict a progression of valve actuations which may be executed to pump fluid from a concentrate supply inlet through an example manifold;

FIG. **42** depicts a volume of fluid being transferred to a bag through an example manifold;

FIG. **43** depicts a diagrammatic example of another exemplary fill receiving set;

FIG. **44** depicts another diagrammatic example of an exemplary fill receiving set;

FIG. **45** depicts a number of layers of material which may be used to construct a fill receiving set;

FIG. **46** depicts access elements of a fill receiving set placed between layers of fill receiving set material;

FIG. **47** depicts a seal formed between layers of material which defines an example fill receiving set;

FIG. **48** depicts an example fill receiving set;

FIG. **49** depicts an example fill receiving set having with steam being supplied to a portion of the fill receiving set;

FIG. **50** depicts a bag being filled through an example fill receiving set;

FIG. **51** depicts an example fill receiving set with a first bag of the set being filled and severed from the set and a second bag of the set being filled with fluid;

FIG. **52** depicts an example fill receiving set with a first and second bag of the set being filled and severed from the set and a third bag of the set being filled with fluid;

FIG. **53** depicts a block diagram of an example fill receiving set production and filling system;

FIG. **54** depicts a perspective view of an example system for producing and packaging medical fluids;

FIG. **55** depicts a perspective view of the example system in FIG. **54** with portions of the enclosure depicted as transparent to reveal various internal components of the system;

FIG. **56** depicts a top down view of another example system for producing and packaging medical fluids;

FIG. **57** depicts a side view of the example system shown in FIG. **56**;

FIG. **58** depicts another side view of the example system shown in FIG. **56**;

FIG. **59** depicts a perspective view of an example bag feeder;

FIG. **60** depicts a perspective view of an example bag feeder fully loaded with bags;

FIG. **61** depicts a perspective view of an example bag feeder with a feed plate being released from a loading position;

FIG. **62** depicts a perspective view of an example bag feeder with a feed plate of the bag feeder biased against ports of bags installed in the bag feeder;

FIG. **63** depicts a bottom front perspective view of an example bag feeder having retention pins which hold bags in place within the bag feeder;

FIG. **64** depicts a bottom up view of an example bag feeder and an example grasper which has advanced to the bag feeder to retract retention pins of the bag feeder and collect a bag;

FIG. **65** depicts a perspective view of an example bag feed and an example grasper which is holding a bag collected from the bag feeder;

FIG. **66** depicts a perspective view of an exemplary bag filling station;

FIG. **67** depicts perspective view of an exemplary bag filling station with an unfilled bag being docked at the filling station;

FIG. **68** depicts a perspective view of an exemplary bag filling station having a filled bag docked at the filling station;

FIG. **69** depicts a perspective view of an exemplary bag filling station and an example grasper which has been advanced to the filling station to collect a filled bag from the filling station;

FIG. **70** depicts a perspective view of an example grasper holding a filled bag as well as a filling station with a pivotal drain inlet which is aligned with a filling nozzle of the filling station;

FIGS. **71**A-B depict top down views of a portion of a filling station have a biased drain inlet;

FIG. **72** depicts a perspective view of an example sealing station having a stopper dispenser installed therein;

FIG. **73** depicts a perspective view of an example sealing station having an example follower assembly which is disposed in a retracted position;

FIGS. **74**A-B depict perspective views of an example stopper dispenser;

FIG. **75** depicts a perspective view of an example sealing station having an example follower assembly which is biased into contact with stoppers in an example stopper magazine;

FIG. **76** depicts a perspective view of an example sealing station having an example stopper dispenser installed therein with a cover of the dispenser displaced to expose an exit port of the stopper dispenser;

FIG. **77**A depicts a perspective view of an example sealing station having an example stopper dispenser installed in a dispenser receptacle of the sealing station;

FIG. **77**B depict a detailed view of the indicated region of the FIG. **77**A;

FIG. **78** depicts a perspective view of an example sealing station with an example ram of the sealing station advanced into an example stopper dispenser to drive a stopper from the dispenser into a port of a bag in place at the sealing station;

FIG. **79** depicts a perspective view of an example sealing station with an example ram of the sealing station in a retracted position and a stopper advanced into alignment with the exit port of an example stopper dispenser via an example follower assembly;

FIG. **80** depicts a perspective view of an example sealing station and an example grasper which has collected a sealed bag from the sealing station;

FIG. **81**A depicts a perspective view of an example stopper dispenser having an exit port with a chamfered port opening;

FIG. **81**B depicts a detailed view of the indicated portion of FIG. **81**A;

FIG. **81**C depicts a cross sectional view of an example sealing station with the stopper dispenser of FIGS. **81**A-B installed therein and a port of a bag advanced partially over a portion of a stopper held in the dispenser.

FIGS. **82**A-C depict views of another example stopper dispenser having an exit port with a chamfered port opening and an exit port detent member;

FIG. **83** depicts a perspective view of another example stopper dispenser with a cover plate of the example stopper dispenser removed;

FIG. **84** depicts a top down view of an example stopper dispenser which is filled with stoppers;

FIG. **85** depicts a top down view of an example stopper dispenser which has been partially emptied of stoppers;

FIG. **86** depicts a top down view of an example stopper dispenser which is emptied of stoppers;

FIG. **87** depicts an exploded view of another example stopper dispenser;

FIG. **88** depicts a top down view of an example stopper dispenser which is filled with stoppers;

FIG. **89** depicts a top down view of an example stopper dispenser with the stopper in line with the exit port of the dispenser having been dispensed;

FIG. **90** depicts a top down view of an example stopper dispenser which has been rotated under force of a bias member to advance a stopper into alignment with the exit port of the dispenser.

FIG. **91** depicts a top down view of an example stopper dispenser which is partially emptied of stoppers;

FIG. **92** depicts a top down view of an example stopper dispenser with the stopper in line with the exit port of the dispenser having been dispensed;

FIG. **93** depicts a top down view of an example stopper dispenser which has been indexed to advance a next available stopper into alignment with the exit port of the dispenser under force of a bias member;

FIG. **94** depicts an exploded view of another example stopper dispenser;

FIG. **95** depicts a top down view an example stopper dispenser with the stopper in line with the exit port of the dispenser having been dispensed;

FIG. **96** depicts a top down view of an example stopper dispenser with a stopper advanced into alignment with an exit port of the dispenser via a bias force exerted on an example follower block of the dispenser;

FIG. **97** depicts a perspective view of an example stopper dispenser and example speed loader;

FIG. **98** depicts a perspective view of an example stopper dispenser and example speed loader;

FIG. **99** depicts a perspective view of an example stopper dispenser which has been filled with stoppers by an example speed loader;

FIG. **100** depicts a perspective view of an example quarantine repository;

FIG. **101** depicts a perspective view of an example holder which may be included in a quarantine repository;

FIG. **102** depicts a perspective view of an example quarantine repository which has been filled to capacity with bags;

FIG. **103** depicts a perspective view of an example sampling fixture having a vial installed therein;

FIG. **104** depicts a perspective view of an example vial access door and example sampling fixture with a vial installed therein;

FIG. **105** depicts a side view of an example labeling assembly and a bag being displaced to the labeling assembly by a robotic grasper;

FIG. **106** depicts a side view of an example labeling assembly with a bag in the process of being labeled;

FIG. **107** depicts a side view of an example labeling assembly with a grasper holding a bag which has been labeled at the labeling assembly;

FIG. **108** depicts a perspective view of an example output chute which may be included in a system;

FIG. **109** depicts a perspective view of a bag being deposited in an example output chute;

FIG. **110** depicts a perspective view of a bag exiting an example output chute;

FIG. **111** depicts a top down view of another example system for producing and packaging medical fluids;

FIG. **112** depicts a side view of the system shown in FIG. **111**;

FIG. **113** depicts a block diagram of an example bag dispenser;

FIG. **114** depicts another block diagram of the example bag dispenser of FIG. **113**;

FIGS. **115-117** depict views of an example bag dispenser;

FIGS. **118-121** depict views of another example bag dispenser;

FIGS. **122-124** depict views of another example bag dispenser;

FIGS. **125-127** depict views of another example bag dispenser;

FIG. **128** depicts a block diagram of an example bag dispenser and an example clip;

FIG. **129** depicts a block diagram of an example clip;

FIGS. **130-131** depict views of an example clip;

FIGS. **132-133** depict views of another example clip;

FIGS. **134-136** depict views of another example clip;

FIGS. **137-139** depict views of another example clip;

FIG. **140** depicts a view of another example clip;

FIG. **141** depicts a perspective view of an example bag feeder including a conveyer assembly;

FIG. **142** depicts a perspective view of another example bag feeder including a conveyer assembly;

FIG. **143** depicts a perspective view of another example clip;

FIGS. **144-146** depict views of another example clip;

FIGS. **147-148** depict view of another example clip;

FIG. **149** depicts a perspective view of another example bag feeder including a conveyer assembly;

FIG. **150** depicts a view of the bag feeder of FIG. **149** with a cover over the conveyer assembly removed;

FIG. **151** depicts a perspective view of an example port opening assembly with an actuated blade element;

FIG. **152** depicts a perspective view of the port opening assembly of FIG. **151** with the blade element displaced to a deployed position;

FIG. **153** depicts a perspective view of another example port opening assembly with an actuated blade;

FIG. **154** depicts a view of the port opening assembly of FIG. **153** where portions of the port cutting assembly have been hidden;

FIG. **155** depicts a perspective view of an example cutting cartridge;

FIG. **156** depicts an exploded view of the example cutting cartridge of FIG. **155**;

FIG. **157** depicts a perspective view of an example cutting cartridge with a cover clip in place around the blade element of the cutting cartridge;

FIG. **158** depicts a cross-sectional view of the example cutting cartridge of FIG. **157**;

FIG. **159** depicts a perspective view of the example cutting cartridge of FIG. **157** with the cover clip removed;

FIG. **160** depicts a perspective view of another example port opening assembly;

FIG. **161** depicts an exploded view of the example port opening assembly of FIG. **160**;

FIG. **162** depicts a top down view of the example port opening assembly of FIG. **160**;

FIG. **163** depicts a cross sectional view of the example port opening assembly of FIG. **162** taken at the indicated cut plane in FIG. **162**;

FIG. **164** depicts an exemplary grasper which may be attached to a robotic arm approaching an example port opening assembly;

FIG. **165** depicts a perspective view of a port of a bag displaced into a cutting cartridge installed in an example port opening assembly;

FIG. **166** depicts a top down view of a port of a bag being cut at a port opening assembly;

FIG. **167** depicts a view of an example filling station which may be included in a system for producing and packaging fluids;

FIG. **168** depicts an empty bag about to be grasped between jaws of an example filling station;

FIG. **169** depicts a filled bag grasped between jaws of an example filling station;

FIG. **170** depicts an example fill nozzle;

FIG. **171** depicts an example nozzle dock with a portion of the nozzle dock cut away;

FIGS. **172**A-C depict an example nozzle being installed into and retained within an example nozzle dock;

FIG. **173** depicts another example nozzle dock with an example filling nozzle retained therein;

FIG. **174** depicts a cross-sectional view of the example filling nozzle shown in FIG. **173**;

FIG. **175** depicts a perspective view of an example labeling station which may be included within a system for producing and packaging fluids;

FIG. **176** depicts a top down view of the example labeling station of FIG. **175** in which a bag is in the process of being labeled;

FIG. **177** depicts a perspective view of another example system for producing and packaging medical fluids;

FIG. **178** depicts another perspective view of the system for producing and packaging medical fluids of FIG. **177** with portions of the enclosure of the system depicted as transparent;

FIG. **179** depicts a front view of an example packaging assembly;

FIGS. **180**A-B depicts top down view of an example bag retainer;

FIG. **181** depicts a front view of an example packaging assembly with a grasper grasping a bag which is docked at an example bag retainer of the packing assembly;

FIG. **182** depicts a front view of an example packaging assembly with a grasper holding a bag which has been freed from the example bag retainer of the packaging assembly;

FIG. **183** depicts a front view of an example packaging assembly with an example robotic manipulator which as advanced a bag held by a grasper of the robotic manipulator into alignment with an example fill nozzle of the packaging assembly;

FIG. **184**A depicts a front view of an example packaging assembly with an example fill nozzle of the packing assembly in a port of a bag;

FIG. **184**B depicts an exploded view of an example filling nozzle and biasing assembly;

FIG. **185** depicts a front view of an example packaging assembly with a filled bag held by an example grasper of an example robotic manipulator of the packaging assembly;

FIG. **186** depicts a front view of an example packaging assembly with a filled bag displaced to an example sealing station of the packaging assembly;

FIG. **187** depicts a front view of an example packaging assembly with a filled bag displaced to an example sealing station of the packaging assembly;

FIG. **188** depicts a front view of an example packaging assembly with a filled bag displaced so as to insert a port of the bag into an example support cradle of an example sealing station of the packaging assembly;

FIG. **189** depicts a perspective view of an example support cradle;

FIG. **190** depicts a front view of an example packaging assembly with an example ram of the example sealing

station actuated to drive a stopper into a port of a bag disposed within an example support cradle of the packaging assembly;

FIG. **191** depicts a front view of an example packaging assembly with a filled and sealed bag held by an example grasper of an example robotic manipulator of the packaging assembly;

FIG. **192** depicts a front view of an example packaging assembly with a directing chute;

FIG. **193** depicts a perspective view of an example carrier which may contain packets each holding at least one bag and administration set;

FIG. **194** depicts a perspective view of an example carrier having an example packet removed from a compartment of the carrier;

FIG. **195** depicts a perspective view of an example carrier having an example packet removed from a compartment of the carrier, the packet having a cover flap opened;

FIG. **196** depicts a perspective view of an example carrier with an example bag and example administration set removed from a packet;

FIG. **197** depicts a perspective view of a plurality of example packets which may be placed within compartments of a carrier;

FIG. **198** depicts a perspective view of a spiking adapter which may be included with a carrier;

FIG. **199**A depicts a block diagram of an example filling station;

FIG. **199**B depicts a block diagram of another example filling station

FIG. **200** depicts a perspective view of an example filling station;

FIG. **201** depicts another perspective view of an example filling station;

FIG. **202** depicts another perspective view of an example filling station;

FIG. **203** depicts a top down view of an example spike port which may be included in a filling station;

FIG. **204** depicts a block diagram of an example fluid circuit which may be included in an example system for producing and packaging a medical fluid;

FIG. **205** depicts a block diagram of an exemplary mixing circuit;

FIG. **206** depicts a cross-sectional view of an example mixing portion of a mixing circuit;

FIG. **207** depicts a top down view of an example constituent container;

FIG. **208** depicts a cross-sectional view of the example constituent container of FIG. **207** taken at the indicated cut plane of FIG. **207**;

FIG. **209** depicts a top down view of an example inlet port which may be included in a constituent container;

FIG. **210** depicts a cross-sectional view of the example inlet port of FIG. **209** taken at the indicated cut plane of FIG. **209**;

FIG. **211** depicts a cross-section view of an example inlet port in alignment with an inlet port receptacle of an example manifold;

FIG. **212** depicts a cross-sectional view of an example inlet port in a partially installed or unspiked position within an inlet port receptacle of an example manifold;

FIG. **213** depicts a cross-sectional view of an example inlet port in a fully installed or spiked position within an example inlet port receptacle of an example manifold;

FIG. **214** depicts a perspective view of a constituent container docked on an actuation assembly which may be operated to displaced the constituent container;

FIG. **215** depicts a flowchart detailing a number of example action which may be executed to generate a desired fluid;

FIG. **216** depicts a portion of an example mixing circuit including an example crystalline constituent dispenser;

FIG. **217** depicts a dosing manifold of which may be included in an example mixing circuit;

FIG. **218** depicts a perspective view of an example crystalline constituent dispenser;

FIG. **219** depicts the example crystalline constituent dispenser of FIG. **218** with a portion broken away to shown internal components of the crystalline constituent dispenser;

FIG. **220** depicts a perspective view of an example crystalline constituent dispenser;

FIG. **221** depicts the example crystalline constituent dispenser of FIG. **220** with a portion broken away to shown internal components of the crystalline constituent dispenser;

FIG. **222** depicts a perspective view of an exemplary paddle wheel which may be included an example crystalline constituent dispenser;

FIG. **223** depicts a perspective view of an example crystalline constituent dispenser;

FIG. **224** depicts the example crystalline constituent dispenser of FIG. **223** with a portion broken away to shown internal components of the crystalline constituent dispenser;

FIG. **225** depicts a side view of an example dispensing assembly which may be included in an example crystalline constituent dispenser;

FIG. **226** depicts a cross sectional view of the example dispensing assembly of FIG. **225**;

FIG. **227** depicts a perspective view of an example dispensing disc which may be included within an example dispensing assembly of an example crystalline constituent dispenser;

FIG. **228**A depicts a perspective view of an example dispensing assembly which may be included in an example crystalline constituent dispenser;

FIG. **228**B depicts an exploded view of the example dispensing assembly shown in FIG. **228**A;

FIG. **229**A depicts a front view of another example crystalline constituent dispenser;

FIG. **229**B depicts a perspective view of the example crystalline constituent dispenser of FIG. **229**A with certain components removed;

FIG. **230** depicts a perspective view of an example port of a dosing manifold with an example outlet which may be included in a crystalline constituent dispenser docked thereon;

FIG. **231** depicts a cross sectional view of the example port and example outlet shown in FIG. **230**;

FIG. **232** depicts a side view of another example dispensing assembly which may be included in a crystalline constituent dispenser;

FIG. **233** depicts a side view of an example dispensing assembly which may be included in a crystalline constituent dispenser;

FIG. **234** depicts a side view of an example dispensing assembly which may be included in a crystalline constituent dispenser;

FIG. **235** depicts a perspective view of an example tube welding assembly;

FIG. **236** depicts another perspective view of an example tube welding assembly;

FIG. **237** depicts a perspective view of an example conduit dispenser which may be included in a tube welding assembly;

FIG. **238** depicts an exploded view of an example conduit dispenser;

FIG. **239** depicts an exploded view of an example conduit feed assembly which may be included in a tube welding assembly;

FIG. **240** depicts a perspective view of components of an example tube welding assembly;

FIG. **241** depicts a perspective view of components of an example tube welding assembly;

FIG. **242** depicts a perspective view of an example occluder assembly which may be included in an example tube welding assembly;

FIG. **243** depicts a top down view of an example occluder assembly which may be included in an example tube welding assembly;

FIG. **244** depicts a perspective view of an example occluder assembly which may be included in an example tube welding assembly;

FIG. **245** depicts a perspective view of an example cutter assembly which may be included in an example tube welding assembly;

FIG. **246** depicts a cross sectional view of a piece of tubing being occluded by an example occluder assembly and an example cutter assembly;

FIG. **247** depicts a perspective view of components of an example tube welding assembly;

FIG. **248** depicts a perspective view of an example bag sealing assembly which may be included in a tube welding assembly;

FIG. **249** depicts an exploded view of an example jaw of an example bag sealing assembly;

FIG. **250** depicts a front view of an example bag having a fill port in which a sample aliquot is being isolated by a bag sealing assembly;

FIG. **251** depicts a front view of an example bag having a sample aliquot sealed within a fill port of the bag;

FIG. **252** depict a block diagram of another example system for producing and packaging fluid;

FIG. **253** depicts a perspective view of an example embodiment of the system shown in FIG. **252**;

FIG. **254** depicts a top down view of an example embodiment of the system shown in FIG. **252**;

FIG. **255** depicts a perspective view of an example bag carriage assembly;

FIG. **256** depicts a perspective view of another example embodiment of a bag feeder;

FIG. **257** depicts a perspective view of another example clip;

FIG. **258** depicts another perspective view of the clip shown in FIG. **257**;

FIG. **259** depicts a perspective view of an example clip ejector assembly which may be included in a bag feeder;

FIGS. **260-261** depict view of an example bag feeder including the clip ejector assembly shown in FIG. **259**;

FIG. **262** depicts an example embodiment of a fluid conduit dispenser and a portion of a dispenser displacement assembly;

FIG. **263** depicts a cross-sectional view of an example cap which may be included on an end of a filling conduit;

FIG. **264** depicts a block diagram of an example conduit welding station which may be included in a system for producing and packaging fluids;

FIG. **265** depicts an example welding assembly with jaws of the example welding assembly being in an open state;

FIG. **266** depicts an example welding assembly with jaws of the example welding assembly in a closed state;

FIG. **267** depicts an example welding assembly with jaws of the example welding assembly in a closed state and conduit occluders of the welding assembly being deployed;

FIG. **268** depicts a cross-sectional view of the example welding assembly shown in FIG. **267**;

FIG. **269** depicts a cross-sectional view the example welding assembly of FIG. **267** with a cutting element deployed to cut through a conduit retained in the welding assembly;

FIG. **270** depicts a cross-sectional view of the example welding assembly of FIG. **267** with a cutting element deployed and one of the jaw units of each jaw shifted so as to align a filling conduit on one side of the cutting element with a port on another side of the cutting element;

FIG. **271** depicts a cross-sectional view of the example welding assembly of FIG. **267** with the cutting element retracted and a port joined to a filling conduit;

FIG. **272** depicts a cleaner assembly for cleaning a cutting element of a welding assembly;

FIGS. **273-274** depict block diagrams of an example weld opening station;

FIG. **275** depicts a perspective view of an example embodiment of a weld opener station;

FIG. **276** depicts a perspective view an example support plate which may be included in a weld opener station;

FIG. **277** depicts a block diagram of an example dissociation assembly for separating a fill conduit from a port of a bag;

FIG. **278** depicts a front view of an example dissociation assembly with the dies of the assembly in an open state;

FIG. **279** depicts a perspective view of a portion of an example dissociation assembly including a scrap retention element;

FIG. **280** depicts a perspective view of an example scrap retention element;

FIG. **281** depicts a front view of a portion of an example dissociation assembly in which the dies of the assembly are in a closed state and the scrap retention element is deployed;

FIG. **282** depicts a front view of a portion of an example dissociation assembly in which the dies of the assembly are in a closed state and the scrap retention element is retracted;

FIG. **283** depicts a perspective view of an example die;

FIG. **284** depicts a cross-sectional view of exemplary dies of an example dissociation assembly, the dies being in a closed state;

FIGS. **285**A-**285**B depict view of a conduit disposed between two example dies;

FIGS. **286**A-B depict view of a conduit compressed between two example dies so as to form occluded regions in the conduit on each side of a joint in the conduit;

FIGS. **287**A-B depict views of the conduit in FIG. **286**A-B after the example dies have been heated to create seals in the conduit at the occluded regions and after the dies have cut through a central region of the seals;

FIG. **288** depicts a perspective view of a portion of a welding assembly with a scrap conduit span held in place on an example die via a deployed scrap retention element;

FIG. **289** depicts a detailed view of the indicated region of FIG. **288**;

FIG. **290** depicts a front view of an example dissociation assembly in which an example scrap container has been displaced under a die of the assembly;

FIG. **291** depicts a front view of an example dissociation assembly in which an exemplary scrap retention element has been retracted to allow a scrap conduit span to fall into an example scrap container; and

FIG. **292** depicts a detailed view of the indicated region of FIG. **291**.

These and other aspects will become more apparent from the following detailed description of the various embodiments of the present disclosure with reference to the drawings wherein:

DETAILED DESCRIPTION

Referring now to FIG. **1**, a system **10** for producing and packaging medical fluids is shown. The system **10** includes an enclosure **12**. The enclosure **12** may be a clean room of any suitable certification level. The enclosure **12** may also be a housing which may be placed inside of a clean room. In such embodiments, the enclosure **12** or a compartment thereof may be constructed to conform to a higher certification level than the surrounding environment. Additionally, within the enclosure **12** there may be compartments which conform to different clean room level standards.

Within the enclosure **12**, a number of system **10** components may be housed. For example, a medical water production device **14** may be included within the enclosure **12** of the system **10**. The medical water production device **14** may be or include any suitable water production device such as a filtration device (charcoal, ultrafilter, endotoxin removal filter, reverse osmosis, microfilter, depth filter, etc.), distillation device, deaeration device (distillation devices may double as such), UV light source, chemical treatment device, exchange resin, electrodeionization unit, etc. or combination thereof. In certain embodiments, the medical water production device **14** may be a distillation device such as that described in U.S. Pat. No. 9,308,467, entitled Water Vapor Distillation Apparatus, Method, and System, issued Apr. 12, 2016 which is incorporated by reference herein in its entirety. Alternatively, the medical water production device **14** may be a distillation device such as that described in application Ser. No. 16/370,038, entitled Water Distillation Apparatus, Method, and System, filed Mar. 29, 2019, which is incorporated by reference herein in its entirety. The medical water production device **14** may generate water which conforms to various compendial specifications or may generate water adhering to some non-compendial specification. The medical water production device **14** may, for example, produce USP (or another pharmacopeia) water for injection (WFI), highly purified water, low pyrogen water, etc.

In alternative embodiments, the medical water production device **14** may not be included in the enclosure **12**. Instead, the medical water production device **14** may be in a separate enclosure within a clean room, or may in some embodiments be located in a non-clean room environment or a lower certification clean room environment than the rest of the system **10**. The output of the medical water production device **14** may be plumbed from the outlet of the medical water production device **14** to the rest of the system **10**. The medical water production device **14** may receive input water from any suitable source **16**. In some examples, this source **16** may be a municipal water supply line. In alternative embodiments, the source **16** may be a reservoir of pretreated (e.g. via filtration, UV, softened) water which the medical water production device **14** draws from. In some embodiments, the source **16** may be a large container or bladder. Where the system **10** produces a compendial fluid, the source **16** may conform to any requirements specified for acceptable sources which may be used to generate that compendial fluid. For example, the source may be EPA acceptable drinking water.

As the medical water production device **14** generates purified water, the water may be output to an outlet line **18** after being subjected to various quality testing. If any output water fails quality testing, the output water may be diverted to a discard location or recirculated to the input of the medical water production device **14** for further purification. The output line **18** of the system **10** may connect to a manifold **20**. The manifold **20** may include fluid channels and one or more valve or actuator which selectively split or direct the purified water input flow into a plurality of separate outlet fluid channels. In some embodiments, the manifold **20** may be devoid of valves and instead passively furcate the incoming purified water. The manifold **20** may include a number of couplings. These couplings may couple to manifold interface elements **22** of a fill receiving set **24**. The fill receiving set **24** may include at least one IV bag **26** and administration set **28**. The manifold interface elements **22** may be luer fittings in some embodiments. In alternative embodiments, the manifold interface elements **22** may be quick connect fitting. In some embodiments, administration sets **28** may be bonded or fixedly attached to the manifold **20** (which may include port projections extending from the manifold **20**). Manifolds **20** may also include barbed fittings over which the administration set **28** tubing is secured.

In the exemplary embodiment shown in FIG. **1**, the fill receiving set **24** includes a plurality of IV bags **26** and administration sets **28**. In such embodiments, the plurality of IV bags **26** and administration sets **28** may be bundled in a parcel or package **30** which facilitates their installation into the system **10**. In some embodiments, the package **30** may act as a dispenser which, for example, allows the topmost bag **26** and administration set **28** to be collected by a robotic grasper of the system **10**. Each fill receiving set **24** may include up to or above 50-100 bag **26** administration set **28** pairs (though anywhere from 1-50 pairs or greater than 100 pairs is also possible). The administration set **28** lengths may be chosen so as to be clinically useful, but not long enough to present an excessive impedance issue when filling in the event that the bags **26** are filled via the administration sets **28** attached thereto. In some embodiments, the administration set **28** may be about 0.75-2.5 meters (e.g. one meter). The manifold interface elements **22** may be connectors which are capable of interfacing with coupling elements on accessory tubing sets as well as the manifold **20**. Such accessory tubing sets may include extension lines, multiway connectors such as Y-sets, V-sets, and T-sets, or potentially various access ports.

As purified water is produced by the medical water production device **14**, the water may be routed via the manifold **20** to each IV bag **26** of the fill receiving set **24**. Each IV bag **26** may be filled to capacity (or a desired, preset, or prescribed amount below capacity) and then removed from the system **10**. The administration set **28** attached to each bag **26** may be left in a primed state by the system **10** (e.g. where the bag **26** is filled through the administration set **28**). In certain embodiments, the manifold interface elements **22** may be decoupled from the manifold **20** and capped by the system **10** via a multi-axis robotic manipulator. In some embodiments, a clamp may be applied to the administration set **28** or displaced to an actuating position on the set **28** before decoupling or during the decoupling operation. Alternatively, a seal may be generated in the administration set **28** tubing or other fill conduit and the tubing may be severed from the manifold **20**. This seal may be generated via heat, dielectric or RF welding, or any other suitable process. In such embodiments, the administration set **28** may include a branch upstream of the seal

location to allow access to contents in the bag **26**. In alternative embodiments, a user may manually decouple the bags **26** and administration sets **28** from the rest of the fill receiving set **24**.

The system **10** may also include a control system **15** including one or more controller. The control system **15** may govern operation of manifold actuators or valves, the medical water production device **14**, any robotic graspers and manipulators, and may use sensor data to fill bags **26** to their desired volumes. Controllers which may be used in the control system **15** may include microprocessors, FPGAs, PLCs, etc. The control system **15** may be in data communication (wired or wireless) with various sensors, manipulators, and other hardware of the system **10**.

Referring now to FIG. **2**A, the system **10** may, in some embodiments, be configured to generate bags **26** having various types of solutions. The solutions may be colloid solutions or crystalloid solutions. Solutions produced may be isotonic, hypotonic, or hypertonic in relation to physiological norms. For example, solutions may include various salt solutions such as normal saline, half normal saline, or saline of any other concentration. Solutions may also include Ringer's solution, Hartmann's solution, sugar solutions (e.g. D5W), sugar saline solutions (e.g. D5NS, 2/3 D5W & 1/3 NS), Gelofusine, Dextran, Hetastarch, albumin, Ionosteril, Sterofundin ISO, Plasma-lyte, etc. In such embodiments, the system **10** may include receptacles for one or more bulk cartridges or reservoirs **40**, **42** of concentrate or crystalline precursor. These bulk cartridges **40**, **42** may communicate with fluid lines which lead to pumps **38**, **36**. The pumps **38**, **36** may meter specific volumes of concentrates into the output of the medical water production device **14**.

The medical water production device **14** output stream may also be pumped by a pump **46** to monitor the amount of fluid being mixed with any concentrate introduced from the bulk reservoir(s) **40**, **42**. In some examples, an accumulator or storage volume (not shown) may be included to maintain a supply of medical grade water such that solution may be produced at a rate faster than the output rate of the medical water production device **14** if commanded. This accumulator volume could be maintained within the medical water production device **14** in certain embodiments.

A mixing volume **34** may be included in the system **10** to ensure any concentrate and water are evenly mixed before progressing to the fill receiving set **24**. This mixing volume **34** may have an interior including various baffles or obstacles which break up incoming flow and promote mixing of fluid within the mixing volume **34**. The mixing volume **34** may also include an expanse of tubing which may present a long/and or tortuous path that encourages even mixing. A check valve **32** may also be included on the output line **18** from the medical water production device **14** to prevent any back flow of mixed solution to the medical water production device **14**. Control of various valves **36**, **38**, **46** and pumps of the system **10** may be orchestrated via the control system **15**.

In some embodiments, and as shown in FIG. **2**B, the medical water production device **14** may have an output which may communicate with bulk cartridges **40**, **42** containing concentrate in a crystalline form. The output of the medical water production device **14** may pass through the bulk cartridges **40**, **42** and exit as a saturated or nearly saturated solution. A pump **45** may be provided to aid in delivery of the output stream of the medical water production device **14** through the bulk cartridges **40**, **42**. Fluid exiting the bulk cartridges **40**, **42** may be subjected to composition monitoring (e.g. conductivity sensing, temperature sensing, polarimetry sensing, etc.) which may inform the control system **15** determined downstream mixing ratios effected by pumps **38**, **36**.

Referring now to FIG. **3**, a system **10** for producing and packaging medical fluids is shown. The system **10** is configured to fill individual bags **26** as opposed to filling through a fill receiving set **24**. As the medical water production device **14** in FIG. **3** generates purified water, the water may be output to an outlet line **18** after being subjected to various quality testing. The output line **18** of the system **10** may connect to a filling nozzle or dispenser **1421**. The dispenser **1421** may include a tapered outlet which may be introduced into an inlet of a bag **26** or other destination container. Alternatively, the dispenser **1421** may include a fitting (e.g. luer lock, quick connect, etc.) which mates with a fitting on a destination container.

In the exemplary embodiment shown in FIG. **3**, the system **10** includes a plurality of IV bags **26** which may be included in a bag feeder **128**. In such embodiments, the plurality of IV bags **26** may be included in a cartridge or dispenser such as a magazine **1431** (or, e.g., any clip **1700** described herein) which facilitates their installation into the system **10**. In some embodiments, the magazine **1431** may act as a dispenser which, for example, allows the foremost bag **26** to be collected by a robotic manipulator **1423** of the system **10**. Any suitable robotic manipulator **1423** may be included, for example, one or more multi-axis robotic arm may be included. Each magazine **1431** may hold, for example, 10-50 bags **26** though magazines **1431** having a capacity for a greater or lesser number of bag **26** may also be used.

In some embodiments, bags **26** may be provided in an over pack **60** which may be a sealed bag, pouch, or blister pack in certain embodiments. The over pack **60** may be cleaned (e.g. with 70% isopropyl alcohol or another suitable agent) and introduced into the enclosure **12**. Individual bags **26** may then be withdrawn from the over pack **60** manually or in an automated fashion (via a robotic manipulator **1423**) and installed in a magazine **1431** included in the system **10**. One or more pre-loaded magazine **1431** full of bags **26** may also be provided in an over pack **60**. Pre-loaded magazines **30** may be removed from the over pack **60** and installed in the bag feeder **128** as needed. In alternative embodiments, bags **26**, magazines **1431**, and any other consumable components may be introduced to the enclosure **12** via an alpha port and beta container arrangement (see, e.g., FIG. **111**).

In some embodiments, various protective caps or films may be included over some components of the bags **26**. For example, a film or cap may be included on ports of the bags **26**. This may facilitate establishment of aseptic connections if manipulation of the bags **26** after being removed from the over pack **60** is needed to install bags **26** into the system **10**. The caps or film may be removed shortly before connection or installation to the system **10**. Alternatively, the film or cap may be pierced through during filling. In other embodiments, bags **26** may be introduced into an enclosure **12** with their ports in a sealed state. The ports may be opened (e.g. cut) to gain access to the interior volume of the bags **26**.

As purified water is produced by the medical water production device **14**, the water may be output by the dispenser **1421** to each IV bag **26**. The robotic manipulator **1423** may collect bags **26** from the bag feeder **128** (to which a magazine **1431** or clip **1700** may be docked) and displace them to the dispenser **1421** for filling. Each IV bag **26** may be filled to capacity or some other desired volume and then removed from the system **10** or placed in a quarantine **1425**

while various testing on fluid output from the dispenser **20** is completed. In some embodiments, a seal may be generated in the fill conduit leading to the bag **26**. This seal may be generated via heat, dielectric or RF welding, installation of a stopper or other sealing member, or any other suitable process.

Referring now to FIG. **4**A, another system **10** for producing and packaging medical fluids is shown. As described in relation to FIG. **3**, the system **10** is configured to fill individual bags **26** as opposed to filling through a fill receiving set **24**. The example system **10** in FIG. **4**A is configured to generate bags **26** having various types of solutions. The system **10** in FIG. **4**A includes components described in relation to FIG. **2**A to accomplish mixing operations in order to generate the solution. FIG. **4**B depicts another system **10** for producing and packing medical fluids which is configured to fill individual bags **26**. This system **10** includes components described above in relation to FIG. **2**B in order to generate various types of solutions to fill the bags **26** with. Any mixing circuit (see, e.g., FIGS. **204-205**) described herein may be used to generate solution.

In other embodiments and referring now to FIGS. **5**A and **5**B, bulk reservoirs **40**, **42** may not be used. Instead, the bags **26** may enclose an appropriate amount of concentrate (depicted as a stipple pattern in each bag **26**). This concentrate may be prepackaged into the bags **26**. As fluid from the medical water production device **14** flows into the bags **26**, the amount of concentrate may be sufficient to generate the desired final solution concentration. The concentrate may be provided in the form of a liquid in some embodiments. In alternative embodiments, the concentrate may be a powder or lyophilized drug. In still other embodiments, the concentrate may be included in an ampoule or similar structure provided within each bag **26**. Where ampoules are used, the ampoule may be interruptible or frangible so as to allow access to the material contained within the ampoule. The ampoule may be mechanically breakable by the system **10** or shattered by ultrasonic waves produced by the system **10** in some embodiments. Lighter and/or less bulky concentrate forms may be used when possible. For example, a crystalline solid may be used instead of a saturated solution, though both are possible.

Where various systems **10** are described herein including mixing circuits **348** or bulk reservoirs **40**, **42** and other mixing components, the fluid mixing components may be omitted and bags **26** including prepackaged concentrate may alternatively be used. Additionally, bags **26** including prepackaged concentrate may be used in systems **10** described herein including mixing circuits **348** or bulk reservoirs **40**, **42** and other mixing components. Thus, for example, a system **10** may produce saline and bags **26** may include a prepackaged concentrate in order to produce a desired solution (e.g. D5NS where bags **26** include prepackaged crystalline dextrose).

Referring now also to FIG. **6**, in certain embodiments the bag **26** may be a multi-chamber bag **26**. One chamber **50** may be empty and may be adjacent at least one concentrate chamber **54** containing liquid, lyophilized, crystalline, or otherwise powdered, concentrate (depicted as stipple pattern in chamber **54**). The chambers **50**, **54** may be separated from communication with one another via a seal **52** or seals **52**. The seal(s) **52** may be user or machine interruptible. For example, the seal(s) **52** may include a frangible or the seal(s) **52** may be peelable. Depending on the embodiment, the seal(s) **52** between chambers **50**, **54** may be defeated by a user or by the system **10** during production of the bag **26**. In some examples, the seal(s) **52** may be maintained after production of the bag **26** until a point more temporally proximate usage of the bag **26**. This may be done, for example, in cases where the mixed solution has a relatively short shelf life. Where a seal **52** is broken by a component of the system **10**, the seal **54** may be broken before or after filling of the bag **26** with water from the medical water production device **14**. The system **10** may include a shaker, vibrator, mechanical agitator, or other component which aids in mixing the concentrate with any water introduced to the bag **26**. In some embodiment, the entry port to the bag **26** may include a structure which encourages water entering the bag **26** to swirl or turbulently mix any concentrate included in the bag **26**. Where a seal is peelable, it may be generated by altering a process characteristic during seal formation. For example, a lower heat, power, welding time, etc. than that used to form the peripheral seal of the bag **26** may be employed to make the peelable seal. In certain examples, the system **10** may include a set of rollers or similar pressure applicators which may operate on the bag **26** to disrupt any peelable seals.

Where bags **26** are provided with some form of concentrate therein, the bags **26** may be coded so as to be easily identifiable by human, machine, or both. Bags **26**, may for example be color coded (color A=saline, color B=ringer's, color C=sugar solution, and so on). Color coding may not be applied to the entirety of the bag **26**. A seam of the bag **26** may be color coded or the bag **26** may include a stripe, block, or zone of color coding. Locations of the color coding or the shape of a zone of color coding may also differ across bags **26**. The bags **26** may also include a machine readable indicia such as a bar code, data matrix, wirelessly interrogatable tag, etc. In some embodiments, the bags **26** may also be color coded by volume or color coded by various set characteristics. For example, administration set **28** having a burette, injection port, etc. may have different color coding than those without.

In some embodiments, the bags **26** may be differentiated on the basis of a human or machine observable feature other than color. For example, in some embodiments, the bags **26** or a portion thereof may additionally or instead have different geometries such as an elongate shape, square, cylindrical, etc. Any shape having a round or polygonal cross-section may be used. Locations of compartments within the bag **26** may also differ in a visually differentiable way and compartment locations may depend on the concentrate held therein. For example, a first concentrate may be located in a corner compartment or the bag **26**. A seal defining such a compartment may run from a side of the bag **26** and extend to another side of the bag **26** which extends at an angle which is substantially perpendicular thereto. A second concentrate may be stored in a compartment **54** running along a side of the bag **26** defined by a seal **52** extending the length or width of the bag **26** parallel to an edge of the bag **26** (see e.g. FIG. **6**). Any bags **26** of the type described in U.S. application Ser. No. 16/384,082, filed Apr. 15, 2019, entitled Medical Treatment System and Methods Using a Plurality of Fluid Line, which is hereby incorporated by reference herein it its entirety may be used.

Referring now to FIG. **7**, an exemplary bag **26** is depicted. The bag **26** may be filled with any of the fluids described herein by any of the systems **10** described herein. Any of a wide range of medical fluids may be contained within the bag **26**. Though the example bag **26** may be used in any of a variety of scenarios, the bag **26** shown in FIG. **7** includes features which may be well suited to applications where the fluid contained the bag **26** is mixed and packaged on site at or near the intended point of use. For example, the bag **26**

may be filled by a system **10** within a hospital, clinic, dialysis clinic, surgery center, or other medical practice institution where the solution is to be used. Alternatively, the bag **26** may be filled by a system **10** in a military field hospital or at a site of a disaster relief operation. The example bag **26** includes features which may allow an aliquot of fluid to be isolated therein from a volume of fluid filled into the bag **26** for delivery to a patient. This aliquot may be created from or be representative of the fluid which was filled into the bag **26**. Such bags **26** may be used in embodiments where the system **10** fills bags **26** individually. Alternatively, such bags **26** may be included in a fill receiving set **24**.

As the aliquot associated with the bag **26** is isolated from all other fluid filled into the bag **26**, the aliquot may be accessed discretely without also accessing the main volume which may be filled with fluid intended for administration to a patient. This may allow a sample of fluid which is compositionally representative of fluid in the main volume to be extracted from the isolated aliquot for testing. The main volume of fluid filled into the bag **26** may remain undisturbed by the sampling conducted on the aliquot. Thus, the aliquot may allow for sampling of fluid in the bag **26** without the need for the entire bag **26** to be compromised or discarded. As a result, it may be possible to test each bag **26** before the bags **26** are cleared for use. Additionally, this may allow for certain testing which is difficult or not feasible to conduct as the bag **26** is filled to be performed after the bags **26** are filled. Testing which requires an incubation or wait period, for example, may be performed on fluid sampled from the aliquot isolated within the bag **26**. After filling, bags **26** may be held in a quarantine until this testing is completed. Once testing indicates that the fluid in the bags **26** meets predefined acceptability criteria, the bag **26** may be released for use.

As shown in FIG. **7**, the example bag **26** includes two ports **392**. These ports **392** may be sealed into a peripheral seal **1200** which defines the interior volume of the bag **26**. The ports **392** may provide fluid communication into and out of the bag **26** for filling and delivery of fluid in the bag **26**. One may, for example, be a filling access which is sealed after filling. The other may be a delivery port which can be spiked to access the fluid in the bag **26** when it is needed for delivery to a patient. Where the bag **26** is included as part of a fill receiving set **24**, the filling port **392** may be connected to a manifold **20**.

As shown, the bag **26** includes a partial barrier wall **1202**. The partial barrier wall **1202** may substantially section off a portion **1203** the interior volume of the bag **26** from the remainder of the interior volume or main volume **1205** of the bag **26**. The partial barrier wall **1202** may, however, be broken by at least one gap or interrupt region **1204**. The gap region **1204** may provide a fluid pathway between the sectioned off portion **1203** of the bag **26** and the remainder of the interior volume **1205** of the bag **26**. As the bag **26** is filled, both main volume **1205** of the bag **26** and the sectioned off portion **1203** may receive fluid. As the gap region **1204** keeps the sectioned off portion **1203** in fluid communication with the main volume **1205**, the fluid which fills into the sectioned off portion **1203** and the main volume **1205** should be compositionally the same.

Referring now also to FIG. **8**, once the bag **26** has been filled, a seal may be created in any gap regions **1204** breaking up the partial barrier wall **1202**. This may generate a complete barrier wall **1206** which totally isolates the main volume **1205** of the bag **26** from the sectioned off portion **1203**. This may be accomplished by heat sealing (or otherwise sealing) the bag **26** material together at the at least one gap region **1204**. Thus an aliquot of fluid may be segregated from the main volume **1205** of the bag **26**. As this aliquot is generated from the same initial interior volume of the bag **26** as the main volume **1205**, the aliquot may be referred to as an internal aliquot.

The partial barrier wall **1202** may be generated within the bag **26** such that when the bag **26** is filled and at least one interrupt or gap region **1204** is sealed, the internal aliquot will have a desired nominal volume of fluid contained therein. Likewise, the partial barrier wall **1202** may be disposed such that the main volume **1205** within the bag **26** has a nominal capacity volume when the bag **26** is filled and the gap region **1204** is sealed. The internal aliquot may be sized to contain a volume of fluid sufficient for any intended sampling.

As shown in FIG. **8**, the completed barrier wall **1206** may be positioned and shaped so as to encourage fluid contained in the main volume **1205** of the bag **26** to be directed toward the ports **392** when fluid in the bag **26** is delivered. In the example, the sectioned off portion **1203** of the bag **26** is located in a corner of the bag **26** on a side of the bag **26** proximate the ports **392**. The completed barrier wall **1206** includes a sloped segment **1208** which slants towards the ports **392**. Thus, when the bag **26** is hung (e.g. for gravity feed based delivery), fluid may be inhibited from being trapped or pocketed along regions of the complete barrier wall **1206**. This may help to ensure that all of the fluid filled into the main volume **1205** of the bag **26** is able to be delivered without requiring user intervention to reposition the bag **26**. In other embodiments, the completed barrier wall **1206** may include rounded features which aid in directing fluid toward the ports **392**. In alternative embodiments, the interior aliquot may be generated at a side of the bag **26** opposing that which includes the ports **392** or in a corner of the bag **26** distal to those adjacent the ports **392**.

Referring now to FIG. **9**, a flowchart **1240** depicting a number of example actions which may be executed to package fluid within a bag **26** is shown. In block **1242**, a filling nozzle may be introduced into a port **392** of a bag **26**. Fluid may be delivered through the filling nozzle into the interior volume of the bag **26** in block **1244**. The bag **26** may be filled until a desired volume of fluid has been transferred into the interior of the bag **26**. In block **1246**, the nozzle may be removed from the port **392** and the port **392** may be sealed. Where the bag **26** is included as part of a fill receiving set **24**, a nozzle may not be used. Instead, the port **392** of the bag **26** may receive fluid from a manifold **20**. When the desired amount has been filled into the bag **26**, the port **392** may be sealed and the bag **26** may be served from the manifold as described elsewhere herein.

In block **1248**, a seal may be generated within the bag **26**. This seal may create an internal aliquot within the interior volume of the bag **26** that is isolated from the main volume of the bag **26**. In block **1250**, a sample of fluid from the internal aliquot may be collected and tested. Where the bag **26** is included as part of a fill receiving set **24**, a nozzle may not be used. Instead, the port **392** of the bag **26** may be filled through a manifold **20**. When the desired amount has been filled into the bag **26**, the port **392** may be sealed and the bag **26** may be served from the manifold as described elsewhere herein.

Referring now to FIG. **10**, another exemplary bag **26** is depicted. As shown, the bag **26** includes two ports **392**. These ports **392** may be sealed into a peripheral seal **1200** which defines the interior volume of the bag **26**. In the example embodiment, the peripheral seal **1200** includes an

enlarged section **1210** where the ports **392** are coupled into the bag **26**. The enlarged section **1210** may have a width which is greater than the rest of the peripheral seal **1200** and may have one or more features defined therein. These features may be defined by leaving select areas open or unsealed when the enlarged section **1210** of the peripheral seal **1200** is formed.

In the example embodiment, the ports **392** may not extend all the way through the enlarged section **1210**. As shown, the ports **392** extend partially into the enlarged section **1210** and are aligned with channels **1212**. The channels **1212** may be unsealed regions which are defined during the formation of the enlarged portion **1210** of the peripheral seal **1200**. The channels **1212** may extend from the terminal end of the ports **392** to the interior volume of the bag **26**. Thus, the ports **392** in combination with their respective channels **1212** may provide fluid communication into and out of the bag **26** for filling and delivery of fluid in the bag **26**. One pair may, for example, be a filling access which is sealed after filling and receives fluid from a filling nozzle **1421** or manifold **20**. The other may be a delivery flow path which can, for instance, be spiked to access the fluid in the bag **26** when it is needed for delivery to a patient.

As shown, one of the channels **1212** includes a branch **1214**. The branch **1214** may extend to a sampling reservoir **1216** which is included within the enlarged portion **1210** of the peripheral seal **1200**. The sampling reservoir **1216** and branch **1214** may again be defined as open regions during the formation of the enlarged portion **1210** of the peripheral seal. As the bag **26** is filled, the branch **1214** and the sampling reservoir **1216** may be in communication with the interior volume of the bag **26**. Thus, when the bag **26** has been filled, fluid within the sampling reservoir **1216** and the interior volume of the bag **26** may be in communication and should be compositionally the same. Once the bag **26** is full, and referring now to FIG. **11**, the sampling reservoir **1216** may be isolated from the interior volume of the bag **26**. In certain examples, this may be accomplished by heat sealing (or otherwise sealing) the branch **1214** or a portion thereof closed. Thus, as above, an internal aliquot of fluid may be segregated within the bag **26**.

Referring now to FIG. **12**, another exemplary bag **26** is depicted. As shown, the bag **26** includes three ports **392**. These ports **392** may be sealed into a peripheral seal **1200** of the bag **26**. The bag **26** may also include an interior seal **1220**. The interior seal **1220** in conjunction with the peripheral seal **1200** may define to a first interior compartment **1222** and a second interior compartment **1224**. The compartments **1222**, **1224** may have different volume capacities. The interior seal **1220** may extend between two of the ports **392** such that one of the compartments **1222**, **1224** is accessible via a single port **392** and the other of the compartments **1222**, **1224** is accessible via the remaining two ports **392**. The compartment **1222**, **1224** accessible via only one port **392** may be, but need not necessarily be, the smaller of the compartments **1222**, **1224**. In the example embodiment, the second compartment **1224** has a smaller capacity than the first compartment **1222**.

The smaller volume compartment **1224** may be filled through the port **392**. The port **392** leading to the small volume compartment **1224** may then be sealed. The smaller compartment **1224** may thus be filled to contain an isolated sample aliquot which may be drawn from to conduct various testing. The larger compartment **1222** may contain the medical fluid preparation that is intended for delivery to a patient. The larger compartment **1222** may be filled through one of the ports **392** which is then sealed. The other port **392** communicating with the larger compartment **1222** may be used for delivery of fluid. As the sampling aliquot in the small compartment is filled into a compartment which is fluidically isolated from the fluid to be delivered to the patient, the aliquot may be referred to as an external aliquot. Both compartments **1222**, **1224** may be filled at the same time from a filling line which is branched. Thus the fluid in the external aliquot should be compositionally representative of the fluid in the larger compartment **1222**.

The interior seal **1220** may be positioned and shaped so as to inhibit fluid contained in the larger compartment **1222** of the bag **26** to from being pocketed away from the ports **392** when fluid in the larger compartment **1222** is administered via a gravity feed. In the example, the internal seal **1220** is a vertical seal which extends along the length of the bag **26** in a direction substantially parallel to the axes of the ports **392**. In alternative embodiments, the interior seal **1220** may include slanted portions similar to those shown in FIG. **8**. Rounded contours which aid in directing fluid toward the ports **392** may also be used in other embodiments.

In certain examples, and referring now primarily to FIG. **13**, the internal seal **1220** may be constructed with a perforation **1221** therein. The perforation **1221** may extend along the entire length of the internal seal **1220** and allow for the external aliquot filled into the bag **26** to be separated from the bag **26** after filling. In bags **26** where a perforation is present, each compartment **1222**, **1224** of the bag **26** may include corresponding (e.g. matching) unique identifiers which may be machine and/or human readable. Any suitable identifier may be used such as any of those described herein. This may allow any testing done on the external aliquot which was separated from the bag **26** to be associated with the remaining, but now separate portion of the bag **26**. Perforations **1221** which allow isolated aliquots to be separated from a bag **26** may be included in other bag **26** embodiments. For example, the partial barrier wall **1202** described in relation to FIG. **7** and FIG. **8** may include a perforation **1221**. Additionally, the seal generated when the gap regions **1204** in the partial barrier wall **1202** are filled in to generate the complete barrier wall **1206** may include perforations **1221**. This may allow the internal aliquot to be separated from the remaining portion of the bag **26** are isolation.

Referring now to FIG. **14**, a flowchart **1260** detailing a number of example actions which may be executed to package fluid within a bag **26** is shown. In block **1262**, a nozzle may be introduced into a first port **392** of a bag **26** which may communicate with a first compartment in the bag **26**. A second nozzle may also be introduced into a second port **392** of the bag **26** which communicates with another compartment of the bag **26** in block **1262**. Fluid may be delivered into the bag **26** until the bag **26** compartments are filled to a desired amount in block **1264**. In block **1266**, the nozzles may be removed from the first and second ports **392** and the first and second port of the bag **26** may be sealed. This may create a first compartment which may be in communication with a third port through which the contents of the first compartment may be administered. This may also create an external aliquot of fluid in the second compartment (e.g. the smaller compartment) which may be used for testing. In block **1268**, a sample from the external aliquot may be collected and tested. Where the bag **26** is included as part of a fill receiving set **24**, nozzles may not be used. Instead, the ports **392** of the bag **26** may receive fluid through a manifold **20**. When the desired amount has been

filled into the bag **26**, the port **392** may be sealed and the bag **26** may be served from the manifold **20** as described elsewhere herein.

Referring now also to FIG. **15**, an example filling implement **1290** is depicted. As shown, the filling implement **1290** includes a first filling nozzle **1292** and a second filling nozzle **1294**. Such a filling implement **1290** may be utilized to fill a bag **26** such as that shown in FIG. **12**. The filling implement **1290** includes a common line **1296** and a furcation **1298** which branches fluid flowing in the common line **1296** to each of the first and second nozzles **1292**, **1294**. Each of these nozzles **1292**, **1294** may deliver fluid into separate compartments included in a bag **26**. The second nozzle **1294** may be associated with an unpowered valve which halts flow into the associated compartment when that compartment reaches capacity. In the example embodiment a check valve **1299** is depicted. As the compartments of the bag **26** may be of differing sizes, one compartment may completely fill prior to the large compartment. Once the smaller of the compartments has filled, the pressure in that compartment may begin to build (relevant seals in the bag **26** may be constructed sufficiently soundly to withstand this pressure). The check valve **1299** may then actuate and prevent further flow into the smaller compartment after it is filled to capacity.

Referring now to FIG. **16**, in some embodiments the filling nozzle **1230** may include features which may allow an aliquot of fluid to be isolated from the fluid filled into the bag **26**. This aliquot may be created as fluid is filled into the bag **26**. In certain examples, the aliquot may be collected by overfilling the bag **26** and collecting fluid which flows out of the bag **26** after the bag **26** has been filled to its capacity during the filling operation.

As shown, a filling nozzle **1230** may be inserted into a port **392** of a bag **26**. The filling nozzle **1230** may include a first lumen **1232** and a second lumen **1234**. The first lumen **1232** may be in fluid communication with a fluid source and may receive fluid which is pumped or otherwise delivered from the fluid source. Fluid from the fluid source may exit the first lumen **1232** and fill the bag **26**. The second lumen **1234** may extend out of the filling nozzle **1230** and may be in communication with an aliquot collection reservoir. As fluid in excess of the capacity of the bag **26** is ejected out of the first lumen **1234**, this overfilling may cause fluid in the bag **26** to be pushed out through the second lumen **1234**. The fluid pushed out of the bag **26** through the second lumen **1234** should be compositionally the same as the rest of the fluid in the bag **26**. Thus, the fluid passing to the aliquot collection reservoir during the period of overfilling may be representative of the contents of the bag **26** when tested.

In an alternative embodiment, the bag **26** may include two ports **392**. The bag **26** may be overfilled through a first of the ports **392** and the second of the ports **392** may be in communication with an aliquot collection reservoir. After the bag **26** is filled to its capacity, additional fluid may cause fluid within the bag **26** to be force out of the bag **26** through the second port **392** and into the aliquot collection reservoir. The aliquot collection reservoir may be separated from the bag **26** and the second port **392** may be closed with a spikeable access or septum. The filling nozzle may be removed from the first port **392** and the first port **392** may be sealed. As the fluid pushed into the aliquot collection reservoir was displaced from the interior volume of the bag **26**, the fluid should be compositionally the same as the rest of the fluid in the bag **26** and testing performed on a sample from the aliquot should be representative of the bag **26** contents.

Referring now to FIG. **17**, a flowchart **1270** detailing a number of exemplary steps which may be executed to package fluid within a bag **26** is shown. As shown, in block **1272**, a nozzle **1230** may be introduced into a port **392** of the bag **26**. In block **1274**, fluid may be delivered into the bag **26** through a first lumen **1232** of the fill nozzle **1230** until the bag is filled to a desired amount. In block **1276**, an additional volume of fluid may be delivered to the bag **26** through the first lumen **1232** of the nozzle **1230**. In block **1278**, the overflow out of the bag **26** may be collected in an aliquot collection reservoir through a second lumen **1234** in the nozzle **1230**. In block **1280**, the nozzle **1230** may be removed from the port **392** and the port **392** may be sealed closed. In block **1282**, fluid from the overflow aliquot may be tested.

Referring now to FIG. **18**, an example fill receiving set **24** is depicted. As shown, the fill receiving set **24** includes a plurality of bags **26** and administration sets **28**. The manifold interface elements **22** of each administration set **28** are attached to a manifold **20** which is included as part of the fill receiving set **24**. This attachment may be performed in a controlled sterile environment before placement of the bags **26**, administration sets **28** and manifold **20** into an over pack **60**. The over pack **60** may be a sealed bag or blister pack in certain embodiments. The entirety of the bags **26**, administration sets **28** and manifold **20** may all be sterilized via an appropriate method perhaps after packaging within the over pack **60**. Gamma sterilization, ethylene oxide, and/or electron beam sterilization may, for example be used. The over pack **60** may maintain a sterile environment which protects the fill receiving set **24** from contamination during storage. Any fill receiving set **24** described herein may be sterilized as outlined above. Embodiments which fill bags **26** individually may also receive bags **26** and perhaps a dispenser (e.g. bag magazine) within an over pack **60** sterilized as described above. Stopper dispensers described elsewhere herein may be similarly sterilized and provided in an over pack **60**. Any other consumables described herein which replaced during operation of the system **10** may be provided sterilized in an over pack **60**.

In some embodiments, various protective caps or films may be included over some components of the fill receiving set **24**. For example, a film or cap may be included on any couplers on the manifold **20** that are not pre-connected to another component. This may facilitate establishment of aseptic connections if manipulation of the bags **26** and administration sets **28** after being removed from the over pack **60** is needed to install fill receiving set **24** into the system **10**. The cap or film may be removed shortly before connection or installation to the system **10**.

In some embodiments, the manifold interface elements **22** of the administration sets **28** may not be pre-connected to the manifold **20**. The system **10** may make any necessary connections in an automated manner. This may be accomplished as described in U.S. application Ser. No. 16/384,082, filed Apr. 15, 2019, entitled Medical Treatment System and Methods Using a Plurality of Fluid Line, which is hereby incorporated by reference herein it its entirety.

In embodiments where the system **10** makes connections in an automated fashion, each of the manifold interface elements **22** may include a cap which may be removed by the system **10**. In such embodiments, the system **10** may include a drivable sled upon which the manifold interface elements **22** may be installed. A second sled which includes cap retainers or graspers may also be included. The second sled may displace toward the first sled to couple with the caps. The second sled may then be displaced from the first

sled to remove the caps from the administration sets **28**. The second sled may then retract out of a displacement path of the first sled. The first sled may be advanced toward the manifold **20** to seat the manifold interface elements **22** on couplers of the manifold **20**. In some embodiments, the administration sets **28** or another filling conduit may include a piercable septum which maintains a sterile barrier for the interior volume of the associated bag **26** and administration set **28**. In such embodiments, the manifold **20** couplers may include piercing members such as spikes or needles and the action of the first sled may result in the piercing members being driven through and into sealing engagement with the piercable septums to facilitate filling.

The manifold **20** may also include a coupler **62** for establishing fluid communication with the output of a medical water production device **14**. In some embodiments, this coupler **62** may include a cap and may be driven into a piercing member (e.g. spike or needle) communicating with the output from the medical water production device **14** in the manner described above. In other embodiments, the coupler **62** may be a luer fitting. By providing the manifold **20** within the over pack **60** with the manifold interface elements **22** pre-connected to the manifold **20**, only a single connection may be made to place the bags **26** and administration sets **28** in communication with the output stream of the medical water production device **14**. This eliminates a need to make a number of aseptic connections. This may be particularly desirable in embodiments where a fill receiving set **24** includes a large amount of bags **26** and administration set **28**.

Each of the bags **26** may be the same volume bag **26** in certain embodiments. The bags **26** may, however, be filled to a volume that is smaller than capacity if desired. This may allow for uniformity and simplicity in the system **10**. There would not be a need to stock many different fill receiving sets **24** (mini-bag, 250 ml, 500 ml, 1 liter, and so on). In some embodiments, there may be two types of sets **24**. One type of set **24** may include bags **26** which are a largest volume size bag of bags **26** intended to be used for relatively small fluid volumes. These bags may accommodate any fill volume from very small volumes up to some first maximum volume (e.g. 500 ml). Other maximum capacity cutoffs may be used. The other type of set **24** may include large volume size bags which can accommodate any fill volume in a range of high volume preparations up to a second maximum volume higher than the first maximum volume. The volume in a particular bag **26** as the bag **26** is filling may be determined by at least one of a scale, flow meter, and/or a fluid transfer monitoring system such as that described in in U.S. application Ser. No. 16/384,082, filed Apr. 15, 2019, entitled Medical Treatment System and Methods Using a Plurality of Fluid Line, which is hereby incorporated by reference herein it its entirety.

In some embodiments, the system **10** may include a printer or labeling component which may provide an indication of the fill volume of the bag **26** directly on the bag **26** or administration set **28**. Alternatively, where the bag **26** may include a unique identifier, the system **10** may communicate with a database which associates the fill volume with that unique identifier. Through a communications network, the unique identifier may be looked up (e.g. via a barcode or data matrix scanner) to query the database for the bag's **26** fill volume. Where a printer or labeling component is included, the printer or labeler may also document any information which may be required by law or regulation on the bag **26**.

The bag **26** may be filled to a specific amount less than the intended total administration volume in certain instances. One instance where this may be done is when there is an intention to inject a volume of drug into the bag **26**. In such instances, the bag **26** may be filled so as to contain an appropriate amount of diluent to generate a solution at administration concentration. For example, if a patient is prescribed one liter of drug preparation at a certain concentration, the bag **26** may be deliberately under filled by an amount equal to the volume of concentrated drug to be injected in order to generate the correct concentration solution for that patient. The system **10** may communicate with a physician order entry system and the control system **15** may determine the proper fill volume based on the prescription the bag **26** is being generated for.

Fill receiving sets **24** may also exist for certain types of drugs. For example, a fill receiving set **24** constructed with or outfitted for use with light sensitive drugs (e.g. amphotericin B, nitroglycerin, etc.). In such embodiments, the administration sets **28** and bags **26** may be made of a light blocking material or may be fitted with light blocking covers or sleeves. In some instances, material used to form the lines or bags **26** may include a light blocking layer (e.g. of amber or green material).

In certain examples, a plurality of fill receiving sets **24** having different characteristics (e.g. bag size) may be concurrently installed in the system **10**. The system **10** may fill a bag **26** from an appropriately sized fill receiving set **24** depending on the order that the system **10** is fulfilling. In such embodiments, the fill receiving set **24** may include an indicium (e.g. barcode, data-matrix, RFID, etc.) which may be read by the system **10** to allow the system **10** to determine the type of set **24** installed.

Referring now to FIGS. **19**A-**19**B, the bags **26** and administration sets **28** included in a fill receiving set **24** may be integrated with one another. This may be desirable as it may allow for the administration set **28** to come pre-primed in certain embodiments. Additionally, it would remove the need to spike a bag **26**. As a typical bag **26** can be difficult to hold and spike, an integrated set could make bags **26** more user friendly and remove an aseptic connection procedure that is performed during set up. The administration set **28** may be integrated into the bag **26** in a manner similar to that used to incorporate spike ports, injection ports, etc. into the peripheral seal of IV bags.

A bag **26** may, for example, be constructed of two separate sheets **84**A, B of flexible material. The sheets **84**A, B may be joined at their periphery via any suitable type of sealing method including solvent bonding, RF welding, heat sealing, adhesive, ultrasonic welding, etc. The sheets **84**A, B may be made of any suitable material or laminate of materials. Tubing **82** may be similarly constructed. Layers of the laminate may be chosen and ordered to achieve desired objectives. For example, vapor or gas impermeable layer(s) or other barrier layer(s), bonding layer(s), solution compatible layer(s), and reinforcing or durability increasing layer(s) may be included. The materials chosen may be informed by intended sterilization method, weight, optical clarity, durometer, flexibility, heat resistance, lubriciousness, elastic modulus, required materials thicknesses, ease of molding (e.g. molding fittings to end of tubing), strength, propensity to kink, light blocking ability, dielectric/polar properties, etc. Materials which may be used to construct the bags and tubing are provided in Table 1 below:

Polymers	Homopolymers	Hydrocarbon copolymers
Polyesters	Polybutadiene	Polyamides
Styrene	Polyvinylchloride	polyolefins
Polypropylene	Propylene ethylene copolymer	Polyethylene copolymers
LDPE, VLDPE, ULDPE	MDPE	HDPE
Silicone	Cross-linked polyethylene	Synthetic Rubber
Thermoplastic Rubbers	Rubber	Latex
Fluoropolymers	Nylon	Plastics free of phthalate plasticizers or free of DEHP
Ethylene vinyl acetate	Polyether block amide	Thermoplastic Polyurethane
Plastics containing polar molecules	RF weldable polyolefin	

Where the sheets **84**A, B are of a multilayer construction they may be formed in extrusion lamination or co-extrusion processes for example. The tubing **82** of the administration set **28** may be made as a multi-layer construction (e.g. extrusion) of different materials. Where dissimilar materials are used an adhesive layer may be present in certain embodiments. The outer layer of the tubing **82** may have a lower melting point range than at least the inner layer(s) of the tubing **82**. The melting point range of the outer layer of the tubing **82** may overlap with that of the bag **26** material. During construction, the tubing **82** may be compressed between the sheets **84**A, B and heated in a welding process. The outer layer of the tubing **82** may be joined to the bag **26** and the inner layer may maintain a patent lumen which allows flow in and out of the bag **26** as shown in FIG. **19**B. In alternative embodiments, the bag **26** may be blow molded. In such embodiments, the tubing **82** may be attached at the periphery in a similar welding process.

FIG. **20** depicts another example bag **26**. The exemplary bag **26** in FIG. **20** includes an administration set **28**. The bag **26** also includes an example filling port **90**. The example filling port **90** may interface with either a manifold **20** or may directly interface with an output of a medical water production device **14**. The filling port **90** may be integrated into the bag **26** as described above for the tubing **82** and may include a self-sealing septum, plug, cap, or similar sealing arrangement. This sealing member may be installed after the filling process has completed. Alternatively, a sealing member may not be used and a welded seal may be formed instead. The filling port **90** may also be used as an injection port which may allow for addition of medication into the bag **26** as desired. In other embodiments, the fill port **90** may be located in a side of the bag **26** where the administration set **28** is not attached. The fill port **90** may also be included in a face of one of the panels which are joined together to form the bag **26** as shown in FIG. **21**.

FIG. **22**A depicts an alternative bag **26** design in which the administration set **28** is integrated into the bag **26** as discussed elsewhere herein, but is accompanied by a separate filling line **140**. The filling line **140** may be integrated into the bag **26** similarly to the administration set **28**. The filling line **140** may include a coupler **142** which interfaces with the system **10** to receive a fluid stream during filling. The coupler **142** may be located on a portion of the filling line **140** which is sacrificial and removed after filling. In some embodiments, the coupler **142** may be molded into and form part of this portion of the line. The coupler **142** may be a luer fitting in some examples. In other embodiments, a piercable septum as described above may be included.

As shown in FIGS. **22**B-D, after filling the bag **26** through the filling line **140**, the system **10** may generate a seal **146** (indicated by shading in FIG. **22**D) in a segment of the filling line **140**. This may be produced via an RF weld or similar process or via a tube sealer assembly **906** such as that shown and described in relation to FIG. **248** may be used. The seal **146** may be formed via a RF welding dies/bars **144** of the system **10**. In some embodiments a roller or squeegee assembly **145** may be used prior to introduction of the welding dies **144**. The roller or squeegee assembly **145** may press against the filling line **140** and a pair or rollers or squeegees of the assembly **145** may be displaced in opposing directions to push liquid out of the weld area **145** as shown in FIG. **22**C. The welding dies **144** may then be introduced to form the seal in the filling line **140**. The roller or squeegee assembly **145** may or may not remain present as the seal is generated. Once the seal **146** has been formed, a cutting element **148** (see, FIG. **22**E) may separate the sacrificial end of the filling line **140** from the rest of the rest of the filling line **140**. This may result in a sealed portion of filling line **140** extending from the bag **26** as shown in FIG. **22**F. Preferably, the sealed portion of the filling line **140** may be kept to a minimal length in order to limit the volume of fluid which may become isolated from the administration set **28** as the bag empties. In certain examples, the seal **146** may be extended to the peripheral edge of the bag **26**.

Referring now to FIG. **23**, another bag **26** design is depicted. As shown, the bag **26** includes an administration set **28** which is integrated to the bag **26** as described elsewhere herein. The administration set **28** includes a drip chamber **190**, a roller clamp **192** (though another type of clamp or no clamp may be included), and a Y-site **194** (or other type of furcation). The bag **26** may be filled through a fill port **196** attached to the Y-site **194**. Once the bag **26** has been filled, the portion of the branch from the Y-site **194** leading to the fill port **196** may be sealed (e.g. by high frequency weld) and the fill port **196** may be cut off the administration set **28** as described elsewhere herein. During administration, the remaining branch of the Y-site **194** may include an administration port **198** which includes a lumen that remains patent after sealing and removal of the other branch off the Y-site **194**. This administration port **198** may be connected to a cannula line or the like to administer the contents of the bag **26**. In such embodiments, the cannula line may include a check valve to prevent backflow. The ports **196**, **198** may include luer fittings in some embodiments. This type of bag **26** and administration set **28** may come pre-primed. Before use, a user may hold the bag **26** and set **28** such that the administration set **28** is vertically above bag **26**. The drip chamber **190** may be squeezed as needed to displace fluid in the drip chamber **190** into the bag **26**. Air within the bag **26** may then be sucked into the drip chamber **190** as the drip chamber **190** restores to its normal shape. This may create the air space in the drip chamber **190** used to operate the drip chamber **190** and visualize drop formation during flow rate setting.

Referring now to FIG. **24**, another example bag **26** and administration set **28** are shown. As shown, this bag **26** and administration set **28** do not include the Y-site **194** (see, e.g., FIG. **23**). Instead, the administration set **28** includes the administration port **198**. The drip chamber **190** is attached to a frangible or breakable barrier **200** which may be broken by a user prior to administration such that the user may prime the administration set **28**. The bag **26** may include a fill access **202** on another portion of the bag **26** which interfaces with the output of the medical water production device **14** or a manifold **20**. Once filled, this access may be welded closed

and a portion of it may be cut from the bag **26**. This process may be similar to that shown for the bag **26** shown in FIGS. **22**A-**22**F. Alternatively, a fill access **202** may be provided in a form of a Y-site **194** (see, e.g., FIG. **23**) which is disposed upstream of the drip chamber **190**. In some embodiments, an injection port may also be included in the bag **26**. Such an injection port may be included in a side panel of the bag **26** or may attach at an edge of the bag **26** (e.g. adjacent the attachment point of the administration set **28**).

Referring now to FIGS. **25**A-C, an exemplary manifold **20** is shown. A manifold **20** included in the fill receiving set **24** may be a single use component. Alternatively, the manifold **20** may be returned to a manufacturer or brought to another location after use and cleaned to allow it to be used in another fill receiving set **24**. In embodiments where the manifold **20** is a single use component, it may be designed to be simple to manufacture and not unnecessarily expensive. For example, the manifold **20** may be constructed of an injection molded block **68** of material including a number of flow paths **74**. These flow paths **74** may be open on one side. As best shown in FIG. **25**C, a plate or plates **70**, **72** may then be attached to the block **68** to cover any open portions of the flow paths **74**. These plates may be attached in any suitable manner including via heat, solvent bonding, welding, fasteners (and perhaps gaskets), adhesives, etc. In certain embodiments, the plates **70**, **72** may be laser welded onto the block **68** and the block **68** may be made of a material selected at least in part for its ability to absorb a laser welding wavelength (e.g. may be black). The plates **70**, **72** in this embodiment may be clear to allow the laser to pass through to the block **68**. The laser weld may seal around the peripheries of any flow paths **74** included in the manifold **20**. Though described as plates **70**, **72** use of flexible film covers in place of at least one of the plates **70**, **72** is also conceived in some examples.

Referring primarily to FIGS. **25**A and **25**B which depict opposing faces of a block **68** of an example manifold **20**, the block **68** may include a number of pass-throughs **76**A-C in communication with the fluid paths **74**. The block **68** may also include a number of fittings or couplers **78**, **80**. The couplers **78**, **80** may be luer fittings in some example embodiments. If necessary, plates **70**, **72** may include orifices through which the couplers **78**, **80** may extend (see, e.g. FIG. **25**C). In other embodiments, the plates **70**, **72** may include the couplers **78**, **80**. Coupler **78** may be used to form a connection to the output of the medical water production device **14**. The coupler **78** may surround a pass through **76**A which leads to the opposing side of the block **68**. The pass-through **76**A associated with the coupler **78** may be in fluid communication with a number of flow path **74** segments on the opposing side of the block **68**. These flow path **74** segments may each extend to their own pass-through **76**B. In the example, the flow paths **74** extend radially from pass-through **76**A. Any desired routing scheme may be used in alternative embodiments. The pass-throughs **76**B each extend through the block **68** to a flow path **74** segment on the side of the block including coupler **78**. These flow path segments **74** in turn extend to another pass through **76**C which extends through the block **68**. Each pass-through **76**C extends to a coupler **80** on the opposing side of the block **68**. Each of the couplers **80** may couple with a manifold interface element **22** of an administration set **28** included in the fill receiving set **24**. Alternatively, any manifold interface elements **22** described herein may be included on another filling access such as fill access **202** of FIG. **24** or filling line **140** of FIG. **22**A-F.

A fill receiving set **24** including another example of a manifold **20** is depicted in FIG. **26**. The manifold **20** may include a block **310**. The block **310** may include a flow channel **312** therethrough. The block **310** may also include a connector interface **314** for coupling an inlet **324** of the manifold **20** with a dispenser for medical water or a medical fluid mixture (e.g. the output of medical water production device **14** or mixing volume **34**). The flow channel **312** may include a number of branches **316** which extend from the fluid channel **312** wall **318** to ports **326** on a face of the block **310**. A displaceable seal may be included within the fluid channel **312**. In certain examples a displaceable rod **320** may be provided within the fluid channel **312**. The displaceable rod **320** may include a sealing section **322** which may be made of or clad with a complaint material (rubber, silicon, various elastomers, etc.). Alternatively, the sealing section **322** may include one or more o-rings or raised complaint sections. The sealing section **322** may press against the wall **318** of the fluid channel and form a seal between the wall **318** and the displaceable rod **320** such that fluid on one side of the sealing section **322** may not pass to the other side of the sealing section **322**. The displaceable rod **320** may be a plunger **330** (see, e.g. FIG. **27**) in some embodiments. The displaceable rod **320** may also be a threaded rod or lead screw **332** (see, e.g., FIG. **29**) in various examples. The actuator used to govern displacement of the displaceable rod **320** may be selected based on the type of displaceable rod **320** used.

The displaceable rod **320** may be actuated along the extent of the flow channel **312** to place various branches **316** into communication with the inlet **324**. This may allow for bags **26** to be filled serially (one, two, or three, and so on at a time). In the example shown in FIG. **26**, a bag **26** is in fluid communication with the inlet **324** such that fluid entering the manifold **20** may be directed to that bag **26**. The sealing section **322** of the displaceable rod **320** prevents flow of incoming fluid to any other bags **26** coupled to ports **326** of the manifold **20**. After the first bag **26** has been filled, the bag **26** may be sealed from the fluid channel **312** and removed from the manifold **20**. This may be accomplished with welding dies **144** and perhaps a roller or squeegee assembly **145** similarly to as described in relation to FIGS. **22**A-F. The displaceable rod **320** may then be displaced along the fluid channel **312** to place a next bag **26** or bags **26** into fluid communication with the inlet **324** for filling and the process may be repeated. Though only three bags are shown, any number of bags **26** may be included on a manifold **20**.

Additionally, in certain embodiments, a manifold **20** may include multiple flow channels **312** each associated with a displaceable rod **320** (e.g. all extending parallel or generally parallel to one another). This may allow filling of bags **26** in communication with different flow channels **312** in a parallel manner or independently from one another. Where bags **26** associated with different flow channels **312** are filled in parallel, the displaceable rods **320** of the various flow channels **312** may be coupled so as to move in a coordinated manner with one another (perhaps in a 1:1 ratio for example). A system **10** may also fill bags **26** of multiple manifolds **20** where multiple manifolds **20** may be installed in the system **10** at the same time.

With reference to FIG. **27** and FIG. **28**, an example manifold **20** is shown. In the example manifold **20** the displaceable rod **320** is depicted as a plunger **330**. The plunger **330** includes a plunger stem **334** and a plunger head **336** which acts as a sealing section **336**. An example including a lead screw **332** as the displaceable rod **320** is shown in FIG. **29**. The lead screw **332** may also include a

sealing head section **338** at a terminal end thereof which is disposed within the manifold **20**. Though not shown, the bags **26** associated with the port **326** of the manifold **20** may include various accesses. In addition to the line extending from each bag **26** to the manifold **20**, each bag **26** may also include one or more of an administration set **28**, spike ports, injection ports, or any other accesses shown herein. Though it may be the case in some examples, not all bags **26** attached to the manifold **20** need be identical. Some bags **26** may include different accesses or have different maximum fill volumes for example. Where a variety of different manifolds **20** may be used with a system **10**, the manifolds **20** may include an identifier which includes information as to the type of manifold **20** being installed or information regarding the bags **26** included on the manifold **20**. This identifier may be machine readable such as a barcode, data matrix, RFID, or any other suitable identifier. Information collected from this identifier may be used by the control system **15** in order to control filling of the bags **26** included on the manifold **20**.

Referring now to the progression of FIGS. **30-33**, an exemplary filling sequence is depicted. Though the manifold **20** shown includes a plunger **330**, other displaceable rods **320** (e.g. lead screws, plunger with rack and pinion arrangement) may be similarly displaced through such a filling sequence. The plunger **330** may be provided with its plunger head **336** disposed within the interior of the flow channel **312** of the manifold **20**. The plunger **330** may be initialized in a position against or proximal to the inlet **324** of the manifold **20** (see, e.g. FIG. **28**). The manifold **20** may be coupled to a dispenser **340** to place the flow channel **312** in fluid communication with a medical fluid supply. The coupling may be made aseptically and via a threaded fitting (such as a luer lock), barbed fitting, quick connect, magnetic coupling, or any other suitable method. In some embodiments, steam may be ejected to cleanse the connector interface **314** before coupling occurs.

An actuator (not shown) may withdraw the plunger **330** a distance out of the fluid channel **312**. By displacing the plunger **330** away from the inlet **324**, a port **326** or selected plurality of ports **326** may be placed into communication with the inlet **324**. In the example shown in FIG. **30** only a single port **326** is placed into communication with the inlet **324**. Fluid may then be transferred through the flow channel **312** into the bag(s) **26** in communication with the port or ports **326**. This is depicted representationally via stippling in FIG. **30**. Fluid transfer may be halted once the bag **26** or bags **26** have been filled to the desired amount as shown in FIG. **31**.

As shown, each bag **26** may be connected to a port **326** via a flow path. The ports **326** in this example include projecting fittings (e.g. barbed fittings) onto which tubing providing the flow path is coupled. The flow path may include a sealable region which may, for example, be welded to close the flow path to fluid flow. Thus a seal **342** may be generated at the sealable regions to isolate the bag **26** from the rest of the manifold **20**. The seal **342** may be created as described elsewhere herein (see, e.g. FIGS. **22**A-F). The displacement of the plunger **330** may be tracked by a sensing arrangement to ensure the correct port **326** or ports **326** are in communication with the inlet **324** at a given time. Sensing arrangements may include or include combinations of linear potentiometers, encoders, hall effect sensor arrays monitoring the location of a magnet on the plunger **330**, etc. The fill level of each bag **26** may be monitored via a scale upon which the bags **26** rest.

Filled bags **26** may be removed from the manifold **20** after a seal **342** has been created. As shown in FIG. **32**, a bag **26** has been removed from the manifold **20**. A portion of the seal **342** may serve to close the port **326** from which the bag **26** was removed. As shown in FIG. **32**, the plunger **330** may be withdrawn to a location more distal to the inlet **324** to place an additional bag **26** or bags **26** in communication with the inlet **324**. Fluid may be transferred to fill the bag **26** or bags **26** until filled to a desired amount and a seal **342** may be formed as shown in FIG. **33**. This may repeat until each bag **26** on the manifold **20** has been filled and removed from the manifold **20**.

Referring now to FIG. **34**, a fill receiving set **24** including another manifold **20** is shown. The manifold **20** is similar to that depicted and described in relation to FIGS. **28-33**, however, the bags **26** are coupled to the manifold **20** in an alternative manner. As shown, the ports **326** include no fitting or projection extending away from the manifold **20** to which the flow path to each bag **26** couples. Instead, the fluid lines **344** providing the flow path to the bags **26** are inserted into the orifices in the block **310** forming the ports **326**. The fluid lines **344** may be retained in the ports **326** via solvent bonding, adhesive, threaded coupling, or via any other suitable manner.

In other embodiments, the flow path between the manifold **20** and each bag **26** may include a disconnect fitting **346** as shown in FIG. **35**. The disconnect fitting **346** may allow for a bag **26** to be removed from the fill receiving set **24** without the need for a separate sealing operation. In some embodiments, self-sealing aseptic disconnect fittings may be used. In such embodiments, the fittings may be selected so as to allow for the manifold **20** to be sterilized after all bags **26** thereon have been filled. This may allow the manifold **20** to be reused.

Referring now to FIG. **36-38**, aspects of another example fill receiving set **24** are shown. As shown in FIG. **36**, the fill receiving set **24** may include a manifold **20** which is pre-connected to a number of administration sets **28** which have been integrated into individual bags **26**. As with other embodiments described herein, other filling conduits may be coupled to the manifold **20** in place of the illustrative administration sets **28**. The manifold **20** in the example embodiment may be a cassette **150** which is installed into the system **10**. The cassette **150** may include a fluid introduction port **152** which may connect to the fluid output stream from the medical water production device **14**. The cassette **150** may also include a number of couplers **154** (e.g. luer fittings) which may couple to manifold interface elements **22** on each of the sets **28** (or fill lines **140**, accesses **202**, or other filling conduits).

As best shown in the cassette **150** cross-section depicted in FIG. **38**, the cassette **150** may include a rigid body **156** which may be injection molded in certain examples. The rigid body **156** may include a number of valve stations **158**A-I which may be overlaid by a flexible membrane **160**. In alternative embodiments, multiple flexible membranes may be included. For example, each valve station **158**A-I may be covered by a dedicated flexible membrane. The flexible membrane **160** shown may be actuated (typically pneumatically, though mechanically or hydraulically are also feasible) against and away from the valve seats **162** of each valve station **158**A-I in order to open and close the valves **158**A-I. In the example illustration, all of the valves stations **158** A-I are shown in a closed configuration. The cassette **150** also includes a fluid bus **164** on the opposing side of the cassette **150** mid body **166**. The fluid bus **164** is in communication with the fluid introduction port **152** through a pass-through **172** in the sidewall of the cassette **150**. A second flexible membrane **168** is included on this

side of the cassette **150** to seal the fluid bus **166**. This second flexible membrane **168** may be replaced by a plate such as the laser welded plates described elsewhere herein. The fluid bus **164** may be placed into communication with desired valve stations **158**A-I by displacing the first flexible membrane **160** away from the valve seat **162** of the desired valve station(s) **158** A-I. As shown, each valve station includes a pass-through **174** which leads from the valve station **158**A-I to the fluid bus **164**. This may establish a flow path from the fluid bus **164** to the valve station **158** A-I. The valve station **158** A-I may also include an opening to the coupler **154** of the cassette **150** allowing for fluid to flow from the fluid bus **164** through the valve station **158** A-I and out of the cassette **150** to a bag **26** and administration set **28** attached to the associated coupler **154**. This may allow for bags **26** to be filled one by one (or two by two and so on). In some embodiments, each valve station **158** A-I may be associated with more than one coupler **154**. This may be desirable where bags **26** are filled in multiples at a time.

FIGS. **39**A-C show a progression of valve actuations which may be used to fill bags **26** attached to the cassette **150**. The bags **26** may be filled in any order, but are shown here as being filled in sequence by opening valve stations **158** A-I in a left to right manner. As shown, the leftmost valve station **158**A may be opened to fill the associated bag **26**. Once full, the bag **26** may be removed from the cassette **150** as described elsewhere herein. The valve station **158**A may then be closed. The adjacent valve station **158**B may then be opened to fill its attached bag **26**. That bag **26** and the attached administration set **28** (or other filling access) may be removed (e.g. sealed and cut, disengaged from a cooperating quick connect, etc.) from the cassette **150**. Valve station **158**B may then be closed. Then the next valve station **158**C may be opened, and its associated bag **26** may be filled and removed. The process may continue until all bags **26** have been filled. The number of bags **26** being filled and thus the number of valve stations **158**A-I open at a given time may be determined by the flow rate output of the medical water production device **14**. It may be desirable that the system **10** output a certain number of bags per unit time. If the system **10** were to fill, for example, fifty bags **26** at a time with a low flow rate output there would be a certain downtime before bags **26** become available. By filling bags **26** one by one (or some appropriate number of multiples at a time), the system **10** may provide a steady output of bags **26** at the same flow rate output.

As shown in FIG. **40**, the cassette **150** may interface with an actuation block **180** included in the system **10**. The actuation block **180** may be made of metal (or another material which is robust, dimensionally stable, heat stable, and/or non-porous) and be subjected to a hot steam or venting stream from the medical water production device **14** before the cassette **150** is placed against the actuation block **180**. The flexible membrane **160** on the cassette **150** may be covered by an overlay which keeps the surface of the flexible membrane **160** sterile prior to application against the actuation block **180**. This overlay may be removed by the system **10** or an operator. In some embodiments, the cassette **150** may be pressed against the actuation block **180** by closure and latching of a door of the system **10**. In other embodiments, a piston or plate may be pressed against the side of the cassette **150** including the fluid bus **164** to force the cassette **150** against the actuation block **180** and ensure good seals are made by the flexible membrane **160** around the valve stations **158** A-I. This may be done via inflation of a bladder, rotation of a leadscrew or cam, actuation of a scissor jack, linear actuator, or any other actuator which can apply a sufficient force.

As shown, the actuation block **180** includes a number of pressure pathways. These pressure pathways may individually be placed into selective communication with either a positive pressure source **182** or negative pressure source **184** (pneumatic for example) to open and close the valve stations **158**A-I of the cassette **150**. Each control chamber **186** may be selectively placed into fluid communication with the positive pressure source **182** or negative pressure source **184** by operation of valves **188** associated with each control chamber **186**. In the example embodiment, each control chamber **186** is associated with a valve controlling application of positive pressure and a valve controlling application of negative pressure. In alternative embodiments a single valve may be utilized to toggle between positive of negative pressure application. In such embodiments, the valve may be designed to apply positive pressure in a fail state. The positive and negative pressure sources **182**, **184** may be reservoirs which are maintained to a particular pressure set point by a pump (not shown). The pressure sources **182**, **184** may be monitored by one or more pressure sensors **191** which may inform operation of the pumps maintaining the pressure sources **191** at the pressure set point. In some embodiments, each control chamber **188** may also be in fluid communication with a pressure sensor **192**. This pressure sensor **192** may be monitored as a check that pressure is being applied to a valve chamber **158** A-I of the cassette **150** as expected. In some embodiments, the medical water production device **14** may output product at a pressure above ambient. In such embodiments, negative pressure may not be used. Instead, the pressure of the product water may be used to displace the flexible member **160** to open the valve stations **158**A-I. The positive pressure used to close the valve stations **158**A-I may be chosen so as to be sufficiently higher than the medical water production device **14** output pressure so as to maintain robust closure of the valve stations **158**A-I.

Once a bag **26** has been filled it may be removed from the cassette **150** (or any other manifold **20**) in a variety of ways. For example, a welded seal may be made on the tubing of the administration set **28** (or a filling port **140** or access **202**). The bag **26** and a portion of the administration set **28** may then be cut from the manifold **20**. This may be similar to as described above in relation to FIG. **22**A-F. Alternatively, the tubing of the administration set **28** may be pinched or otherwise occluded and the administration set **28** decoupled from the cassette **150**. The administration set **28** may then be plugged by a cap or similar element. In some examples, each administration set **28** may include a slide clamp. When installed in the system **10**, the slide clamp may interface with an actuator which is commanded to displace once a bag **26** attached to the administration set **28** has been filled to the appropriate amount. Displacement of the actuator may drive a narrow section of the slide clamp toward the tubing such that the narrow section of the slide clamp occludes the tubing of the administration set **28**.

Where the system **10** is configured to mix various fluids, and referring now to FIGS. **41**A-**42**, a cassette **150** may include a number of valve type pumping stations **270**A-C. Via coordinated actuation of valve type pumping stations **270**A-C, small volumes of fluid can be pumped through the cassette **150**. Referring to the progression of FIGS. **41**A-**41**F, three valve type pumping stations **270**A-C of the cassette **150** may be actuated to pump fluid from a concentrate supply inlet **272** included in the cassette **150** in small

volumes. Though the three valve type pumping stations **270**A-C are shown as adjacent to one another, this is done to provide a streamlined example. Other configurations with additional and/or non-adjacent valve type pumping stations **270**A-C may be constructed.

As shown in FIG. **41**B, a first and second valve station **270**A and **270**B may be opened to perform a fill operation of a valve type pumping station. These valve stations **270**A-B may be opened in sequence or at substantially the same time. This may cause fluid flow **278** into these valve stations **270**A-B from the concentrate supply inlet **272**. Once the valve fill is complete, the filled valve station **270**B may be isolated by closing the first valve station **270**A as shown in FIG. **41**C. Thus the second valve station **270***b* may serve as an intermediary holding volume during valve based fluid pumping.

The third valve station **270**C may then be opened to establish fluid communication between the second and third valve station **270**B, **270**C as shown in FIG. **41**D. A valve pump stroke may then be executed by closing the second valve station **270**B as shown in FIG. **41**E. This will transfer a valve pump stroke volume to the third valve station **270**C from the intermediary holding volume. The third valve station **270**C may then be closed, as shown in FIG. **41**F, to pump the valve pump stroke volume toward a valve station **158**A-N associated with a bag **26** attached to the cassette **150**. Alternatively, the third valve station **270**C may be omitted and fluid may be transferred to the desired valve station **158**A-N as the second valve station is closed. This may be repeated as is desired until a target volume of concentrate has been transferred. Greater volumes per valve pumping sequence may be achieved by utilizing a plurality of valve stations as an intermediary holding volume. Further description of such an arrangement is provided in U.S. application Ser. No. 16/384,082, filed Apr. 15, 2019, entitled Medical Treatment System and Methods Using a Plurality of Fluid Line, which is hereby incorporated by reference herein it its entirety.

Once a desired volume of concentrate has been transferred via valve based pumping strokes, and referring now primarily to FIG. **42**, a volume of water may be transferred to a bag **26** to dilute the concentrate to a final concentration. The final concentration may be a concentration which is ready be administered to a patient. The final concentration may also be defined so as to allow for addition of a volume of another medication to make a final medicament preparation which is then administered to the patient. In the example embodiment, a water inflow valve station **274** is included at an extreme end of the cassette **150**. The water inflow valve station **274** may communicate with a water inlet **276** and when open may establish a flow path from the water inlet **276** through the fluid bus **164** to a desired valve station **158**A-N and the associated bag **26**. By positioning the water inflow valve station **274** at the end of the cassette **150**, the water flow through the bus **164** may also serve to flush any concentrate remaining in the bus **164** to the desired bag **26**. In some embodiments, a number of valve pumping strokes using water may be performed by any valve stations (e.g. intermediate holding volume stations) which are not dedicated to a particular concentrate to flush these station.

The volume of concentrate to be flushed from the valve station(s) and/or fluid bus **164** may be accounted for in any volume targets when pumping concentrate into the bag **26** via valve pump strokes. The full volume of concentrate defined for a particular bag **26**, may thus not be transferred into that bag **26** until after the flush has concluded.

FIG. **43** depicts another alternative fill receiving set **24**. As shown, there is a main line **204** which may interface with the output of the medical water production device **14**. Bags **26** may branch off the main line **204** in series via a number of lines **206**. The lines **206** may be attached to the main line **204** at T-junctions in some embodiments. Alternatively, the main line **204** may include a number of coupler fittings to which a cooperating element of a line **206** may couple to. The fill receiving set **24** may be arranged so as to act as the manifold **20**. The lines **206** to the bags **26** may be kept closed by an occluder arrangement acting on the lines. Alternatively, the main line **204** may be occluded upstream of each branch point to a line **206** leading to one of the bags **26**. In certain examples the lines **206** may be closed off via a pinch clamp **302** which may be mechanically actuated at the command of the control system **15**. Bags **26** may be filled one by one and cut from the main line **204** after sealing as described elsewhere herein (see, e.g., FIGS. **22**A-F). Once a bag **26** has been filled and severed from the fill receiving set **24**, the pinch clamp **302** on the another bag **26** (e.g. the adjacent bag) may be opened to allow for filling of that bag **26**. This may repeat until all bags **26** in a fill receiving set **24** have been filled and severed from the main line **204**. In some embodiments, more than one bag **26** may be filled at a time. The lines **206** to the bags **26** may be constructed in the same manner as any of the lines or accesses described above and may include any of the features described elsewhere herein. For example, the bags **26** may include an additional administration line (not shown) similar to FIGS. **22**A-F and FIG. **24** or Y-site similar to FIG. **23**. Drip chambers **190** may also be included. In the example shown in FIG. **43**, the lines **206** are included as filling lines and the bags **26** include additional attached accesses to their interior volumes such as an administration set **28** and injection port **203**.

In some embodiments and referring now primarily to FIG. **44**, pinch clamps **302** may not be used. Instead, each line **206** extending from the main line **204** may have a slide clamp **300** which, when installed in the system **10**, is in an occluding position on the line **206** or upstream the point at which each line **206** branches from the main line **204**. The slide clamps **300** may be displaced to a flow permitting position on the line to allow for filling of each bag **26**. In some embodiments, the slide clamps **300** may be held stationary in a block and the lines **206** may instead be displaced to bring the lines **206** into a flow permitting segment of the slide clamps **300**. After filling, the lines **206** may then be occluded by displacing either the line **206** or slide clamp **300** to bring the line **206** into a flow prohibiting portion of the slide clamp **300** to occlude the line **206**. The same process may be used where the slide clamps **300** are in place on the main line **204**. Once a bag **26** has been filled to the desired amount, the lines **206** may be decoupled from the main line **204** and capped or sealed.

Referring now to FIG. **45**, in certain embodiments, a fill receiving set **24** may be constructed from two layers of material. For example, the fill receiving set **24** may be constructed from a bonded sheet **220** or sheets of material. Where multiple sheets **220** are used, they may be laid atop one another. Where a single sheet **220** is used, the sheet **220** may be a continuous sheet of material folded upon itself to create a multi-layer starting material. As shown in FIG. **46**, access elements **226**, **228** may be placed between the sheets **220** or between layers of the folded over sheet **220** at regular intervals. For example, access elements **226** may be an injection port and access element **228** may be an administration set **28**. In the example embodiment, there are only four sets (pairs in this example) of access element shown,

however, the number of access element **226**, **228** sets may be selected to match the number of bags **26** in the fill receiving set **24**. In some embodiments each set of access elements **226**, **228** may include more than two access elements. In other embodiments only a single access element may be included for each bag **26**.

Referring now to FIG. **47**, a seal **230** may be formed to attach the sheets **220** or portions of the folded over sheet **220** to one another and form the fill receiving set **24**. This may be done via a welding process such as an RF welding process. The materials selected for each sheet may include RF weldable materials and may be polar plastics such as PVC. For example, layers of the sheets **220** or folded over sheet **220** which are adjacent one another prior to welding may be made of such material. During construction of the fill receiving set **24**, a portion of the sheets **220** or sheet **220** may be welded and the sheet material may be indexed to a next portion of the sheet **220**. This portion may be welded and indexed and so on. The number of bags **26** formed in each welding operation may be less than the total number for bags **26** in a fill receiving set **24**. In some embodiments, 1-4 or more bags **26** may be formed at a time. It may be preferable that the number of bags **26** in the fill receiving set **24** is an even multiple of the number of bags **26** formed per welding operation. As shown, the seal **230** may be formed so as to create a flow path **232** in a bus portion **234** of the fill receiving set **24** as well. The interior volume of each bag **26** may be in fluid communication with the bus portion **234** via an offshoot **238** from the flow path **232** to each bag **26**. In the example, offshoots **238** all extend off the bus portions **234** in the same direction. In some embodiments, offshoots **238** may extend from opposing sides of the bus portion **234** such that bags **26** are disposed on each side of the bus portion **234**.

When formed, the bags **26**, bus portion **234**, and offshoots **238** may all be flat with substantially little to no interior volume. During filling, the sheet material may displace so as to allow the bags **26** to fill and to provide lumens at the bus portion **234** and offshoots **238**. As a result, a hold up volume of air should not be present in the bus portion **234** and offshoots **238** and thus is not transferred into the bags **26** during filling. In some embodiments, a vacuum may be pulled on the flow path to ensure a minimal amount of air is present in within the features formed by the seal **230**.

The welding and indexing process may repeat until the whole sheet **220** has been welded to form the fill receiving set **24**. When the sheet or sheets **220** is/are indexed, the welding die may extend over at least a portion of an overlap region in the previously created weld. This may assure that the seal **230** is formed hermetically over entire length of the fill receiving set **24**. In some embodiments, the access element **226**, **228** pairs may be introduced between the sheet **220** or sheets **220** each time an indexing occurs. As shown in FIG. **47**, bags **26** may be formed close to one another so as to minimize waste of sheet **220** material.

After being indexed from a welding station, the sheet **220** or sheets **220** may be cut as shown in FIG. **48** at a cutting station. A section of the sheet **220** or sheets **220** may be cut at the same time another section is welded. The cutting station may include a cutting die which is advanced into the folded sheet **220** or sheets **220** to cut out the bags **26**. The excess material may be separated from the fill receiving set **24**. A port **236** may be included in a terminal end of the fill receiving set **24**. An offshoot **240** from the flow path **232** may extend through the port **236** to the environment. The port **236** may be located adjacent an inlet opening **249** to the flow path **232** in the fluid bus **234**. In certain embodiments, a fitting may be coupled to the opening **249** to facilitate connection to a dispensing member.

Referring now to FIG. **49**, when installed in the system **10** a dispensing member **250** may be received in opening **249** or a fitting affixed thereto. This may be done by user manipulation of the bus portion **234** of the fill receiving set **24**, though this coupling may also be made in automated fashion. Where manual user manipulation is utilized, the interaction between the user and the fill receiving set **24** may occur through a glovebox arrangement. Additionally, an occluder **252** may close the flow path **232** upstream of the first offshoot **238** to a bag **26**. The dispensing member **250** may initially output a steam stream into the flow path **232**. This may cleanse the flow path. The steam may be provided by venting a stream (e.g. purified, but yet uncondensed water vapor, perhaps a compendial steam such as pure steam) from the medical water production device **14** where the medical water production device **14** is a distillation device. The steam may exit the flow path **232** through the offshoot **240** leading through port **236**. After a suitable amount of steam cleansing, the port **236** may be sealed by, for example, an RF seal **254** as shown in FIG. **50**.

As shown in FIG. **50**, the dispensing member **250** (or in some embodiments, a second dispensing member which has been coupled to the opening **249** after removal of the steam dispenser) may output a medical water flow to the flow path **232** of the bus portion **234**. Where a mixture of fluid is provided to the bag **26**, the mixture may be output by the dispensing member **250**. The occluder **252** may be advanced downstream of the first offshoot **238** to a bag **26**. This may place the interior volume of at least one bag **26** into fluid communication with the opening **249**. In some embodiments, the occluder **252** may be displaced to a location on the flow path **232** intermediate the first and second offshoots **238** to bags **26** as is shown in FIG. **50**. In other embodiments, the occluder **252** may be displaced so as to place multiple bags **26** into fluid communication with the opening **249**. An output of medical water or a mixture from the dispensing member **250** may fill the bag **26** to an appropriate amount (e.g. as sensed by a scale or volume displacement sensing arrangement) and the dispensing may be halted. The volume dispensed to a given bag **26** may be order specific and chosen based on an amount of diluent needed for a particular medication order. This may be computed by the control system **15** which may be in communication with a pharmacy order entry system and receives orders therefrom.

As shown in FIG. **51**, a seal **254** may be generated to close the offshoot(s) **238** to any filled bag(s) **26** and the filled bag(s) **26** may be cut from the bus portion **234**. The seal may be created via an RF weld and the sealing process may, for example, be performed as described in FIGS. **22**A-**22**F. Alternatively the seal may be generated similarly to as described in relation to FIGS. **235**-**251**. The occluder **252** may be advanced so as to place the interior volume of an additional bag **26** or bags **26** into fluid communication with the opening **249**. The dispensing member **250** may then output medical water or a medical fluid mixture as described above to fill the bag **26** or bags **26**. As shown in FIG. **52**, this may continue until all bags **26** included in a fill receiving set **24** have been filled. As mentioned elsewhere herein, the fill receiving set **24** may include several dozen bags **26** (e.g. 50-100).

Referring now also to FIG. **53**, the welding, cutting and filling of bags **26** may be a continuous process on a production line **280** in certain embodiments. In such examples, a sheet or sheeting **220** may be drawn from a sheeting source **282** in a continuous manner. The sheeting source **282** may be

a large roll, spool, carton, or the like. The sheeting **220** may first be drawn into a bag/bus former component **284** of the production line **280**. As mentioned elsewhere, the bag/bus former **284** may be a plastic welder such as an RF welder. Sheeting **220** may be indexed through the bag/bus former **284** such that one or more bag is formed in the sheeting **220** at a time. The formed portion of the bag **26** and bus **234** may be cut from the sheeting **220** at a cutter station **286** of the production line **280**. As mentioned elsewhere, this cutter station may include a die cutter. A filling station **290** may fill one or more of the cut out bags **26** with an occluder **288** of the production line **280** blocking off any downstream bags **26** and unformed sections of the sheeting **220**. Filled bags **26** may be sealed off from the bus **234** at a sealing station **292** of the production line **280**. The sealing station **292** may include an RF welder and may include rollers or squeegees as mentioned elsewhere herein. After sealing a bag **26** from the bus **234**, the bag **26** may be cut from the bus **234** by a bag severing station **294** of the production line **280**.

In alternative examples, the production line **280** may form and cut the bags **26** and bus **234** from an amount of sheeting **220**. The production line **280** may not, however, fill the bags **26** and cut them from the bus **234**. In such examples, unfilled bags **26** still attached to the bus **234** may be provided as a fill receiving set **24** to an institution or medical facility having filling, occluding, sealing, and bag severing components. This may help to minimize the amount of floor space needed at the medical facility. In such embodiments, the production line **280** may include a packaging station which applies an over pack around the fill receiving set **24**.

Referring now to FIGS. **54-55**, an example system **10** for producing and packaging medical fluids is shown. As shown, the system **10** is placed in a clean room environment. The system **10** includes an enclosure **12**. In the example embodiment, the enclosure is partitioned into a first section **96** and a second section **98**. As is best shown in FIG. **55** (which depicts the system **10** of FIG. **54** with portions of the enclosure **12** being transparent), the first section **96** may house a medical water production device **14**. In alternative embodiments, the medical water production device **14** may be in a non-clean room (or less stringent clean room) environment with its output plumbed to the clean room. In the example embodiment, the medical water production device **14** is shown as a distillation device which receives water that has been pretreated by a number of filters **100** (e.g. charcoal filters and/or reverse osmosis filters). The first section **96** may include a partition **102** which serves to divide the first section into a hot compartment and a cool compartment. The partition **102** and walls of the first section **96** of the enclosure **12** may include insulation as appropriate to prevent electronics and surfaces elsewhere in the system **10** from being subjected to high temperatures during distillation. The first section **96** may also be topped with a work surface **104** designed to be easily cleanable. For example, the work surface shown in FIG. **54** has rounded corners which minimize the possibility that areas may get missed during cleaning. The work surface **104** may be used to open fill receiving sets **24** or packages of individual bags **26** and manipulate them as needed to get them ready for installation into the system **10** for filling. The first portion **96** of the enclosure **12** may also include a user interface **106** such as a touch screen GUI. This user interface **106** may be used to interact with the medical water production device **14**. The user interface **106** may also provide visual guidance in the form of tutorials (e.g. for wipe down and cleaning of the work surface **104** or other system **10** components or for preparation of a fill receiving set **24**). The user interface **106** may also be used for interacting with the medical water production device **14** and allow for changing of settings and/or display of notifications, alerts, alarms, and other messages related to operation of the medical water production device **14**.

The second portion **98** of the enclosure also includes a user interface **108**. In the example embodiment, the user interface **108** is included on an articulated boom **110**. The boom **110** may include a number of joints which may allow for the user interface **108** to be displaced by a user to a convenient location. The bezel **112** of the user interface **108** may include easily graspable handles which may facilitate displacement of the user interface **108**. The user interface **108** may, for example, be a touch screen GUI.

The user interface(s) **106**, **108** may be used to interact with the components of the system **10** which fill a fill receiving set **24** or, in the example shown, individual bags **26**. The user interface(s) **106**, **108** may also be used to interact with various medical systems of a hospital, urgent care center, surgery center, or similar institution. Such systems **10** may include a physician order input system, pharmacy order entry system, medical record system, continuous quality improvement system, drug error reduction system, inventory systems, laboratory systems, drug administration libraries, etc. Certain example medical systems which may interface with the system **10** are described in further detail in U.S. application Ser. No. 14/137,421, entitled Computer-Implemented Method, System, and Apparatus for Electronic Patient Care, filed Dec. 20, 2013 which is hereby incorporated by reference herein in its entirety. Such systems may track usage of the system **10** for producing and packaging medical fluids and manage orders sent to the system **10**. These other medical systems may also monitor production from the system **10** and perform analysis against actual bag **26** usage within an institution (bag storage time, solution usage by care area, demand per day of week, etc.). Bags **26** may include or be associated with unique identifiers to facilitate data collection for this purpose. These identifiers may be read before or during administration to indicate that the fluid has been used and perhaps where within an institution the fluid is being used. This may allow for better inventory management and minimize storage cost and storage space demand. It may help to allow the system **10** to run as a part of a "just in time" inventory management system. Additionally, it may allow for an additional check to make sure that the fluid being used is the correct fluid (correct volume, concentration, dose, no contraindications, etc.) for a particular patient. Software updates for the system **10** may be provided via these other medical systems as well.

In some instances, the user interface **108** may be used for user credentialing; ensuring only trained or qualified users may operate the system **10** for producing and packaging medical fluids. This may be accomplished via biometrics, face recognition, pass code input, etc. which is checked against a database of approved users or pass-codes. Where biometrics are used, the user interface **106**, **108** or another portion of the system **10** may be equipped with appropriate sensors (e.g. a camera, fingerprint scanner, etc.)

As best shown in FIG. **55**, the second portion **98** of the enclosure **12** may include a storage volume or bay **120**. The storage bay **120** may house at least one bag feeder **128** which is ready to be filled. In the example embodiment, two bag feeders **128** are stowed within the bay **120**. The bag feeders **128** are installed into the system **10** via roll carts **122**. The bag feeders **128** may include a biased platform **124**. The bags **26** may be placed on the platform **124** in a stack. In alternative embodiments, the bags **26** may be included in a

fill receiving set **24** and may be filled via a manifold **20** such as those described elsewhere herein. The bag feeders **128** may also include a top face **126** which may include an orifice through which the bags **26** may be pushed. As a bag **26** is removed from the stack (e.g. by a robotic manipulator, robotic flipper, or vacuum grasper) the biased platform may advance toward the top face of the bag feeder **128**. This may ensure that another bag **26** is available for retrieval from the stack until bag feeder **128** has been completely depleted. As shown, the bias members for the platform **124** are depicted as springs, however, pneumatic, hydraulic or other means of displacing the platform **124** may be used in alternative embodiments.

In the example embodiment, a vacuum grasper **130** is included to pick up the bags **26** and displace them to a filling station or dispenser. In other embodiments, a filling nozzle assembly may be displaced to the topmost bag **26** and coupled to a fill port on the bag **26**. In embodiments where the bags **26** are filled through the administration set **28**, the filling nozzle may couple with an access included on the administration set **28**. The bags **26** may be transferred to a filling compartment **132** of the system **10** for filling. In other embodiments, particularly those in which the administration set **28** or other conduit is integrated into the bag **26**, a flipper may be used. The flipper may include a paddle member which follows underneath the path of the administration set **28** tubing or other conduit to easily get under and separate the bag **26** from the adjacent bag **26**. The flipper may then transport the bag **26** to the filling station. Any suitable vision or sensing system may additionally or alternatively be used to aid in collection and transport of bags **26** off of the stack.

When the connection between the fill nozzle and bag **26** or administration set **28** is made the coupling members may be cleaned. For example, a venting port from a distillation device serving as the medical water production device **14** may be positioned to eject hot vapor on the coupling on the coupling surfaces. Alternatively, the vented hot vapor may pass through the filling nozzle and be ejected at the bag **26** or set's **28** coupling.

Where it is desired to fill the bags **26** with a compendial fluid such as WFI, the fluid may be provided from the medical water production device **14**. In embodiments where the system **10** is arranged to fill the bags **26** with mixed fluid (if desired) the system **10** may include bulk reservoirs **40**, **42**. For purposes of example, the bulk reservoirs **40**, **42** are respectively labeled as 5% Dextrose and 30% Saline. Any other suitable bulk reservoirs **40**, **42** may be utilized and the contents of the reservoirs **40**, **42** would depend on the solutions one desires to produce. Where the solution is a multi-component solution (e.g. Ringer's) bulk reservoirs **40**, **42** for various constituents of the solution may be used. Alternatively, a single bulk reservoir **40**, **42** containing concentrate of a mixture of all of the necessary components for that solution may be used. The system **10** may include a pumping apparatus **134** which meters fluid to send to the bag **26**. The fluids may be metered so as to achieve a desired end concentration of fluid in a given bag **26**. In certain examples, the pumping apparatus **134** may be a cassette based pumping apparatus. One such example apparatus is described in U.S. application Ser. No. 16/384,082, filed Apr. 15, 2019, entitled Medical Treatment System and Methods Using a Plurality of Fluid Line, which is hereby incorporated by reference herein it its entirety. Where the system **10** fills bags **26** with mixed fluid, the system **10** may include a sensing manifold. The sensing manifold may include conductivity and temperature probes which monitor the composition. Other types of composition sensors may also be used. For example, the system **10** may include spectrometers, turbidity meters, pH probes, sensors such as polarimeters for monitoring chiral properties of fluid components, dissolved ion sensors, dissolved oxygen sensors, Redox potential sensors, refractometers, TOC sensors, etc. Similar sensors may also monitor the output from the medical water production device **14** or be integrated therein. Other sensors such as bioburden sensors may also be included. Data from any mixture quality sensors may be sent to the control system **15** of the system **10** for analysis. Data may be compared to predetermined acceptable limits or thresholds for a given fluid type. Such sensors may also be used as a redundant check in addition to water quality testing done by the medical water production device **14**. In embodiments where the system **10** is equipped to mix various fluids, it may be desirable to take a quality reading before expending concentrates into the fluid stream from the medical water production device **14**. The sensors described above, or sensors in another sensing manifold, may check the quality of WFI water output from the medical water production device **14**.

Once a bag **26** has been filled, it may be sealed and then exit the filling compartment **132** to be passed along to a bucket **136** or similar holder which places the bag **26** onto a conveyer assembly **138**. The conveyer assembly **138** may pass bags **26** to a bin or similar storage location which may serve to hold the bags **26** until they are needed for administration. Alternatively, the conveyer assembly **138** may convey the bags **26** to a compounding area where additional medications are introduced to the bag **26** in an automated or manual fashion. In some embodiments, the conveyer assembly **138** may pass bags **26** to one or more automated and/or human inspection stations. Bags **26** may be conveyed to a quarantine station in which they reside until cleared for use in certain embodiments.

In some examples, a sensing assembly may be included to monitor bags **26** which are produced by the system **10**. This sensing assembly may include visual sensors, for example, which image the bag **26**. A processor may perform an image analysis and screen out bags **26** which may have defects. For example, the processor may flag bags **26** which have visible particulate, have an improper color, leaks, excessive air, and other concerns of interest.

Referring now to FIG. **56**, a top down view of another example system **10** for producing and packaging medical fluids is shown. The system **10** may include a medical water production device **14** such as any of those described herein. The system **10** may also include a mixing circuit **348** and a sensor suite **350** which may monitor the quality of purified water produced by the medical water production device **14** as well as mixed fluid generated in the mixing circuit **348**. The sensor suite **350** may include any number of different types of water quality sensors. Any water quality sensors described herein may be included. The mixing circuit **348** and sensor suite **350** may be the example mixing circuit **348** and sensor suite **350** described in relation to FIG. **204** or FIG. **205**.

The system **10** also includes an enclosure **12**. The enclosure **12** may provide a clean room environment for the components of the system **10** contained therein. The enclosure **12** itself may also be contained within a clean room environment. In such embodiments, the enclosure **12** may be maintained at a higher clean room standard than the room in which it is located. In some embodiments, the enclosure **12** may be held at positive pressure by a blower system (not shown in FIG. **56**, see e.g. item **600** of FIG. **177**). In the example embodiment, the enclosure **12** is partitioned into a first section **96** and a second section **98**. Each of these

sections may be held at slightly different positive pressures. For example, the first section **96** may be held at a first pressure which is positive with respect to the surrounding environment. The second section **98** may be held at a pressure higher than the first pressure. Filling of bags **26** may occur in the most stringently controlled environment of the system **10**. Various filters such as HEPA filters may be included to help ensure any air blown into the enclosure **12** to maintain positive pressure is clean.

The first section **96** may be an antechamber which may be utilized for preparing various consumables used by the system **10**. For example, a stock of bags **26** or magazines **30** preloaded with bags **26** may be kept in the antechamber during use. Stopper magazines **466** (see, e.g. FIG. **74**A) may also be stocked within the antechamber. Sampling vials **532** (see, e.g., FIG. **103**) may also be kept in stock within the antechamber. This may help to minimize the need to access the interior of the enclosure **12** during operation of the system **10**. Various racks, shelving, hangers, compartments, or holders may be included to aid in organizing component stocks. The first section **96** may also include certain testing equipment that may be used to verify bags **26** have been filled according to predefined criteria. For example, the first section **96** may include an endotoxin or pyrogen tester such as an Endosafe nexgen-PTS available form Charles River Laboratories, Inc. of Wilmington Mass. Additionally, any sampling ports in the fluid circuit may be accessible via the antechamber. The first section **96** may be constructed as a glove box and include at least one pair of glove interfaces **352** which may be used to interact with components in the antechamber.

The second section **98** may include a bag feeder **354**, filling station **356**, and a sealing station **358**. Bags **26** may be loaded into the bag feeder **354** by a user via the gloved interfaces **352**. Alternatively, fill receiving sets **24** may be used. In the example shown, a bulk container or cartridge of individual bags **26** or preloaded bag dispensers (e.g. magazines) may be held in the antechamber and bags **26** may individually be installed in the bag feeder **354**. In certain embodiments, a plurality of bag feeders **354** each holding different bag **26** types having different fill capacities may be included. A robotic arm **360** including a grasper may collect a bag **26** from the bag feeder **354** and displace the bag **26** to the filling station **356**. Fluid may be dispensed into the bag **26** at the filling station **356**. This fluid may be purified water such as WFI water, or a mixture of fluid generated at a mixing subsystem similar to those described in relation to FIG. **2**A and FIG. **2**B. Bags **26** may also include a concentrate as described above in relation to FIGS. **5**A-**6** for example. From the filling station **356**, the robotic arm **360** may displace the filled bag **26** to a sealing station **358**. An access to the interior volume of the bag **26** may be sealed closed at the sealing station **358** (e.g. via stoppering, RF welding, etc.).

From the sealing station **358**, the bag **26** may be moved to a quarantine repository **362** included within the second section **98** of the enclosure **12**. As bags **26** are filled and sealed they may remain in the quarantine repository **362** for some period of time. For example, prior to the first bag **26** being stored within the quarantine repository **362**, a sampling vial **364** may be brought to the filling station **356**. A volume of fluid may be dispensed to the vial **364**. The vial **364** may then be brought to a tester such as the pyrogen (e.g. endotoxin) tester described above. Once the quarantine repository **362** is full or after a certain number of bags **26** have been placed in the quarantine repository **362**, another vial **364** of fluid may be collected at the filling station **356** and a second test at the tester may be run. Both the pre and post quarantining tests may be required to pass in order for the control system **15** to allow release of the bags **26** from the quarantine repository **362**.

Once the bags **26** have been released from quarantine, the bags **26** may be labeled. In the example embodiment, the second section **98** of the enclosure **12** includes a labeler **366**. The labeler **366** may be any suitable labeler **366** such as a thermal printer. A thermal ribbon transfer type printer may be particularly desirable in certain embodiments. The labeler **366** may generate and facilitate application of a label to each of the bags **26** produced by the system **10**. The labels may be adhered to the bag **26** via an adhesive backing. The label may include information required by any relevant statues or regulations as well as identifying characteristics, tracking information, computer readable indicia, corresponding patient information, instructions for use, etc. Bags **26** may then be expelled from the enclosure **12** through an output **368** which may include a chute which has a gated or doored entry. Bags **26** may exit the enclosure **12** through the output and be ejected into a container or conveyer (neither shown in FIG. **56**) disposed at the outlet of the output **368**.

Referring now to FIG. **57**, a side view of the enclosure **12** depicted in FIG. **56** is shown. As shown, a side panel **370** of the first section **96** of the enclosure **12** is depicted as transparent to allow for viewing of the interior of the antechamber. As shown, the side panel **370** may include ports **372**. The glove interfaces **352** may be mounted into the ports **372** in a fluid tight manner. The glove interfaces **352** may be mounted at a height which is comfortable for an average standing or seated user. The glove interfaces **352** may provide a sterility barrier through which a user may manipulate various components of the system **10** within the enclosure **12**.

Referring now also to FIG. **58**, a side view of the example enclosure with the side panel **370** and glove interfaces **352** removed is depicted. A number of access openings from the first section **96** to second section **98** of the housing **12** may be included. These access openings may include a bag loading door **374**, a bag feeder port **376**, a sealing station port **378** and a vial access door **380**. The bag feeder port **376** may allow access to a portion of the bag feeder **354** to allow the bag feeder **354** to be opened such that bags **26** or a preloaded dispenser of bags **26** such as a magazine may be loaded into the bag feeder **354**. The bag feeder door **374** may be opened so as to allow bags **26** to be passed from the first section **96** to the second section **98** of the enclosure **12** as they are loaded into the bag feeder **354** The sealing station port **378** may provide an opening through which a magazine (e.g. containing a supply of stoppers) may be installed in the sealing station **358**. The vial access door **380** may allow for vials to be introduced and withdrawn from the second section **98** of the enclosure **12** for sample collection and testing. All interaction with these components may be via the glove interfaces **352**. Any doors may include clean room appropriate hinges **382**. In certain embodiments, hinges **382** may be detent hinges which tend to hold the attached door in a prescribed position and resist inadvertent displacement therefrom. Such hinges may also assist the attached door in reaching the prescribed position once the door has been rotated to within a range of the prescribed position. For example, detent hinges which tend to hold the attached door closed may be used. Any door may be paired with at least one respective position sensor **384**. The position sensors **384** may detect whether the doors are in an open or closed state. Any suitable type of sensor may be used, however, inductive or magnetic sensors **384** may be preferred in certain embodi-

ments. An antechamber door **386** may also be provided and may include a lockable latch mechanism **388** which may be used to hold the antechamber door **386** in a closed position. The antechamber door **386** may be paired with at least one position sensor **384** similar to those described above. A control system **15** of the system **10** may monitor the output from the door position sensors **384** and may generate a user interface notification when a door is open. The control system **15** may also prohibit certain actions in the event that a door is open. For example, filling of bags **26** may be prohibited in the event that a door is left open.

Referring now to FIG. **59**, an example embodiment of a bag feeder **354** is depicted. As shown, the bag feeder **354** may include a magazine portion **399** and a housing block **398**. In some embodiments, the magazine portion **399** may be separable from the housing block **399**. In such embodiments, the magazine portion **399** may be provided in a pre-loaded state and coupled to the housing block **398** to ready the bag feeder **354** for use. In the example embodiment, the magazine portion **399** is integrated with and fixed to the housing block **398**. The magazine portion **399** may be opened and loaded with bags **26** by a user and may advance bags **26** through the bag feeder **354** as system **10** consumes bags **26**. In some embodiments, stripper clips or magazine chargers may be provided so as to facilitate loading of the magazine portion **399**. Where preloaded magazine portions **399** or stripper clips are used, these items may come clean and sterilized within an over pack **60** which is doffed once the magazine or stripper clip has entered the antechamber and is ready for use. Alternatively, consumable component such as bags **26** or magazine portions **399** may be transferred into the enclosure via an alpha port and beta container arrangement as described in relation to FIG. **111**.

The magazine portion **399**, in the example embodiment, includes a number of guides **390**. The guides **390** may be sized to accept tubing or ports **392** extending from the bags **26**. In the example embodiments, one of the ports **392** includes fins **394** which may rest atop one of the guides **390** so as to allow the bag to hang from the guides **390**. In the example, the guides **390** are constructed as pairs of rails which extend parallel to one another. A slot may be present between the rails making up each of the guides **390** and may have a width sufficient to accept the port **392** of the bag **26**. The exemplary guides **390** extend from the housing block **398**. The housing block **398** may include channels **400** for the ports **392** to pass through as bags **26** are fed into the second section **98** of the enclosure **12**.

In some embodiments, a blocking plate **405** (see the embodiment in FIG. **64**) may be included between the guides **390**. This may aid in preventing a user from misloading bags **26** in the bag feeder **354** by preventing ports **392** from being displaced into the space between the guides **390**. In some embodiments a straightener member **407** (see the embodiment in FIG. **64**) may also be included. The straightener member **407** may extend parallel to the guides **390** and be positioned so as to block bags **26** from hanging in the guides **390** in a crooked orientation. The straightener member **407** may be spaced from a guide **390** a distance which is at least equal to the distance from a port **392** of the bag **26** to the nearest side edge of that bag **26**.

The magazine portion **399** of the bag feeder **354** may also include a feed plate **396**. The feed plate **396** may be coupled to the housing block **398** via a bias member **401** (best shown in FIG. **64**) which urges the feed plate **396** toward the housing block **398**. The bias member **401** may be constant force spring in various examples. A pair of standoffs **402** may also extend from the housing block **398**. The standoffs **402** may be coupled to a feed plate retainer **403**. In the example embodiment a latch plate **404** which may include a latch **406** is shown. The feed plate **396** may be coupled to a plunger **408** which may be pulled via the glove interfaces **352** to retract the feed plate **396**. The latch **406** may interface with the feed plate **396** to retain the feed plate **396** in a retracted position where it is spaced a distance from the guides **390**. This may allow a user to load bags **26** into the magazine portion **399**. In alternative embodiments, a magnetic latching arrangement similar to that described in relation to FIG. **73** may be used in place of the latch **406**.

In some embodiments, the latch **406** may be biased toward a latching position (e.g. via a torsion spring). When the feed plate **396** is withdrawn via the plunger **408** the latch **406** may be pushed out of the way and automatically displace into a latching engagement with the feed plate **396** when the feed plate **396** has been withdrawn to a predefined open position. The latch **406** may include a sloped or ramped face **410** (see, e.g. FIG. **61**) which may facilitate movement of the latch **406** out of an obstructing orientation as the feed plate **396** is withdrawn into contact with the latch **406**. The latch **406** may also include a depression **412** which may aid in operation of the latch **406** through the glove interface **352**.

Referring now to FIG. **60**, the exemplary bag feeder **354** of FIG. **59** is shown fully loaded with bags **26**. In the example embodiments, the bag feeder **354** has a capacity of sixteen bags **26**, however, a greater or lesser number of bags **26** may be capable of being installed in alternative embodiments. Once full, and referring now also to FIG. **61**, the latch **406** may be displaced out of engagement with the feed plate **396**. The exemplary feed plate **396** may then, under force exerted by a bias member **401** (best shown in FIG. **64**) connecting the feed plate **396** to the housing block **398**, displace into contact with the last bag **26** in the bag feeder **354**.

Referring now to FIG. **62**, the feed plate **396** is shown in position against the last bag **26** installed in the bag feeder **354**. As shown, the feed plate **396** may slide along two elongate members **414**. At least one of the elongate members **414** may also act as one of the rods forming one of the guides **390**. The feed plate **396** may also include projections **416** which may be spaced so as to press against the ports **392** of the bags **26**. This may help to ensure that the bags **26** are held in a compact and space efficient manner within the bag feeder **354**. The projections **416** may be sized so as to fit within the slots of each guide **390**. Additionally, the projections **416** may ensure that the last bag **26** loaded into the magazine portion **399** can advance an appropriate distance through the channels **400** in the housing block **398** when the feed plate **396** is displaced to the end of its displacement range along the elongate members **414**. The feed plate **396** may be at an end of its displacement range when it is drawn up against a stop face **397** (see FIG. **59**) of the housing block **398**. The projections **416** may extend a distance which is at least equal to a distance from the stop face **397** to the retention pins **420** in some examples. In other examples the projections **416** may extend a distance which is equal to a distance from the stop face **397** to the retention pins **420** minus a percentage of the diameter of a port **392**.

Referring primarily to FIG. **63**, a gripper or grasper **418** attached to the robotic arm **360** (not shown for sake of illustration, see, e.g., FIG. **56**) of the system **10** may collect bags **26** from the bag feeder **354** as needed. As shown, each of the guides **390** may be associated with one or more retention pins **420**. The retention pins **420** may hold the foremost bag **26** in the bag feeder **354** against the force exerted by the feed plate **396**. In the example embodiments,

two retentions pins **420** on opposing sides of each channel **400** are included. The example retention pins **420** may be disposed to protrude into the path of bags **26** transiting through the channels **400** of the housing block **398** and obstruct passage of the ports **392** attached to each bag **26**. In some embodiments, the retention pins **420** may be disposed at a 10-20° (e.g. 15°) angle with respect to the axis of the guides **390**.

The retention pins **420** may be biased to an obstructing position, but may be displaceable to a withdrawn position where the retention pins **420** are at least partially pressed into the housing block **398** and out of interference with the transit path of the bags **26**. In certain embodiments and as shown in FIG. **64**, the grasper **418** may be configured such that, when open, the jaws **422**A, B of the grasper **418** may be appropriately spaced so as to actuate the retention pins **420** from the obstructing position to the withdrawn position when the grasper **418** is advanced toward the bag feeder **354**. When the grasper **418** is displaced to the bag feeder **354**, the jaws **422**A, B may press the retention pins **420** into a retracted state. The jaws **422** A, B may support the fin **394** of the port **392** on the bag **26** such that the bag **26** does not fall when the retention pins **420** are retracted. The force exerted by the feed plate **396** may aid in pushing the foremost bag **26** into the grasper **418** jaws A, B. The coefficient of friction of the grasper **418** material and the ports **392** under the force exerted by the feed plate **396** may be sufficient to hold the bag **26** in place prior to closure of the jaws **422**A, B. Similar retention pins **420** may be incorporated into the bag feeder **28** described in relation to FIGS. **54-55**.

The grasper **418** may include a driver **419** which includes one or more actuator for displacing the jaws **422**A, B. Additionally, a jaw position sensor **423** may be included. The jaw position sensor **423** may monitor the location of the jaws **422**A, B via a magnetic field based sensor such as an inductive or hall effect sensor. The control system **15** of the system **10** may check the output of the jaw position sensor **423** to determine whether a bag **26** has been properly grasped by the grasper **418**. In some embodiments, control system **15** may compare the position output of the jaw position sensor **423** to a predefined range of acceptable positions. In the event that the jaws **422**A, B are displaced to an extreme of their displacement range (e.g. have fully closed) the control system **15** may deduce that the grasper **418** has missed the bag **26**. If the jaws **422**A, B displace outside of the predefined range, but not to an extreme of the displacement range, the control system **15** may deduce that the grasper has improperly grasped (e.g. only partially grasped a segment of a port **392** as opposed to closing around the port **392** as shown in FIG. **65**). When the control system **15** determines that the position output of the jaw position sensor **423** is out the predefined range, the control system **15** may command the grasper **418** to retry. There may be a cap on the number of allowed retries before the control system **15** may generate an error. Though the jaw position sensor **423** may be monitored when a bag **26** is retrieved from a bag feeder **354**, the control system **15** may also perform this check any other time a bag **26** is grasped **418** within the system **10**.

Referring now primarily to FIG. **65**, once the jaws **422**A, B are closed around the ports **392**, the foremost bag **26** may be removed from the bag feeder **354** and displaced to, for example, a filling station **356** by the robotic arm **360** (only the gripper **418** of the robotic arm **360** is shown for ease of illustration). The feed plate **396** may advance under the force of the bias member **401** (best shown in FIG. **64**) attaching it to the housing block **398**. Additionally, the retention pins **420** may be urged back to an obstructing position as the gripper **418** is displaced away from the bag feeder **354**. Thus the next bag **26** in the bag feeder **354** may be advanced and ready for collection by the gripper **418**.

Referring now to FIG. **66**, an exemplary filling station **356** is depicted. As shown, a filling station **356** may include a fill nozzle **430** which may be connected to a fluid input line **432**. The fluid input line **432** may carry purified water or a mixed fluid (e.g. saline) that has passed through the sensor suite **350** and deemed to be acceptable. The fill nozzle **430** may be disposed above and in alignment with a drain **434**. The drain inlet **434** may include a tapered funnel like opening which leads to a drain conduit **436**. As shown, the drain conduit **436** has a larger diameter than the fluid input line **432**. In the example, the drain conduit **436** diameter may be three times that of the fluid input line **432**. This may help to ensure that the drain conduit **436** has the capacity to carry undesired flow or drips from the fill nozzle **430**.

The fill station **354** may also include a back plate **442** which extends from a fill station housing block **438**. The back plate **442** may include a number of mounting points for bag characteristic sensors **444**A, B, C. The bag characteristic sensors **444**A-C may be any suitable sensor capable of collecting data on differentiating traits of various bags which may be utilized with the system **10**. The bag characteristic sensors **444**A-C may sense presence or absence of bag **26** material, color, shape, size, etc. Preferably, the bag characteristic sensors **444**A-C are sufficient to identify at least the volume of the bag **26** in place at the filling station **356**.

In the exemplary embodiment, the bag characteristic sensors **444**A-C are positioned so as collect information sufficient to determine the type of bag **26** being docked on the filling station **356**. The exemplary bag characteristic sensors **444**A-C may, for instance, be beam break or reflection based sensors which can determine the presence or absence of bag material in their vicinity. In the example embodiments, a bag presence detector **444**B is included and may determine whether a bag **26** has been docked in the fill station **354**. The bag presence detector **444**B may be mounted on the back plate **442** in a position where it may detect any of a variety of types of bags **26** (e.g. mini-bag to a liter or more capacity) which may be used in the system **10**. The filling station **356** may be inhibited from dispensing liquid via the control system **15** in the event that the bag presence detector **444**B does not detect a bag **26** is in place at the fill station **356**. A bag width detector **444**A may be included and mounted at a location on the back plate **442** where it may detect whether the width of a bag **26** is greater than a certain value. The width detector **444**A may be placed more proximal the filling nozzle **430** so as to ensure any bag **26** with a width greater than a threshold width value (regardless of its length) will be picked up by the width detector **444**A. A bag length detector **444**C may be mounted on the back plate **442** in a location where it may detect whether the bag **26** is longer than a certain value. The bag length detector **444**C may be disposed most distal to the fill nozzle **430**. Based on the data collected by the bag characteristic sensors **444**A-C, the control system **15** may determine the type of bag **26** docked in the filling station **356**. The control system **15** may, for example, determine the intended fill volume of the bag **26** based on data collected from the bag characteristic sensors **444**A-C and ensure that the bag **26** is not overfilled. A look-up table or the like may be used to determine the intended bag **26** fill volume based on the output of each of the bag characteristic sensors **444**A-C. Other embodiments may include additional bag character-

istic sensors **444**A-C. For example, certain embodiments may include additional width or length detectors **444**A, C to provide additional data related to bag **26** dimensions. In some embodiments each bag characteristic sensor **444**A-C may be accompanied by a redundant sensor.

In the example embodiment, the drain inlet **434** and attached drain conduit **436** may be pivotally or otherwise displaceably coupled to the fill station housing block **438**. As a bag **26** is introduced to the filling station **356** with the grasper **418**, the jaws **422**A, B of the grasper **418** may drive the drain inlet **434** and drain conduit **436** to a retracted position. As shown in FIG. **67**, the filling station **356** may include a fill station grasper **440**. The fill station grasper **440** may be opened by a grasper driver **446** to accept the ports **392** of the bag **26** and driven closed once the robotic arm **360** (see, e.g., FIG. **56**) has displaced to preprogrammed bag **26** docking coordinates. Coordination of the fill station grasper **440** and the robotic arm **360** may be orchestrated by the control system **15**.

As shown in FIG. **68**, the grasper **418** attached to the robotic arm **360** (see, e.g., FIG. **56**) may be displaced away from the filling station **356** during filling of a bag **26**. The grasper **418** may be used to perform other operations within the enclosure **12** as the bag **26** docked on the filling station **356** is filled. For example, the grasper **418** may be used to retrieve, label, and dispense finished bags **26** from the quarantine repository **362** while a bag **26** is being filled at the filling station **356**. Once a bag **26** has been filled to the desired amount (e.g. as indicated by one or more flow meter in the sensor suite **350** or mixing circuit **348**), the grasper **418** may return and collect the filled bag **26** from the fill station **354**. As shown in FIG. **69**, the jaws **422**A, B of the grasper **418** may be actuated closed around the ports **392** of the filled bag **26** and the fill station grasper **440** may be driven open by the grasper driver **446**. In certain embodiments, the robotic arm **360** may not be displaced away from the fill station **356** under various circumstances. For example, where a small 100 mL bag **26** is to be filled, the robotic arm **360** may stay in place as the fill time for the bag **26** should be miniscule. Where a large bag **26** (e.g. a few liters) is filled, the grasper **418** may be displaced away from the fill station **356** as the fill time may have a duration which would allow the robotic arm **360** to complete one or more other task.

Referring now to FIG. **70**, the grasper **418** may remove the filled bag **26** from the filling station **356**. The filled bag **26** may be brought to the sealing station **358** after retrieval from the filling station **356**. As shown, the drain inlet **434** may automatically return into alignment with the filling nozzle **430** when the bag **26** is collected from the filling station **356**. A bias member (see. e.g., torsion spring, bias member **454** of FIG. **71**B) may be included to facilitate this automatic return of the drain inlet **434** to an aligned position in line with the fill nozzle **430**.

Referring now also to FIGS. **71**A and **71**B, the drain inlet **434** may be attached to a flange **448** which may pivotally mount the drain inlet **434** to the filling station housing block **438**. Flange **448** and drain inlet **434** may pivot between a retracted position and an aligned position as described above. The flange **448** and drain inlet **434** may be biased to the aligned position by a bias member. In the example embodiment, the flange **448** may include a track **450** within which a pin **452** extending from the filling station housing block **438** is disposed. As the pin **452** within the track **450** is attached to the filling station housing block **438**, the pin **452** may remain stationary. At least one bias member **454** may be coupled to the pin **452** as well as to a mount pin **456** included on the flange **448**. The mount pin **456** may be displaceable with the flange **448** and drain inlet **434**. In the example, one bias member **454** is depicted and is shown as an extension spring, though other types of bias members **454** may be used in alternative embodiments. As shown, when the drain inlet **434** is displaced, the track **450** may ride along the stationary pin **452**. The distance between the mount pin **456** and the stationary pin **452** may increase and the bias member **454** may be extended (see, e.g., FIG. **71**B). As the bias member **454** restores (e.g. after the bag **26** has been filled and removed), the track **450** may ride along the pin **452** until the distance between the two pins **452**, **456** is minimized or the bias member **454** returns to a resting state. As shown, this may automatically pivot the drain inlet **434** back to an aligned state with respect to the fill nozzle **430** (see, e.g., FIG. **71**A). In alternative embodiments, the pivot pin **451** coupling the flange **448** to the housing block **438** may be paired with a torsion spring which serves as the bias member **454**. In such embodiments the extension spring may be omitted.

As shown, the filling station **356** may include a drain inlet sensor **437**. The drain inlet sensor **437** may monitor the location of the drain inlet **434**. The drain inlet sensor **437** may be any suitable sensor, for example a magnetic field sensor such as an inductive sensor or hall effect sensor. In some embodiments, the drain inlet **434** or flange may include a magnetic or metallic body which is monitored by the drain inlet sensor **437**. The drain inlet sensor **437** may alternatively be an optical sensor. The control system **15** may receive an output signal from the drain inlet sensor **437** and ensure that the drain inlet **434** is disposed in an expected position. For example, the control system **15** may verify that the drain inlet **434** returns to an aligned state with respect to the filling nozzle **430** after a bag **26** has been filled and removed. Additionally, the control system **15** may check the output of the drain inlet sensor **437** to ensure that the drain inlet **434** is in the aligned state under the filling nozzle **430** prior to commanding a flush of the filling nozzle **430** or a disinfect of the fluid circuit. During disinfection, hot purified water may be delivered through the fluid circuit and discarded through the filling nozzle **430** into the drain inlet **434**.

Referring now to FIG. **72**, an example embodiment of a sealing station **358** is shown. As shown, the sealing station **358** may include a base plate **460**. A ram driver **462** may be mounted to the base plate **460**. The ram driver **462** may effect displacement of a ram **464** which may drive a stopper into a port **392** of a bag **26**. In some embodiments, the ram driver **464** may be capable of exerting at least 100 lbs of force against a stopper **476** during stoppering of bags **26**. A rest **463** may be attached to the base plate **460**. A grasper **418** holding a bag **26** may be docked on a docking face (e.g. top face) of the rest **463** during sealing of the bag **26** so as to buttress the grasper **418** against the force exerted by the ram driver **462**. In the example embodiment, the rest **463** is depicted as a metal shelf though any suitable material may be used. In the example, two rests **463** are shown. The rests **463** may also act as guides. As shown, the two rests **463** may be spaced apart by a gap which may allow a bag **26** to be positioned between the rests **463**. A bag **26** may be displaced into this gap to aid in positioning of the bag **26** port **392** in alignment with the axis of displacement of the ram **464**.

A stopper dispenser which in the example embodiment which is depicted as a stopper magazine **466** is also included in the example sealing station **358**. The stopper magazine **466** may dock into a magazine receptacle **468** in the sealing station **358**. The stopper magazine **466** may include an opening **472** which is aligned and sized to allow passage of

the ram **464** when the stopper magazine **466** is in place at the magazine receptacle **468**. A follower assembly **470** may be included to automatically advance stoppers through the stopper magazine **466** as stoppers are dispensed.

Referring now to FIG. **73**, in the example embodiment, the stopper magazine **466** may be provided in a preloaded state. The stopper magazine **466** may be packaged clean and sterile within an over pack **60** which is opened in the antechamber of the system **10**. In the example embodiment, the stopper magazine **466** has a capacity of 22 stoppers **476**, however, in other embodiments, the capacity of the stopper magazine **466** may be less or may be greater. In the example embodiment, a cover plate **474** (see, e.g. FIG. **72**) has been removed so as to shown the stoppers **476**. After removing the stopper magazine **466** from its over pack **60**, the stopper magazine **466** may be docked onto the magazine receptacle **472**. In certain embodiments, the magazine receptacle **472** may accept a variety of different stopper magazine **466** varieties. For example, certain embodiments may have a magazine receptacle **472** capable of accepting any of the stopper magazines **466** shown and described herein. This may allow a user to use stopper magazines **466** of differing capacities as desired. In some embodiments, the stopper magazine **466** may not be a removable magazine. Instead, a fixed magazine may be included which is loaded manually or with the assistance of a speed loader while in place on the base plate **460** by an operator of the system **10**.

To load the example stopper magazine **466** into the sealing station **358**, the follower assembly **470** may be retracted by the user. As shown, the follower assembly **470** may include a handle **478**. The handle **478** may allow a user to easily pull the follower **482** of the follower assembly **470** into a loading state via the gloved interface **352**. In some embodiments, a latch similar to that shown in FIG. **59** may be included to retain the follower assembly **470** in the open state. When the follower assembly **470** is in a loading state, the follower **482** may be displaced to a point where sufficient clearance is present to mate the stopper magazine **466** in place on the magazine receptacle **472**.

The handle **478** may be coupled to a follower block **480**. The follower block **480** may include a follower **482**. The follower block **480** may be coupled to the magazine receptacle **472** via a bias member **484**. In the example embodiment, the bias member **484** is depicted as a constant force spring, however, in other embodiments, other types of bias members **484** may be used. The bias member **484** may exert a force against the follower block **480** which maintains the follower **482** in intimate contact with the last stopper or stoppers **476** in the stopper magazine **466**. The follower block **480** may displace along one or more follower guides **502** which constrain movement of the follower **482** along a prescribed path. In the example embodiment an end block **504** is included on the end of the guides **502** most distal to the magazine receptacle **472**. The end block may include a magnet **500**. The magnet **500** may interact with a metallic portion of the follower block **480** so as to retain the follower assembly **470** in an open position while loading of the stopper magazine **466** occurs.

The example stopper magazine **466** is shown as a multi-column magazine. The follower **482** includes a staggering projection **486** which extends from the stopper contacting portion of the follower **482**. The staggering projection **486** may aid in ensuring orderly feeding of stoppers **476** as the stopper magazine **466** depletes. The staggering projection **486** may encourage stoppers **476** in one column to be offset from stoppers **476** in an adjacent column. This may aid in preventing jamming and facilitate movement of a single stopper **466** from the multiple columns to the opening **472** (see, e.g., FIG. **72**) in the stopper magazine **466**.

Referring now also to FIGS. **74**A and **74**B, views of the example stopper magazine **466** are shown. As shown, the stopper magazine **466** may include a magazine body **508**. The magazine body **508** may include a number of stopper troughs **510** recessed therein. A divider wall **488** may separate and partially define each trough **510**. The stopper magazine **466** may also include ridges **490** which flank each trough **510**. Any divider wall(s) **488** and the ridges **490** may be at an even height with one another. In some examples, the stoppers **476** may include sections of varying diameter. The ridges **490** and dividing wall **488** may have a height which is selected such that a step region **512** on the stopper **476** where the stopper **476** transitions to a larger diameter may ride along the top face of the ridges **490** and the dividing wall **488**. As shown, the stopper magazine **466** may also include a slit **492**. The slit **492** may allow for passage of a portion of the follower assembly **470** including the follower **482** to pass into the stopper magazine **466** and displace within the stopper magazine **466**.

In the example embodiment, the stopper magazine **466** includes mating features which may facilitate mounting of the stopper magazine **466** onto the magazine receptacle **472**. In the example embodiment, two mounting or mating pins **494** are included in the stopper magazine **466**. These mating pins **494** may be received in alignment holes within the magazine receptacle **472**. In certain embodiments, the mating pins **494**, a portion of the alignment holes, or both may be magnetic. This may allow a stopper magazine **466** to be magnetically coupled into place in the magazine receptacle **472**. The magazine receptacle **472** may also include a magazine sensor **473** (see, e.g., FIG. **77**B). A hall effect or inductive sensor which may register proper mating of the stopper magazine **466** in the magazine receptacle **472** may be used in some examples. Other types of sensors such as micro switches, optical sensors, button type sensors, etc. may also be used to monitor whether a stopper magazine **466** is mounted in the magazine receptacle **472**. In some embodiments, a magnetic body for sensing by a magnetic magazine sensor **473** may be include elsewhere in a stopper magazine **466**. In some embodiments, the control system **15** of the system **10** may not allow displacement of the ram **464** unless the magazine sensor **473** indicates a stopper magazine **466** is mounted in the magazine receptacle **472**.

Referring now also to FIGS. **75**-**77**B, a stopper magazine **466** may include a blocking element which inhibits premature release of stoppers **476** from the stopper magazine **466**. The example stopper magazine **466** includes a displaceable handle **496**. The displaceable handle **496** may include a loop, flange, or similar feature which allows a user to easily pull on the displaceable handle **496** through the glove interfaces **352** of the system **10**. The displaceable handle **496** may be coupled to an outlet cover **498** (see, e.g. FIG. **74**A). The outlet cover **498** may block exit of stoppers **476** from the stopper magazine **466**. The displaceable handle **496** may be integral with the outlet cover **498** (best shown in FIG. **74**B) or may be coupled thereto via a linkage. When the user displaces the displaceable handle **496**, the outlet cover **498** may be displaced or withdrawn away from a blocking position allowing passage of stoppers **476** out of the stopper magazine **466**. The displaceable handle **496** may be displaced along a guide slot **506** included in the body **508** of the stopper magazine **466**. In some embodiments, the displaceable handle **496** may be completely removed from the stopper magazine **466** before use.

In operation, and as shown in FIG. **75**, the user may position the follower **482** against the stoppers **476** within the stopper magazine **466** prior to actuation of the outlet cover **498** to the withdrawn state. Thus, when the outlet cover **498** and displaceable handle **496** are displaced as depicted in FIG. **76**-**77**A, the stopper **476** aligned with the exit port **514** from the stopper magazine **466** may be frictionally retained within the stopper magazine **466** via the application of force exerted through the follower **482** via the bias member **484**. Only the head portion of this stopper **476** may be frictionally held in place against the stopper magazine **466**. The stem portion of the stopper **476** may be out of contact with the stopper magazine **466**. With the follower **482** deployed against the stoppers **476** and the outlet cover **498** withdrawn, the sealing station **358** may be considered to be in a ready state.

Referring now to FIG. **78**, when the sealing station **358** is in a ready state, the robotic arm **360** may displace a bag **26** to the sealing station **358** via the gripper **410**. The gripper **410** may align the port **392** of the bag **26** to be sealed under the exit port **514** of the stopper magazine **466**. The control system **15** may command the ram driver **462** to displace the ram **464** through the opening **472** of the stopper magazine **466**. The ram **464** may contact the head portion of the stopper **476** and the stopper **476** may begin to displace along with the ram **464**. In the example embodiment, the driven stopper **476** may travel along a guide portion **516** of the stopper magazine **466** as it is displaced toward the port **392** of the bag **26**. This guide portion **516** may ensure that the stopper **476** displaces substantially in line with the axis of the port **392**. The stem or smaller diameter portion of the stopper **476** may enter the port **392** of the bag **26** prior to the stopper **476** displacing beyond the guide portion **516** of the stopper magazine **466**. The ram **464** may continue to be driven by the ram driver **462** until the step **512** of the stopper **476** is against the top of the port **392**. In certain embodiments, the ram **464** may be displaced until at least a threshold amount of the stem or small diameter portion stopper **476** is within the port **392**. For example, the stopper **476** may be driven until at least 75% of the stem is within the port **392**. The control system **15** may monitor position feedback from the ram driver **462** to determine the travel distance of the stem portion of the stopper **476** into the port **392**.

As mentioned above, in some examples, the control system **15** may prohibit displacement of the ram **464** unless a magazine sensor **473** (see, e.g., FIG. **77**B) registers a stopper magazine **466** is properly loaded into the sealing station **358**. In certain embodiments, the control system **15** may also monitor data from a bag detection sensor. In some embodiments a port detection sensor **475** which monitors for the presence of a port **392** of a bag **26** may, for example be used. The port detection sensor **475** may be an optical sensor such as a reflectivity based sensor. Such a sensor may for example monitor an intensity of reflection of light emitted from the sensor. The port detection sensor **475** may detect whether a port **392** of a bag **26** is in a proper location for stoppering. The control system **15** may prohibit displacement of the ram **464** unless the port detection sensor **475** indicates that a port **392** is in proper position.

Referring now to FIG. **79**, once the stopper **476** is in sealing engagement with the port **392**, the ram **464** may be withdrawn. The control system **15** may command the ram driver **462** to withdraw the ram **464** and the follower assembly **470** may automatically advance stoppers **476** in the stopper magazine **466** such that the next stopper **476** in the stopper magazine **466** is aligned with the exit port **514** of the stopper magazine **466**. As shown in FIG. **80**, the sealed bag **26** may then be displaced from the sealing station **358** to a quarantine repository **362**.

Referring now to FIGS. **81**A-**81**B, in some embodiments, a sealing station **358** may accept a different stopper magazine **466** or may be designed to accept a variety of stopper magazines **466** having different styles, capacities, or containing different stopper **476** types and sizes. Single column magazines, drum type magazines, or any other suitable type of stopper magazine **466** may for example be used. A modified version of the stopper magazine **466** shown in FIGS. **74**A and **74**B is depicted in FIGS. **81**A-**81**B. As shown, the exit port **514** of stopper magazine **466** is an elongate shape which extends all the way to the front end of the stopper magazine **466**. The elongate shape may allow for greater alignment tolerances as stoppers **476** are displaced out of the exit port **514**. Additionally, the walls of the exit port **514** may include a guide portion disposed at a portion of the exit port **514** wall adjacent the exterior face of the magazine body **506**. The guide portion may include chamfer **477** or fillet in some embodiments which is applied to the edge where the exit port **514** and exterior face of the magazine body **506** meet. Such a chamfered exit port **514** may be included on any of the stopper magazines **466** described herein.

Referring now to FIG. **81**C, in certain embodiments, the port **392** of the bag **26** may be displaced into the stopper magazine **466** exit port **514** prior to sealing of the port **392**. The chamfer **477** on the exit port **514** of the stopper magazine **466** may be designed to facilitate this action. As shown in FIG. **81**C, the ram **464** may be driven into the stopper magazine **466** until the ram **464** contacts the stopper **476** which is in line with the exit port **514**. The ram **464** may be parked in this position and the grasper **418** may raise the bag **26** such that the stopper **476** is partially installed (e.g. no more than 25-35%) into the port **392**. The ram **464** may block the stopper **476** from being pushed upward as this occurs. The chamfer **477** on the exit port **514** of the stopper magazine **466** may funnel or direct the port **392** of the bag **26** into alignment with the stem or smaller diameter section of the stopper **476**. Once the stopper **476** is partially installed in the port **392**, the ram **464** may then be actuated by the ram driver **462** to complete installation of the stopper **476** into the port **392** to seal the bag **26**.

Referring now to FIGS. **82**A-C views of another exemplary stopper magazine **466** are shown. As shown, the example stopper magazine **466** includes an exit port **514** with a chamfer **477**. As above, the chamfer **477** may funnel or direct the port **392** of the bag **26** into alignment with the stem or smaller diameter section of the stopper **476**. Additionally, as best shown in FIG. **82**C, a detent member **479** may be included in the wall of the exit port **514**. Such detent members **479** may be included in any of the stopper magazines **466** described herein. The detent member **479** in the example embodiment include a ball type detent. The detent member **479** may be a barb, bump, or other protuberance in alternative embodiments. The detent member **479** may project into the exit path of a stopper **476** traveling through the exit port **514**. The step region **512** of a stopper **476** may catch on the detent member **479** aiding in retaining the stopper **476** within the stopper magazine **466**. As shown best in FIG. **82**A, embodiments including a detent member **479** may omit a displaceable handle **496** coupled to an outlet cover **498** (see, e.g. FIG. **74**B) and the accompanying guide track **506** (see, e.g. FIG. **74**B).

Referring now to FIG. **83**, an exemplary drum type stopper magazine **466** is depicted. The stopper magazine **466**

may include a drum body **630**. The drum body **630** may include a spiral trough or track **632** which may have a depth sufficient to accept stoppers **476** therein. The stopper magazine **466** may also include a bias member such as a constant force spring **634**. The constant force spring **634** may be connected to a follower **636** that may be placed behind the last stopper **476** in the stopper magazine **466**. The stopper magazine **466** may also include a removable cover member (not shown) which may be placed on the stopper magazine **466** to enclose the stoppers **476** within the stopper magazine **466**. The example drum type stopper magazine **466** has a capacity of 64 stoppers **476**. In other embodiments, the capacity may be higher (e.g. up to 100 or more) or lower (e.g. 50 or less).

Referring now to FIGS. **84-86**, as the stopper magazine **466** is depleted, the constant force spring **634** may pull the follower **636** along the spiral path **632** of in the drum body **630**. This may in turn advance the remaining stoppers **476** in the stopper magazine **466**. As shown, the spiral path **632** may include a trough portion **640**. The trough portion **640** may accept the stem or small diameter section of each of the stoppers **476**. Thus the trough portion **640** may act as a guide for the stoppers **476** as they are displaced along the spiral path **632**. The follower **636** may be sized to ride along the trough **640** in certain embodiments and thus the trough portion **640** may also act as a follower guide during operation. The trough portion **640** may be flanked on each side by a ledge **642** upon which the step region **512** of the stoppers **476** may rest.

The stopper magazine **466** is shown empty in FIG. **86**. As shown, the exit port **638** for the stoppers **476** may be sized to substantially match the dimensions of the head or larger diameter portion of the stoppers **476**. Additionally, the exit port **638** may be at least partially surrounded by a guide wall **644**. The guide wall **644** may be positioned in front of the exit port **638** so as to prevent the constant force spring **634** from advancing stoppers **476** beyond the exit portion **638**. The guide wall **644** may also have a guide face **646** with a curvature which helps to position the head portion of the stoppers **476** in alignment with the exit port **638**.

Though not shown in FIG. **86**, mating pins **492** (see, e.g., FIG. **74**A) may be included. The mating pins **492** may aid in mounting of the stopper magazine **466** in the magazine receptacle **472**. The mating pins **492** may also allow for a magazine sensor **473** to detect the presence of the stopper magazine **466** at the magazine receptacle **472**.

Referring now to FIG. **87**, an exploded view of another example stopper magazine **466** is depicted. As shown, the stopper magazine **466** in FIG. **87** is a drum type magazine. The stopper magazine **466** may include a drum body **650** with a spiral trough or track **654** formed therein. A rotor element **656** may also be included and may include a number of flutes **658** which extend therethrough. The flutes **658** may be sized to accept stoppers **476** therein. A bias assembly **652** may also be included in the example stopper magazine **466**. In the example embodiment, the biasing assembly **652** may include a torsion spring or a wound spring **660** as in the example embodiment. A portion of the wound spring **660** may be attached to a spindle **662** included in the bias assembly **652** which extends through the drum body **650** and the rotor **656**. Typically, the wound spring **660** may be included within a housing which is not depicted in FIG. **87** to better show the wound spring **660**. The spindle **662** may include a keyed segment **664** which interfaces with the rotor **656**. In the example embodiment, the keyed segment **664** is "D" shaped and may ensure that the rotor **656** rotates in tandem with the spindle **662**. In other embodiments, the keyed segment **664** may have a different cross sectional shape such as a square shape or star shape. In operation, a user may grasp a knob **666** attached to the spindle to rotate the spindle **662**. This may cause the wound spring **660** to store energy which may be used to turn the rotor **656** and advance stoppers **476** along the spiral track **654**. The stopper magazine **466** may also include a removable cover member (not shown) which may be placed on the stopper magazine **466** to enclose the stoppers **476** and rotor **656** within the stopper magazine **466**. As in other stopper magazine **466** embodiments, mating pins **492** (see, e.g., FIG. **74**B) may be included to aid in mounting and detection of the stopper magazine **466** in the magazine receptacle **473**.

Referring now to FIG. **88**, top down view of the example stopper magazine **466** of FIG. **87** is depicted. As shown, the stopper magazine **466** is fully loaded with stoppers **476**. The example stopper magazine **466** has a capacity of 108 stoppers **476** in the example embodiment, though as with other stopper magazines **466** described herein, the capacity may be lower or greater depending on the embodiment. As shown, the flutes **658** are of different lengths and extend toward the center of the rotor **656** from the periphery of the rotor **656**. This variety of different length flutes **658** may increase the space efficiency of the stopper magazine **466** and allow for a large number of stoppers **476** to be loaded into the stopper magazine **466**.

Still referring to FIG. **88**, a stopper **476** is depicted at the exit port **668** of the stopper magazine **466**. The edge of the flute **658** in which the stopper **476** was disposed may press against the head portion of the stopper **476**. As the bias assembly **652** of the stopper magazine **466** may be preloaded as the stopper magazine **466** is operated, the flute **658** may exert a force against the stopper **476** which is sufficient to frictionally retain the stopper **476** against the wall of the exit port **668**. Additionally, the stopper **476** at the exit port **668** may present an interference to the wall of the flute **658** which inhibits the rotor **656** from displacing under the force of the bias assembly **652**. When the stopper **476** is driven out of the stopper magazine **466** by a ram **464** or the like (see, FIG. **89**), the interference may be removed and the rotor **656** may be free to rotate. The rotor **656** may displace pushing the stoppers **476** along the spiral track **654** of the drum body **650** as shown in FIG. **90**. This may advance a next stopper **476** into the exit port **668** which may again present an interference to further displacement of the rotor **656**.

Referring now to FIG. **91**, as the stopper magazine **466** depletes, smaller flutes **658** of the rotor **656** may be emptied of stoppers **476**. The exemplary stopper magazine **466** is arranged to automatically index to the next available stopper **476** and will automatically skip any empty flutes **658**. In the example shown in FIG. **91**, the stopper **476** at the exit port **668** is separated from the next available stopper **476** by two empty flutes **658**. When the stopper **476** is discharged from the exit port **668** (see FIG. **92**), the rotor **656** may be free to advance until the next stopper **476** enters into alignment with the exit port **668** and presents an interference to further movement of the rotor **656** as shown in FIG. **93**. Thus the stopper magazine **466** may automatically index to the next stopper **476** even when the rotational displacement needed is variable. It should be noted that in other embodiments, other rotor drive assemblies in additional to the bias assembly **652** shown may be utilized. For example, a motorized displacement assembly may be included in place of the bias assembly **652**. In such examples, the control system **15** may track the number of stoppers **476** dispensed from the magazine **466** and use this count to ensure that the motorized displace-

ment assembly drives the rotor **656** an amount appropriate to advance the next stopper **476** to the exit port **668**.

Referring now to FIG. **94**, an exploded view of another stopper magazine **466** is shown. As shown, the stopper magazine **466** may include a magazine body **670**. The magazine body **670** may include a trough **672**. The trough **672** may accept the stem or smaller diameter section of each of the stoppers **476**. Thus the trough portion **672** may act as a guide for the stoppers **476** as they are displaced toward the exit port **690** (see, e.g., FIG. **95**) of the stopper magazine **466**. The trough portion **672** may be flanked on each side by a ledge **676** upon which the step region **512** of the stoppers **476** may rest. In the example embodiment, the stopper magazine **466** may also include two plates **674** which may attach to the magazine body **670** on opposite sides of the trough **672**. The plates **674** may partially overhang the trough **672**. The overhanging portion of these plates **674** may ensure that stoppers **476** do not fall out of the stopper magazine **466** during shipment or as the stopper magazine **466** is handled. Additionally, the exit port **690** may be at least partially surrounded by a guide wall **678**. The guide wall **678** may be positioned in front of the exit port **690** so as to prevent stoppers **476** from advancing beyond the exit port **690**. The guide wall **644** may also have a guide face **680** with a curvature which helps to position the head portion of the stoppers **476** in alignment with the exit port **690**.

Referring now also to FIGS. **95** and **96**, the stopper magazine **466** may also include a follower assembly **682**. The follower assembly **682** may include a follower block **684** which includes a follower **686**. The follower **686** may include a stopper contacting face which has an arcuate shape that cradles the head or larger diameter portion of the stoppers **476**. A bias member **688** may also be included in the follower assembly **682**. In the example embodiment, the bias member **688** is shown as a constant force spring which is mounted to a mounting block **692** attached to the follower block **684**. As shown best in FIG. **94**, the magazine body **670** may include a routing channel **694** which allows an end of the constant force spring to be feed through the magazine body **670** to a mounting point on an external face of the guide wall **678**. As shown in FIG. **95**, for example, the end of the constant force spring may be coupled to the external face of the guide wall via a fastener **696**. When a stopper **476** is dispensed out the exit port **690** of the magazine body **670**, the bias member **688** may exert a force on the follower block **684** that displaces the follower block **684**, follower **686**, and any remaining stoppers **476** in the stopper magazine **466** toward the exit port **690**. This may advance the next stopper **476** into alignment with the exit port **690**. The follower assembly **682** in the example embodiment also includes two guide rails **698**. The guide rails **698** may extend parallel to one another on opposing sides of the trough portion **672**. These guide rails **698** may extend through the follower block **684** and guide displacement of the follower block **684** as stoppers **476** are dispensed from the stopper magazine **466**. As in other stopper magazine **466** embodiments, mating pins **492** may be included to aid in mounting and detection of the stopper magazine **466** in the magazine receptacle **473**.

Referring now to FIGS. **97-99**, yet another exemplary stopper magazine **466** is depicted. As shown, the stopper magazine **466** is similar to that shown in FIG. **74**A, however, the stopper magazine **466** includes a slot **700** which extends through the bottom of each of the stopper troughs **510**. These slots **700** may allow the stopper magazine **466** to be loaded with a speed loader **702**. The speed loader **702** may include a plate **704** having stopper rack **706** which may hold a number of stoppers **476**. The stopper rack **706** may define the spacing of the stoppers **476** on the speed loader **702**. In the example embodiment, when stoppers **476** are placed into the stopper rack **706**, the stoppers **476** may be arranged in a staggered double column type configuration appropriate for the stopper magazine **466**. The speed loader **702** may be provided clean and sterile within an over pack. A user may maintain a stock of speed loaders **702** within the antechamber of the system **10** and the stopper magazine **466** may remain in place or may be integrated into the sealing station **358**. As needed, speed loaders **702** may be opened and used to refill the stopper magazine **466** during bag **26** sealing operations.

Referring now primarily to FIGS. **98** and **99**, to load stoppers **476** into the stopper magazine **466**, the speed loader **702** may be positioned in alignment with an opening in the stopper magazine **466** and introduced into the stopper magazine **466**. As in FIG. **74**A, the magazine may include divider wall **488** which may separate and partially define each trough **510**. The stopper magazine **466** may also include ridges **490** which flank each trough **510**. The divider wall **488** and the ridges **490** may be at an even height with one another. The height may be selected such that a step region **512** on the stopper **476** where the stopper **476** may catch on the top face of the ridges **490** and dividing wall **488** so as to allow each stopper **476** to hang in its respective stopper trough **510**. The plate **704** of the speed loader **702** may include a slit **708** which may allow the dividing wall **488** to pass through the plate **704** as the speed loader **702** is lowered. As the plate **704** is lowered, the top face of the ridges **490** and dividing wall **488** may begin to support the stoppers **476**. At this point, the plate **704** may displace relative to the stoppers **476**. The plate **704** may continue to be lowered until the stopper rack **706** portion of the plate **704** passes through the slots **700** in the stopper troughs **510** and the stoppers **476** are completely separated from the rack **706**. The plate **704** may then be discarded and a follower assembly (e.g. follower assembly **470** of FIG. **72**) may be displaced into contact with the stoppers **476** so as to allow stoppers **476** in the stopper magazine **466** to automatically advance as they are dispensed from the stopper magazine **466**.

Referring now to FIG. **100**, an exemplary quarantine repository **362** is depicted. As shown, a quarantine repository **362** may include a number of racks **518**. In the example embodiment two racks **518** are shown. In other embodiments a greater number of racks **518** or only a single rack **518** may be included. Each rack **518** may include a number of holders **520** which may support a filled and sealed bag **26**. Only one bag **26** is depicted in place on a holder **520** in FIG. **100**. In the example embodiment, 17 holders **520** are included on each rack **518**. Other embodiments may include less holders **520** on each rack **520** or may include a greater number of holders on each rack **520**.

FIG. **101** depicts an example holder **520**. The holder **520** may include a set of arms **522**. Each of the arms **522** may substantially be a mirror image of the other. As shown, the arms **522** each include a ledge **524** which is recessed with respect to the top face **526** of that arm **522**. As shown, each of the ledges **524** also includes a set of depressions **528**. The depressions **528** may be spaced from one another a distance equivalent to the spacing of the ports **392** of the bags **26**. Each arm **522** also includes a ramped face **530** at the terminus of the arm **522** most distal to the mounting portion of the arm **522** to the rack **518**. The ramped faces **530** may act as a guide which helps direct the bag **26** into a small gap which may be present between each of the arms **522**. The robotic arm **360** may advance a bag **26** to each of the holders

520. As the bag 26 is displaced into the holder 520, the two arms 522 may resiliently splay apart to aid in accepting the bag 26. The bag 26 may be guided into the holder 520 such that the ports 392 rest in the depressions 528 in each arm 522. As the ports 392 have a diameter which is larger than the gap between the arms 522, the bag 26 may be unable to slip through the holder 520. Thus, the two arms 522 may form a cradle for the bag 26. As shown, edges of the ledges 524 and depressions 528 may be rounded so as to prevent contact of the bag 26 with any sharp faces.

Referring now to FIG. 102, the quarantine repository 362 may be completely filled with bags 26 in certain embodiments. In other embodiments, the quarantine repository 362 may be stocked with bags 26 in a manner which depends on the type of bags 26 being used. For example, when bags 26 filled to greater than some predetermined volume are being generated, the control system 15 may command the robotic arm 360 to place bags 26 at every other holder 520. This may mitigate the potential for the quarantine repository to become overcrowded and make hanging of additional bags 26 problematic. Where bags 26 filled to a lesser volume than the predetermined volume are being generated, every holder 520 may be populated with a filled bag 26.

Referring now also to FIGS. 103 and 104, the bags 26 may remain in the quarantine repository 362 while one or more test is completed. In certain embodiments, a test which monitors for pyrogens may be conducted prior to release of the bags 26 from the quarantine repository 362. For example, the control system 15 may generate a notification on its user interface that a test is due. A user may place a vial 532 in a sampling fixture 534 which may then be passed into the second section 98 of the enclosure 12 via a vial access door 380. The vial 532 may be treated in a depyrogenation oven prior to use and may be provided in an over pack 60 which is only to be opened within the antechamber of the enclosure 12. The sampling fixture 534 may include a cupped portion 536 within which the vial 532 may be placed. To introduce the vial 532 into the second section 98 of the enclosure 12, the vial access door 380 may be opened such that the user may access a receptacle 542 attached to the side of the vial access door 380 which faces the second section 98 of the enclosure 12. The sampling fixture 534 may be docked into the receptacle 542 and the vial access door 380 may again be closed.

The sampling fixture 534 may have an offshoot 538 which includes an enlarged segment 540. The enlarged segment 540 may be shaped so as to mimic the dimensions of a port 392 of a bag 26. This may allow the grasper 418 on a robotic arm 360 to collect the sampling fixture 534 and displace it around the second section 98 of the enclosure 12. The robotic arm 360 may displace the sampling fixture 534 and vial 532 to the filling station 356 and the control system 15 may command an aliquot of fluid to be dispensed into the vial 532. The robotic arm 360 may then return the sampling fixture 534 and vial 532 to the receptacle 542 of the vial access door 380. The vial access door 380 may again be opened by the user and the vial 532 may be removed and installed in a pyrogen testing apparatus such as an endotoxin monitor.

Typically, the bags 26 may be held in the quarantine repository 362 until at least a first and second pyrogen test are completed and indicate a pyrogen content below a predefined amount (e.g. some predefined EU/mL threshold). The first pyrogen test may be a pyrogen test on a fluid sample collected before any bags 26 currently in the quarantine repository 362 had been filled. The second test may be a pyrogen test on a sample of fluid collected after all of the bags 26 in the quarantine repository 362 have been filled. In some embodiments, this second test may double as the first test for a next grouping of bags 26 to be filled by the system 10. In some embodiments, additional pyrogen testing may be conducted.

In alternative embodiments, a pyrogen test may be made after each rack 518 of the quarantine repository 362 is filled to capacity. This may be desirable as the pyrogen test may take some time (e.g. ~15 minutes) to complete. This may allow the system 10 to continue filling bags 26 as pyrogen testing is completed. One rack 518 may be tested while a second rack 518 is filled. By the time the second rack 518 is filled with bags 26, the pyrogen testing for the first rack 518 may have completed and the bags 26 may be ready for labeling and dispensing from the system 10. This may help to increase efficiency of the system 10 as there may not be a down time while the pyrogen test is completed where filling of bags 26 must be halted in order to free up space in the quarantine repository 362.

Referring now to FIGS. 105-107, before bags 26 are dispensed from the system 10, the bags 26 may be labeled. FIG. 105 depicts an example labeler 366. The labeler 366 may generate labels which may be adhered to each bag 26 by via adhesive. The labeler 366 may be a thermal transfer ribbon type labeler in certain embodiments. As shown, the labeler 366 may include a housing 550 which may enclose a supply of blank labels and the various printing components of the labeler 366. The labeler 366 may also include one or more roller 552. The robotic arm 360 (only the gripper 418 of the robotic arm 360 is shown in FIG. 105 for ease of illustration) may displace a bag 26 to the labeler 366 once, for example, a lot of bags 26 in the quarantine repository 362 have passed testing. The bag 26 may be pulled across a plate 554 including a feed slot through which a label 556 extends. The label 556 may adhere to the surface of the bag 26 and the bag 26 may be pulled across the rollers 552. The weight of the bag 26 and its contents may help to couple the label 556 securely to the bag 26 as the bag 26 displaces over the rollers 552.

A label sensor 557 (see FIG. 56) may be included to monitor for the presence of a label 556. The control system 15 may receive an output signal from the label sensor 557 and analyze the signal to determine whether a label 556 was applied to the bag 26. Additionally, the control system 15 may analyze the signal to ensure that a label 556 is present before displacing the bag 26 to the labeler 336 for application a label 556. Thus the control system 15 may analyze the label sensor 557 to determine whether a label supply in the labeler 366 is empty or an error state is present. The control system 15 may generate a label supply empty notification or labelling error based on data received from the label sensor 557

Once labeled, and referring now to FIGS. 108-110, the robotic arm 360 may displace the bag 26 to an outlet of the enclosure 12. In the example shown in FIGS. 108-110 the outlet is shown as a chute 560. The chute 560 may include a top opening which is cover by a door flap 562. Additionally, the chute 560 may include funneling arms 564 which may help direct bags 26 into the chute 560 as they are dropped by the grasper 418 of the robotic arm 360. When bags 26 are dropped into the chute 560, the door flap 562 may be rotated out of the way by the weight of the bag 26. A bias member such as a torsion spring may be included to return the door flap 562 to a closed orientation. As best shown in FIGS. 109 and 110, the door flap 562 may be attached to a sensing projection. As the door flap 562 is displaced, the sensing projection 566 may displace so as to

allow a door sensor **568** to pick up the movement of the door. Any suitable sensor may be used. For example, the door sensor **568** may be an optical sensor such as a beam interrupt sensor or reflection based sensor. The door sensor **568** may alternatively be a magnetic based sensor such as a hall effect sensor. The door flap **562** may include a magnet in such embodiments. A micro switch or button which is mechanically actuated by displacement of the sensing projection **566** as the door flap **562** is displaced may also be used in certain examples. An encoder may monitor displacement of the pivot pin on which the door flap **562** is mounted. Other types of sensing arrangements are also possible. As the bag **26** travels along the chute **560**, the bag **26** may push open an exit flap **570** as it is delivered out of the enclosure **12**. The exit flap **570** may be a rigid hinged door or may be a flexible piece of material as depicted in FIG. **110**.

The control system **15** of the system **10** may monitor the door sensor **568** to ensure that the system **10** is operating as expected. For example, when the control system **15** commands the robotic arm **360** to release a bag **26** into the chute **560**, the control system **15** may check to ensure that the door sensor **568** registers that the door flap **562** has opened. The control system **15** may also check to ensure that the door sensor **568** indicates that the door flap **562** has returned to a closed state. In the event that the door sensor **568** does not indicate that the door flap **562** has opened when a bag **26** is released, the control system **15** may generate a notification or alert on a user interface of the system **10**. The control system **15** may also generate a notification in the event that the door flap **562** does not close. The notification may indicate to the user to check that there are no items blocking the exit flap **570** and causing bags **26** to back up in the chute **560** for example.

In the event that a bag **26** is deemed to be unacceptable, the bag **26** may be dispensed from the enclosure **12** without a label **556**. For example, where the bag **26** is in the quarantine repository **362**, the bag **26** may be retrieved from the quarantine repository **362** and dispensed unlabeled **556**. During filling of the bag **26** at the filling station **356**, when composition sensors indicate that the fluid filled into the bag **26** does not conform to a predefined target composition range, the bag **26** may be sealed and dispensed from the enclosure **12** outlet. No label **556** may be applied. In alternative embodiments, a label **556** may be generated from the bag **26** which conspicuously indicates that the bag **26** is not to be used. For example, a label **556** reading "NOT FOR HUMAN USE" or the like may be generated and applied to the bag **26** before dispensing.

Referring now to FIG. **111**, a top down view of another example system **10** for producing and packaging medical fluids is shown. The system **10** may include a medical water production device **14** such as any of those described herein. The system **10** may also include a mixing circuit **348** and a sensor suite **350** which may monitor the quality of purified water produced by the medical water production device **14** as well as mixed fluid generated in the mixing circuit **348**. The sensor suite **350** may include any number of different types of water quality sensors. Any water quality sensors described herein may be included. The mixing circuit **348** and sensor suite **350** may be the example mixing circuit **348** and sensor suite **350** described in relation to FIG. **204** or FIG. **205**.

The system **10** also includes an enclosure **12**. The enclosure **12** may provide a clean room environment for the components of the system **10** contained therein. The enclosure **12** itself may also be contained within a clean room environment. In such embodiments, the enclosure **12** may be maintained at a higher clean room standard than the room in which it is located. In some embodiments, the enclosure **12** may be held at positive pressure by a blower system (not shown in FIG. **111**, see, e.g., item **600** of FIG. **177**). Various filters such as HEPA filters may be included to help ensure any air blown into the enclosure **12** to maintain positive pressure is clean.

The enclosure **12** may include an antechamber **1600**. The antechamber **1600** may be constructed as a glove box and include at least one pair of glove interfaces **352**. The glove interfaces **352** may provide a sterility barrier through which a user may manipulate various components of the system **10** within the enclosure **12**. The antechamber **1600** may be utilized for preparing various consumables used by the system **10** and collecting and handling waste or spent consumables. Holders **1604** or various racks, shelving, hangers, compartments, and the like may be included in an antechamber **1600** to aid in organizing component stocks or retain waste produced by the system **10**. Sampling ports in the fluid circuit may be accessible via the antechamber **1600** in certain examples.

An antechamber **1600** may include a transfer port **1606**. The transfer port **1606** may be mounted in a side wall of a portion of the enclosure **12** which forms the antechamber **1600**. The transfer port **1606** may be a sterile rapid transfer port which may allow for components to be provided into the enclosure **12** and removed from the enclosure **12** while maintaining environmental control of the enclosure **12**. In certain examples, the rapid transfer port may be an alpha port which may interface with any of a variety of beta containers **1608** (rigid vessels, flexible bags, partially flexible containers). These containers may be pre-filled with consumables and sterilized. After connection to the alpha port, consumables may be removed from the beta containers **1608**. The beta containers **1608** may then be filled with waste to allow for waste to be transferred out of the enclosure **12**. Empty sterile beta containers **1608** may also be connected to an alpha port as needed to allow for removal of waste. A rapid transfer port may be used in other embodiments of systems **10** for producing and packaging medical fluids such as those described in relation to FIG. **56** or FIG. **177**.

The enclosure **12** may also include a packaging section **1602**. A packaging section **1602** may include a bag dispensing assembly **1610**, a port opening station **1612**, filling station **1614**, sealing station **1616**, and a labeling station **1618**. Clips **1700** filled with bags **26** may be loaded into the bag dispensing assembly **1610** by a user via the gloved interfaces **352**. Alternatively, as in other embodiments described herein, fill receiving sets **24** may be used in certain examples. In certain embodiments, and as shown in FIG. **111**, a plurality of bag feeders **1622** may be included in the bag dispensing assembly **1610**, though any embodiment described herein may alternatively be outfitted with only a single bag feeder **1622**. Multiple bag feeders **1622** may allow for more bags **26** to be held in a bag dispensing assembly **1610**. In some embodiments, each bag feeder **1622** may be stocked with different bag **26** types or bags **26** having different fill capacities. A robotic arm **360** including at least one grasper **1624** may collect a bag **26** from a clip **1620** of the bag dispensing assembly **1610** and displace the bag **26** to the port opening station **1612**. The robotic arm **360** may, for example, be a 5 or 6 axis robotic arm though any suitable number of axes may be used. The bag **26** may be provided empty with each port of the bag **26** in a sealed state.

One of the ports of the bag **26** may be cut open at the port opening station **1612** to provide a flow path into the interior volume of the bag **26**.

Once opened, the bag **26** may then be moved to the filling station **1614** by the robotic arm **360**. Fluid may be dispensed into the bag **26** at the filling station **1614**. This fluid may be purified water such as WFI water, or a mixture of fluid generated at a mixing subsystem similar to those described in relation to FIGS. **2A-2B** or FIG. **204** and FIG. **205**. Bags **26** may also include a concentrate as described above in relation to FIGS. **5A-6** for example. From the filling station **1614**, the robotic arm **360** may displace the filled bag **26** to a sealing station **1616**. An access to the interior volume of the bag **26** may be sealed closed at the sealing station **1616** (e.g. via stoppering, RF welding, thermal welding, etc.). In certain examples and as shown in FIG. **111**, the sealing station **1616** may include a tube sealing assembly **906** such as that shown and described in FIGS. **248-249**. Where such a tube sealing assembly **906** is used, cutter inserts (see, e.g., FIG. **249**) may not be included in the tube sealing assembly **906**.

From the sealing station **1616**, the bag **26** may be displaced to the labeling station **1618**. The labeling station **1618** may print a label directly on the bag **26** or on a medium which may be adhered or otherwise affixed to the bag **26**. The label may include information required by any relevant statues or regulations as well as identifying characteristics, tracking information (e.g. lot number), computer readable indicia, corresponding patient information, instructions for use, logos, etc. Bags **26** may then be expelled from the enclosure **12** through an output assembly **1626**. The output assembly **1626** may include a slide or chute (see, e.g., FIG. **110**) which may direct bags **26** out of the enclosure **12**. In some embodiments, a conveyer may be included and may receive bags **26** dispensed by the output assembly **1626**.

In some examples, the packaging section **1602** of the enclosure **12** may also include one or more bag retainer **1628**. As fluid is packaged into bags **26**, certain steps of the packaging process may take longer than others. For example, it may take a relatively long period of time to fill a bag **26** at the filling station **1614** particularly if the bag **26** has a large interior volume. Thus, it may be advantageous to fill a first bag **26** while a previously filled bag **26** is progressed through other stations in the packing section **1602**. To optimize throughput, the robotic arm **360** may, for example, temporarily place the previously filled bag **26** in a bag retainer **1628** so that another bag **26** may be collected from the bag dispensing assembly **1610**, opened at the port opening station **1612**, and brought to the filling station **1614**. The robotic arm **360** may then retrieve the previously filled bag **26** from the bag retainer **1628** and displace that bag **26** to at least one other station while the other bag **26** is being filled. Each bag retainer **1628** may be paired with at least one sensor **1629** which may monitor for the presence or absence of a bag **26** in the associated bag retainer **1628**.

In certain embodiments, various sensing on fluid filled into the bags **26** may have a latency period which is in excess of the time required to fill the bag **26**. For example, a TOC monitor **724** on a slip stream may take some time to update and the bag **26** may be completely filled prior to the control system **15** receiving the update. The bag **26** may be held in quarantine on a bag retainer **1628** until data from the sensor is received and the bag **26** is cleared for use. In the event that the data indicates that the bag **26** should be discarded, the bag **26** may be sealed and, for example, conspicuously labeled "NOT FOR HUMAN USE" or the like before being ejected from the enclosure **12**.

Referring now to FIG. **112**, a side view of the enclosure **12** depicted in FIG. **111** is shown. As shown, the side panel of the antechamber **1600** including the gloved interfaces **352** is removed to provide an unobstructed view of the interior of the antechamber **1600**. A number of access openings from the antechamber **1600** to packing section **1602** of the enclosure **12** may be included. These access openings may include a fill station door **1630**, a bag dispensing passage **1632**, a waste chute **1634**, and a cutting cartridge orifice **1636**. The bag feeders **1622** may extend from the antechamber **1600** into the packaging section **1602** though the bag dispensing passage **1632**. A loading end or antechamber end of each of the bag feeders **1622** may be disposed within the antechamber **1600**. Clips **1700** filled with bags **26** (see, e.g. FIG. **111**) may be loaded into the bag feeders **1622** via the glove interfaces **352** (see, e.g., FIG. **111**) and passed into the packaging section **1602** of the enclosure **12** via the bag feeders **1622**.

The fill station door **1630** may be opened to allow access to a fill nozzle **1910** (see, e.g., FIG. **167**) of the system **10**. The fill nozzle **1910** and/or the supply line **1640** attached thereto may be part of a fluid supply set which may be periodically replaced during use. A sterilizing filter **1642** (e.g. 0.2 micron filter) may be disposed on the supply line **1640** in various embodiments and may form part of the fluid supply set. The fluid supply set may be replaced every new lot of bags **26** filled by the system **10** in certain examples. Alternatively, the fluid supply set may be replaced when the lifetime of the sterilizing filter **1642** elapses.

The fluid supply set may provide a fluid communication path between a mixing circuit **348** of the system **10** and the interior of the enclosure **12**. The fill station door **1630** may include clean room appropriate hinges **382**. In certain embodiments, hinges **382** may be detent hinges which tend to hold the attached door **1630** in a prescribed position and resist inadvertent displacement therefrom. Such hinges may also assist the attached door **1630** in reaching the prescribed position once the door **1630** has been rotated to within a range of the prescribed position. For example, detent hinges which tend to hold the attached door **1630** closed may be used. The fill station door **1630** may also include a port **1638**. The port **1638** may allow a supply line **1640** to be passed from the antechamber **1600** into the packaging section **1602** so that fluid may be provided to the fill nozzle **1910**.

A fill station door sensor **1631** may also be included and may monitor the position of the door **1630**. The door sensor **1631** may be any suitable type of sensor such as a magnetic sensor (the door **1630** may include a metal body), inductive sensor, microswitch, etc. The control system **15** may prevent operation of the robotic arm **360** in the event that the door **1630** is registered as open by the door sensor **1631**. This may ensure that a user's hand is not extended through the door **1630** and in the potential path of a portion of the robotic arm **360**. Additionally, the control system **15** may inhibit use of at least the fill station **1614**. This may ensure that the door **1630** is always in a closed state when bags **26** are filled which may in turn ensure that the filling nozzle **1910** (see, e.g., FIG. **167**) is in an expected position within the enclosure **12**.

The waste chute **1634** may allow for waste generated in the packaging section **1602** to be quickly passed from the packaging section **1602** to the antechamber **1600**. The robotic arm **360** (see, e.g., FIG. **111**) may, for example, drop emptied clips **1700** (see, e.g., FIG. **111**) into the waste chute **1634** after removing them from a bag feeder **1622**. Additionally, pieces of bag **26** ports **1654** cut at the cutting station

1612 (see, e.g., FIG. **111**) may fall into the waste chute **1634** such that they are directed into the antechamber **1600**. A waste holder **1604** is shown in position under the waste chute **1634** in FIG. **112** to collect articles falling from the waste chute **1634**.

The cutting station **1612** (see, e.g., FIG. **111**) may accept a cutting cartridge **1800** (see, e.g., FIG. **159**) which may be periodically replaced during use of the system **10**. As bag **26** ports are cut at the cutting station **1612**, the cutting element in the cutting cartridge may eventually dull. The cutting cartridge orifice **1636** may allow for cutting cartridges to be installed and removed from the cutting station **1612**.

Referring now to FIGS. **113-114**, views of an example bag feeder **1622** are shown. FIG. **113** depicts a front view of the example bag feeder **1622** while FIG. **114** depicts a side view of the example bag feeder **1622** with a portion of the bag feeder **1622** cut away. As shown, the example bag feeder **1622** may include a guide tube **1650**. The guide tube **1650** may be provided filled with bags **26**. The filled guide tube **1650** may be inserted into a housing **1655** and replaced when fully depleted of bags **26**.

The guide tube **1650** may include an interior channel **1652**. In bag feeders **1622** including guide tubes **1650**, the interior channel **1652** may extend along at least a portion of the length of the guide tube **1650**. In the example embodiment, the interior channel **1652** extends along the entire length of the guide tube **1650**. Each bag **26** may include a number of ports **1654**. At least one of the ports **1654** may include an enlarged section **1656**. The interior channel **1652** may be sized to accept the enlarged section **1656**. A passage **1658** may extend from an exterior face of the guide tube **1650** to the interior channel **1652**. The passage **1658** may provide a slot though which the portion of the port **1654** connecting the body of the bag **26** to the enlarged portion **1656** of the port **1654** may extend. The passage **1658** may have a width larger than the portion of the port **1654** connecting the bag **26** to the enlarged portion **1656** of the port **1654**, but smaller than the width dimension of the enlarged portion **1656**. Thus, the enlarged portion **1656** may be unable to pass through the passage **1658** and the bag **26** may hang from the guide tube **1650**. The length of the guide tube **1650** and interior channel **1652** may be selected such that the bag feeder **1622** may accommodate a desired number of bags **26**. Though various examples of bag feeders **1622** shown herein may be depicted as having a certain bag **26** capacity, as would be understood by those skilled in the art, these embodiments may be modified to adjust the bag **26** capacity.

Still referring to FIGS. **113-114**, a bag feeder **1622** may also include an advancement assembly **1660**. The advancement assembly **1660** may displace the enlarged portions **1656** of the port **1654** along the interior channel **1652** of the guide tube **1650** to feed bags **26** toward an output of the bag feeder **1622**. As a foremost bag **26** is removed from the bag feeder **1622**, the advancement assembly **1660** may displace the enlarged portions **1656** of the ports **1654** such that the next bag **26** in the bag feeder **1622** is moved to the output of the bag feeder **1622**. The advancement assembly **1660** may include, though is not limited to including, a spring biased follower assembly (see, e.g. feed plate **396** of FIG. **59**) or an electromechanical actuator (see, e.g., FIG. **121**).

Bags **26** may be removed from the output of the bag feeder **1622** in a variety of ways. Referring now also to FIGS. **115-117**, for example, the enlarged portion **1656** of a port **1654** at the output of the bag feeder **1622** may be frictionally retained in the bag feeder **1622**. This may be due to a bias force exerted by an advancement assembly **1660** or via pressure exerted on the enlarged portions **1656** of the ports **1654** via an electromechanical actuator of an advancement assembly **1660**. As shown best in FIG. **117**, an output slot **1662** may be included in the bag feeder **1622**. The output slot **1662** may extend from an exterior face of the guide tube **1650** to the interior channel **1652** and may be disposed at an angle (e.g. substantially perpendicular) with respect to the interior channel **1652**. The housing **1655** may also include an opening in the area of the output slot **1662**. A pulling force sufficient to overcome the friction holding the port **1654** in place at the output slot **1662** may be exerted on a portion of the bag **26** to displace the enlarged portion **1656** of the port **1654** through the slot **1656**. This may free the bag **26** from the bag feeder **1622**. The next bag **26** in the bag feeder **1622** may then be displaced to the output slot **1662** of the bag feeder **1622** via the advancement assembly **1660**.

As shown in FIGS. **115-117**, the bag feeder **1622** may include a housing **1655**. In some embodiments, guide tubes **1650** may be provided pre-loaded with bags **26**. Pre-loaded guide tubes **1650** may be introduced into an enclosure **12** (see, e.g., FIG. **111**) of the system **10** via a rapid transfer port **1606** (see, e.g. FIG. **111**). The pre-loaded guide tubes **1650** may be placed into the housing **1655** and bags **26** may be dispensed from the bag feeder **1622** until the guide tube **1650** is emptied. The empty guide tube **1650** may be removed from the housing **1655** and replaced by a new full guide tube **1650**.

Referring now also to FIGS. **118-121**, in other embodiments, a bag feeder **1622** may include an ejector **1664** disposed at the output of the bag feeder **1622**. The ejector **1664** may have a displacement range from a channel aligned position (see, e.g. FIG. **118** and FIG. **120**) to a presenting position (see, e.g., FIG. **119**). Enlarged portions **1656** of ports **1654** advanced through a guide tube **1650** of a bag feeder **1622** may be displaced into a receptacle **1666** of the ejector **1664**. When in the channel aligned position, the receptacle **1666** may be aligned with and form an extension of the interior channel **1652** of the guide tube **1650** (see FIG. **120**). The receptacle **1666** may include a trough **1668** recessed into a portion of the receptacle **1666**. A section (e.g. bottom edge) of an enlarged portion **1656** of a port **1654** may seat into the trough **1668** so as to loosely retain the enlarged portion **1656** in placed within the receptacle **1666**. The ejector **1664** may then be actuated from the channel aligned position to the presenting position (see FIG. **119**). This may, for example, be done by an electromechanical ejector actuator **1686** (see, e.g., FIG. **121**). The bag **26** may be displaced along with the ejector **1664**. In the presenting position, the entirety of the receptacle **1666** and thus the entirety of the enlarged portion **1656** of the port **1654** may be disposed below the housing **1655**. To remove the bag **26** from the bag feeder **1622**, the enlarged portion **1656** of the port **1654** may be lifted out of the trough **1668** and displaced out of the ejector **1664**. Once removed, the ejector **1664** may be actuated back to the channel aligned position and an advancing assembly **1660** (shown in FIG. **121** as a linear electromechanical actuator) may be powered to drive a next enlarged portion **1656** of a port **1654** into the receptacle **1666**.

In the example embodiment, the ejector **1664** shown in FIGS. **118-121** may be displaced in a direction parallel to the axis of the port **1654**. Typically, this may result in the bag **26** being lowered out of the guide tube **1650**. In other embodiments, the displacement direction of an ejector **1664** may differ. For example, in some embodiments, the ejector **1664** may displace in a direction other than parallel to the axis of

the port **1654**. The direction of ejector **1664** displacement may be informed based on spatial constraints within an enclosure **12**.

Another bag feeder **1622** including an ejector **1664** which displaces along a displacement range running perpendicular to the axis of the port **1654** is shown in FIGS. **122-124**. In FIGS. **122-124**, enlarged portions **1656** of ports **1654** (bag **26** and remainder of port **1654** not shown in FIGS. **122-124**) may displace along an interior channel **1652** of a guide tube **1650** as described above. Upon reaching the ejector **1664**, the enlarged portion **1656** of a port **1654** may enter a receptacle **1666** in the ejector **1664**. Though shown as part of the guide tube **1650**, in alternative embodiments, the ejector **1664** may be included as part of a housing **1655** within which a guide tube **1650** may be installed.

The receptacle **1666** may include first and second shelf members **1670**A, B. When an enlarged portion **1656** enters the receptacle **1666** it may be disposed at least partially in between each of the shelf members **1670**A, B. The ejector **1664** may then be actuated from a channel aligned position (see, e.g., FIG. **122**) to a presenting position (see, e.g. FIG. **123**). In the example embodiment, the ejector **1664** includes a ram element **1672** and a boom **1674** to which the receptacle **1666** is attached. The ram element **1672** may displace through a slide bearing **1684** of the boom **1674** via an actuator **1686**. In a first stage of actuation, the ram element **1672** may be displaced into contact with the enlarged portion **1656** of the port **1654** disposed between the shelf members **1670**A, B. In a second stage, the ram element **1672** may be further actuated and the boom **1674** may be displaced along with the enlarged portion **1656** of the port **1654** until the ejector **1664** has reached the presenting position (see FIG. **123**). In the presenting position, the entirety of the receptacle **1666** and the enlarged portion **1656** of the port **1654** may be disposed external to the guide tube **1650**.

In the example embodiment, the ram element **1672** includes a head **1676** which may mate with and capture a region of the enlarged portion **1656** of a port **1654**. In the example embodiment, the enlarged portion **1656** includes two opposing end panels **1680** A, B which overhang a wedge shaped wall **1678** disposed between the two end panels **1680**A, B. The head **1676** of the ram element **1672** includes a notch **1682** in the shape of the Latin character "V". The wedge shaped wall **1678** may seat into the notch **1682** as the ram element **1672** is actuated and the end panels **1680**A, B may prevent movement of the enlarged portion **1656** of the port **1654** along the axis of the port **1654**. Other male and female mating geometries for the enlarged portion **1656** of the port **1654** and the head **1676** of the ram element **1676** may respectively be used in alternatively examples.

Once the ejector **1664** is in the presenting position, the bag **26** may be grasped (e.g. by a robotic grasper) and the ram element **1672** may be displaced in a reverse direction (see, e.g. FIG. **124**). This may free the enlarged portion **1656** of the port **1654** from the head **1676** of the ram element **1672** and allow the bag **26** to be removed from the bag feeder **1622**. Displacement of the ejector **1664** back to the channel aligned position may be a two stage process. In a first stage, the ram element **1672** may be further retracted until a wall **1688** of the ram element **1672** abuts against the slide bearing **1684** of the boom **1674**. In the second stage, the ram element **1672** may continue to be retracted and the wall **1688** may push against the slide bearing **1684** to drive the boom **1674** in tandem with the ram element **1672**. Retraction of the ram element **1672** may halt when the ejector **1664** has been returned to the channel aligned position.

Still another embodiment of a bag feeder **1622** is shown in FIGS. **125-127**. As with other exemplary bag feeders **1622** described above, the bag feeder **1622** may include a guide tube **1650**. In the example shown in FIGS. **125-127**, the guide tube **1650** may be disposed within a housing **1655** which surrounds at least a portion of the guide tube **1650**. The guide tube **1650** may include an interior channel **1652** through which enlarged portions **1656** of ports **1654** may be advanced by an advancement assembly **1660** (see, e.g., FIG. **121**). The guide tube **1650** may include two cantilevered retention projections **1694** which may extend into the interior channel **1652** from the wall of the guide tube **1650**. The cantilevered projections **1694** in the example embodiment are disposed in opposition to one another and extend toward one another from the wall of the guide tube **1650**. The cantilevered projections **1694** may obstruct passage of enlarged portions **1656** of ports **1654** when the enlarged portions **1656** are advanced within the interior channel **1652** to the location of the cantilevered projections **1694**. Powering of an advancement assembly **1660** (see, e.g., FIG. **121**) may exert a force on enlarged portions **1656** of ports **1654** within the interior channel **1652**. This force may press the enlarged portion **1656** most proximal to the cantilevered projections **1694** against the cantilevered projections **1694**. When the force reaches a threshold, the cantilevered projections **1694** may deflect to an unobstructing position and/or the enlarged portion **1656** of the port **1654** may deflect around the cantilevered projections **1694**. This may permit passage of the enlarged portion **1656** through the cantilevered projections **1694** and into an output region of the bag feeder **1622**.

The output of the bag feeder **1622** may include a receptacle **1690**. In the example, the receptacle **1690** is defined in the housing **1696** of the bag feeder **1622**. The receptacle **1690** may include a trough **1692** within which a section (e.g. a bottom face) of the enlarged portion **1656** of a port **1654** of a bag **26** may seat. When an enlarged portion **1656** of a port **1654** of a bag **26** is disposed in the receptacle **1690**, the bag **26** may hang from the receptacle **1690**. To collect the bag **26** from the bag feeder **1622**, the bag **26** may be lifted out of the trough **1692** and displaced from the receptacle **1690**. The advancement assembly **1660** may then be powered to drive a next bag **26** through the cantilevered projections **1694** and into the receptacle **1692**.

Referring now to FIGS. **128-129**, in some examples, a bag feeder **1622** may be arranged to accept pre-loaded clips **1700** which are filled with bags **26**. In such examples, the bag feeder **1622** may include at least one guide body **1704**. The at least one guide body **1704** may be an elongate member which may, for example, extend from the antechamber **1600** (see, e.g., FIG. **111**) to the packaging section **1602** (see, e.g., FIG. **112**) of a system **10**. The guide body **1704** may define a track **1706** which may extend along the length of the guide body **1704**. Where more than one guide body **1704** is included, a portion of the track **1706** may be included in each of the guide bodies **1704**. Each clip **1700** may include a rail **1702** which projects from a main body **1708** of the clip **1700** and interfaces with the track **1706**. The rail **1702** may be a dovetail rail or may be a rail having a cross section in the shape of the Latin character "T" in certain examples. The track **1706** may be a dovetail or "T" shaped slot in the guide body **1704**. Any other suitable mating geometries for the rail **1702** and track **1706** may be used in alternative embodiments.

In certain embodiments, the rail **1702** may be provided on a guide body **1704** and the track **1706** may be provided on each clip **1700**. The locations (whether on the clip **1700** or

guide body **1704**) and shape of rails **1702** and tracks **1706** shown in relation to clips **1700** described herein are merely exemplary. Where, for example, a dovetail rail **1702** and track **1706** are shown, a "T" shaped rail **1702** and track **1706** could be used instead (the reverse is also possible). Additionally, where the track **1706** is depicted as a feature the guide body **1702** and the rail **1702** is depicted as a feature the clip **1700**, the track **1706** and rail **1702** could be provided on the clip **1700** and guide body **1704** respectively in alternate embodiments.

Clips **1700** may be provided fully loaded with bags **26** and may be provided in sterile packaging. Pre-loaded clips **1700** may be introduced into an enclosure **12** via rapid transfer port **1606** and loaded onto guide bodies **1704** via glove interfaces **352**. As clips **1700** are loaded into an antechamber **1600** side of a guide body **1704**, clips **1700** already on the guide body **1704** may be pushed toward the packaging side of the guide body **1704**. The clips **1700** may be consumables which are disposed of after being emptied of bags **26**. A robotic grasper **1624** (see, e.g., FIG. **111**) may remove clips **1700** from the packaging side of the guide body **1704** once all bags **26** have been removed from a clip **1700**. Spent clips **1700** may be dropped in a waste chute **1634** (see, e.g., FIG. **111**) to remove them from the packaging section **1602**.

Clips **1700** may hold any suitable number of bags **26**. In the example shown, the clip **1700** is arranged to hold five bags **26**. Other clips **1700** may hold anywhere from 1-100 bags **26**. Certain clip **1700** embodiments may hold 10-15 or 20-25 bags **26**. Though various clips **1700** shown and described herein may be illustrated as holding a certain number of bags **26**, as would be apparent to one skilled in the art, these clips **1700** may be modified to have a larger or smaller bag **26** capacity than illustrated.

To hold bags **26** in place on a clip **1700**, a clip **1700** may include a plurality of retention receptacles **1710**. In the example shown, the retention receptacles **1710** are niches or slots which extend to an edge of clip **1700** and create channel through the main body **1708** of the clip **1700**. Each retention receptacle **1710** may engage with a portion of a bag **26** to retain the bag **26** in place on the clip **1710**. In the example clip **1700**, the retention receptacles **1710** engage with a span of the ports **1654** of each bag **26**. In other embodiments, the retention receptacles **1710** may engage with the enlarged portion **1656** of a port **1654** or the body of the bag **26** itself to hold the bag **26** in place on the clip **1700**. In the example embodiment, the retention receptacles **1710** are defined as slots formed between cantilevered members **1712** of the clip **1700**. Each of the retention receptacles **1710** may include a set of notches **1714** which may be spaced so as to accept ports **1654** of the bags **26**. The number of notches **1714** may be equal to the number of ports **1654** included on a bag **26** intended for use with that clip **1700**. The notches **1714** may be slightly smaller than the ports **1654**. Thus, when bags **26** are installed into each of the retention receptacles **1710**, the ports **1654** may be slightly compressed and frictionally retained within the notches **1714**. In some embodiments, the ports **1654** may include raised nodes **1653**. The raised nodes **1653** may be disposed on at least one side of the main body **1708** of the clip **1700** when a bag **26** is installed in a retention receptacle **1710**. This may aid in ensuring that a bag **26** is not inadvertently removed from the clip **1700**. The nodes **1653** may also aid in locating bags **26** within the retention receptacles **1710**.

As the ports **1654** may be held between two opposing cantilevered members **1712**, the cantilevered members **1712** may resiliently deflect as a bag **26** is pulled out of a retention receptacle **1710**. This may allow each retention receptacle **1710** to temporarily widen to allow for removal of a bag **26**. Likewise, resilient deflection of the cantilevered members **1712** may facilitate installation of the bags **26** into the retention receptacles **1710**. The cantilevered members **1712** may tend to snap back to a less stressed state once the ports **1654** enter into the notches **1714**. Thus, bags **26** may be automatically captured within the retention receptacles **1710** once properly positioned.

Referring now to FIGS. **130-131** an example clip **1700** is shown loaded with bags **26** (FIG. **130**) and empty (FIG. **131**). The example clip **1700** includes a rail **1702**, which in the example embodiments, has a "T" shaped cross-section. The main body **1708** of the clip **1700** includes a number of retention receptacles **1710**. The retention receptacles **1710** are defined between opposing cantilevered members **1712**. Each of the retention receptacles **1710** includes a set of notches **1714** sized to accept ports **1654** of a bags **26**. The example clip **1700** is arranged to hold seven bags **26** though the clip **1700** may be modified to hold any suitable number of bags **26** in alternative embodiments.

Another example clip **1700** including a rail **1702** is depicted in FIGS. **132-133**. As in FIGS. **132-133**, various clip **1700** embodiments may include a main body **1708** which is divided into a plurality of tiers **1716**A, B. In the example embodiment, only two tiers **1716**A, B are shown, however, alternative embodiments may include a greater number of tiers. Each of the tiers **1716**A, B may include a set of retention receptacles **1710** which are defined between opposing cantilevered members **1712**. The retention receptacles **1710** of the first tier **1716**A may include a set of notches **1714** which may accept and compress ports **1654** of bags **26** to frictionally retain bags **26** in place on the clip **1700**. The notches **1714** may also provide a form fit which may hold bags **26** in place on the clip **1700**. The exemplary bags **26** shown in FIGS. **132-133** include three ports **1654**. The retention receptacles **1710** of the first tier **1716**A each include a corresponding set of three notches **1714** which may each capture a portion of one of the ports **1654**.

Depending on the bag **26** used, some ports **1654** of a bag **26** may be longer than others. The example bags **26** shown in FIG. **132** each include one port **1654** having an extended span **1718** that projects a distance beyond the terminal end of the bag's **26** other ports **1654**. Other bag **26** varieties may include multiple ports **1654** with extended spans **1718**. When retained in a clip **1700**, extended spans **1718** (which may be constructed of a flexible tubing) may tend to droop or bend beyond their capture point in the retention receptacle **1710** of the first tier **1716**A. The retention receptacles **1710** of the second tier **1716**B (and any additional tiers) may include at least one support notch **1715** within which a region of an extended span **1718** may be captured (see FIG. **132**). This may allow extended spans **1718** of ports **1654** to be constrained to known positions at multiple points along their length. Thus, the second tier **1716**B (and any additional tiers) may act as a support tier which may prevent extended spans **1718** of ports **1654** disposed above the first tier **1716**A from bending or flopping about during use. This may aid in ensuring that ports **1654** do not bend into approach or egress pathways of a robotic arm **360** (see, e.g., FIG. **111**) or gantry as bags **26** are collected from a clip **1700**. It may also help to ensure that ports **1654** of different bags **26** do not become entangled when in place on a clip **1700**.

Referring now to FIGS. **134-136**, yet another embodiment of a clip **1700** is depicted. The clip **1700** is shown loaded with bags **26** in FIG. **134** and empty in FIGS. **135-136**. As shown, the clip **1700** may include a main body **1708**. A rail **1702** may project from the main body **1708**. In the example

embodiment, the rail **1702** is depicted as a dovetail rail. Retention receptacles **1710** may be included on opposing sides of the main body **1708**. In alternative embodiments, only one side of the main body **1708** may include retention receptacles **1710**. Each of the retention receptacles **1710** may be defined between sets cantilevered members **1712**. As shown, the retention receptacles **1710** may each accept and may frictionally retain an enlarged portion **1656** of a port **1654** of a bag **26**. The cantilevered members **1712** may resiliently deflect apart as an enlarged portion **1656** is installed into or removed from a retention receptacle **1710**. This may facilitate installation of bags **26** into and removal of the bags **26** from the clip **1700**.

In some examples, the retention receptacles **1710** may also include a shelf **1720**. Shelves **1720** may extend from the main body **1708** into a bottom portion (portion of each retention receptacle **1710** most distal to the rail **1702**) of each of the retention receptacles **1710**. The surface of the enlarged portion **1656** of a port **1654** most proximal to the body of the bag **26** may partially rest upon the shelf **1720** of a retention receptacle **1710** when the bag **26** is retained by the receptacle **1710**.

The retention receptacles **1710** on a first side of the main body **1708** may be offset with respect to the retention receptacles **1710** on the opposing second side of the main body **1708**. In the example embodiment, retention receptacles **1710** on a first side of the clip **1700** may be disposed opposite cantilevered members **1712** of the second side of the clip **1700**. With the offset arrangement of retention receptacles **1710**, a bag **26** retained on a first side of the clip **1700** may be disposed between the bags **26** held by two adjacent retention receptacles **1710** on the opposing side of the clip **1700** (best shown in FIG. **134**). Ports **1654** of bags **26** retained on the first side of the clip **1700** may also be staggered out of alignment with the ports **1654** of bags **26** retained on the second side of the clip **1700**. Since the ports **1654** may be the thickest section of the unfilled bags **26**, staggering ports **1654** of adjacent bags **26** may allow for spacing between adjacent bags **26** retained on the clip **1700** to be minimized. This may increase the number of bags **26** which may be retained on a clip **1700** of a given length.

Referring now to FIGS. **137-139**, another example clip **1700** is depicted. As shown, the example clip **1700** includes a main body **1708** which is in the form of a plate. A "T" shaped rail **1702** extends from a first side of the main body **1708**. A plurality of retention receptacles **1710** extend from an opposing second side of the main body **1708**. Each retention receptacle **1710** may be defined by sets of opposed cantilevered members **1712**. Each set of cantilevered members **1712** may accept and frictionally retain a region of an enlarged section **1656** of a port **1654** therebetween.

The retention receptacles **1710** may include a wide region **1732** and a narrow region **1734**. The wide region **1732** may receive the enlarged section **1656** of a port **1654** when a bag **26** is retained within a retention receptacle **1710**. The narrow region **1734** may be disposed more proximal to the body of the bag **26** (e.g. underneath the enlarged section **1656**) than the enlarged section **1656** when an enlarged section **1656** of a port **1654** is captured in the retention receptacle **1710**. The narrow region **1734** may be narrower than a width of the enlarged portion **1656** of a port **1654** when the cantilevered members **1712** are in an undeflected state. The narrow region **1734** may thus aid in preventing inadvertent removal of a bag **26** from a retention receptacle **1710**. When a pulling force in excess of a threshold is exerted on a bag **26**, the cantilevered members **1712** defining the retention receptacle **1710** may splay apart to allow passage of the enlarged section **1656** of the port **1654** through the narrow region **1734** of the retention receptacle **1710**.

As shown, each of the cantilevered members **1712** may include a first ramp segment **1726** and a second ramp segment **1728** at their unsupported ends. The first ramp segment **1726** and second ramp segment **1728** may slope in opposite directions. The first and second ramp segments **1726**, **1728** of opposing cantilevered members **1712** may cooperate to form the narrow region **1734** of the retention receptacle **1710**. In some examples, a substantially flat raised segment (not shown) may extend between the first and second ramp segments **1726**, **1728** to lengthen the narrow region **1734** of each retention receptacle **1710**. As an enlarged portion **1656** of a port **1654** is introduced into a retention receptacle **1710**, the enlarged portion **1656** may be displaced against the second ramp sections **1728** of the cantilevered members **1712**. The second ramp sections **1728** may help to guide the enlarged portion **1656** into the retention receptacle **1710** and facilitate spreading of each set of cantilevered members **1712** to permit passage of the enlarged section **1656** through the narrow region **1734** of the retention receptacle **1710**. Once an enlarged portion **1656** of a port **1654** is advanced into the wide region **1732** of a retention receptacle **1710**, each set of cantilevered members **1712** may resiliently restore to an undeflected state. The first ramp sections **1726** may similarly aid in facilitating spreading of sets of cantilevered members **1712** as a bag **26** is pulled from a retention receptacle **1710**. In some embodiments, the first ramp sections **1726** may be replaced with a ledge or barb (see, e.g., FIG. **140**). This may increase the amount of pulling force needed to remove a bag **26** from a retention receptacle **1710**.

An alternative embodiment of the clip **1700** of FIGS. **137-139** is shown in FIG. **140**. In FIG. **140**, in addition to the retention receptacles **1710**, a support arm **1722** extends from the second side of the main body **1708**. The support arm **1722** may include a number of locating projections **1724** on the end of the support arm **1722** most distal to the main body **1708**. The locating projections **1724** may extend into and at least partially around the terminal ends of ports **1654** of bags **26** retained on the clip **1700**. The locating projections **1724** may thus constrain the ends of ports **1654** not engaged by the retention receptacle **1710** to a known location. This may prevent ports **1654** from becoming entangled or bending into approach or egress pathways of a robotic grasper **1624** on a robotic arm **360** (see, e.g., FIG. **111**) or gantry. Additional support arms **1722** with locating projections **1724** may, though need not necessarily, be included where bags **26** include additional ports **1654** in order to constrain such ports **1654** to a known location.

Referring now to FIG. **141**, in some examples, a bag feeder **1622** may include a conveyer assembly **1740**. Where a conveyer assembly **1740** is included, the conveyer assembly **1740** may include a belt **1742**. The belt **1742** may be constructed of a flexible material. Displacement of the belt **1742** may be powered by a set of motors **1744** which rotate pulleys **1746** over which the belt **1742** is routed and tensioned. The belt **1742** may be driven via friction or may be positively driven by the pulleys **1746**. The example in FIG. **141** shows a frictional belt **1742** driving arrangement. A positively driven belt **1742** is shown, for example, in relation to FIG. **142**. At least two pulleys **1746** may be included in the conveyer assembly **1740**. Three are shown in the example bag feeder **1622** depicted in FIG. **141**.

A number of docking bodies **1748** may be coupled to the belt **1742**. The docking bodies **1748** may be spaced at even intervals along the belt **1742** though need not necessarily be

in all examples. The docking bodies **1748** may be coupled to the belt **1742** in any suitable manner (e.g. via mechanical fasteners such as screws or rivets). Each of the docking bodies **1748** may include a track **1750** which may interface with a rail **1702** of a clip **1700**. The track **1750** may, for example, be a slot having a dovetail shaped cross section or a cross-section in the shape of the Latin character "T" (shown).

Each of the docking bodies **1748** may also include a detent pin **1752**. The detent pin **1752** may project into the track **1750**. The detent pin **1752** may, for instance, be spring biased to project into the track **1750**. As a clip **1700** is installed into a docking body **1748**, the clip **1700** may be advanced along the track **1750** until the detent pin **1752** reaches a recess **1754** (see, e.g., FIG. **137**) defined on a surface of the clip **1700**. The detent pin **1752** may seat into the recess **1754** and provide resistance to further advancement of the clip **1700** along the track **1750**. This may provide a tactile cue to a user loading the docking body **1748** that the clip **1700** has been correctly installed. In some embodiments, the action of the detent pin **1752** snapping into the recess **1754** may also generate an audible clicking noise which may provide an audible cue to the user. Additionally, the detent pin **1752** may help to constrain the clip **1700** in a known position on the docking body **1748**. To remove a clip **1700** from a docking body **1748** a force sufficient to overcome the engagement of the detent pin **1752** in the recess **1754** may be applied and the clip **1700** may subsequently be slid out of the docking body **1748**.

In the example embodiment shown in FIG. **141**, the clips **1700** depicted are those shown in FIGS. **137-139** although any clip **1700** including a rail **1702** may be used. Though the docking bodies **1748** each include a track **1750** in the example embodiment, in alternative examples, the docking bodies **1748** may include a rail **1702**. In such examples, clips **1700** may include cooperating tracks which may interface with the rails **1702**.

As the belt **1742** is driven, a docking body **1748** and any clip **1700** installed thereon may be displaced along a displacement path. The displacement path may be dictated by the location of pulleys **1746** of the conveyer assembly **1740**. A portion of the displacement path may be disposed in the packaging section **1602** (see, e.g., FIG. **111**) of the enclosure **12** (see, e.g., FIG. **111**). A portion of the displacement path may also be disposed within the antechamber **1600** section (see, e.g., FIG. **111**) of the enclosure **12** (see, e.g., FIG. **111**). Thus, docking bodies **1748** may transit into the antechamber **1600** to be loaded with filled clips **1700** as the belt **1742** is driven. After being loaded with filled clips **1700**, the belt **1742** may be driven to advance the docking bodies **1748** into the packaging section **1602** so as to present the bags **26** on the clips **1700** for collection by a robotic grasper **1624** of a robotic arm **360** (see, e.g., FIG. **111**) or gantry of the system **10**. Docking bodies **1748** may be returned to the antechamber **1600** so that spent clips **1700** may be removed from the docking bodies **1748**.

Another example of a bag feeder **1622** including a conveyer assembly **1740** is depicted in FIG. **142**. As shown in FIG. **142**, the conveyer assembly **1740** may include a belt **1742** which is teethed. The belt **1742** may be routed around a number of pulleys **1746**. At least one of the pulleys **1746** may be teethed. In the example, a toothed pulley **1746** is coupled to an output shaft **1756** of a drive motor **1744** of the conveyer assembly **1740**. Such a positive drive conveyer assembly **1740** may be desirable as it may facilitate indexing of clips **1700** to desired locations as the belt **1742** is driven.

Referring now also to FIG. **143**, another embodiment of a clip **1700** is depicted. The clip **1700** may include a main body **1708** which is divided into a plurality of tiers **1716**A, B. The first tier **1716**A includes a set of retention receptacles **1710** which are defined between opposing cantilevered members **1712**. The retention receptacles **1710** of the first tier **1716**A may each include a set of notches **1714** which may accept and compress ports **1654** of bags **26** to frictionally retain bags **26** in place on the clip **1700**. The notches **1714** may also provide a form fit which may hold bags **26** in place on the clip **1700**. The retention receptacles **1710** of the first tier **1716**A each include a set of three notches **1714** which may each capture a portion of one port **1654** of a bag **26**. The notches **1714** of each retention receptacle **1710** are staggered out of line with respect to the notches **1714** of adjacent retention receptacles **1710**. As mentioned above, this may allow for a greater number of bags **26** to be retained on the clip **1700**.

The second tier **1716**B may include a number of cradles **1760**. A region of an extended span **1718** (see, e.g., FIG. **132**) of a port **1654** may be captured in each cradle **1760**. This may allow extended spans **1718** of ports **1654** to be constrained to known positions at a desired point along their length. Thus, the second tier **1716**B may act as a support tier which may prevent extended spans **1718** of ports **1654** disposed above the first tier **1716**A from bending or flopping about during use.

Still referring to FIGS. **142-143**, the example clip **1700** also includes a rail **1702**. The rail **1702** may interface with a track **1706** defined by at least one guide body **1704** of the bag feeder **1622**. In the example embodiment, the bag feeder **1622** includes two guide bodies **1704**. Each of the guide bodies **1704** includes a recess which defines a portion of the track **1706**. The guide bodies **1704** may extend along and flank each side of the belt **1742** of the conveyer assembly **1740** along a portion of the conveyer assembly **1740**. The teeth of the belt **1742** may displace along a path between the two guide bodies **1704** as the belt **1742** is driven.

As shown, the clip **1700** may include at least one toothed projection **1762**. When the rail **1702** of the clip **1700** is installed into the track **1706** formed by the guide bodies **1704**, the toothed projection **1762** of the clip **1700** may project into a space between the guide bodies **1704**. The teeth of the belt **1742** may engage with the toothed projection **1762** of the clip **1700** and as the belt **1742** is driven and may displace the clip **1706** along the track **1706**.

Yet another clip **1700** embodiment is depicted in FIGS. **144-146**. As shown, the clip **1700** may include a main body **1708** including a number of retention receptacles **1710**. The retention receptacles **1710** may be formed as slots which may extend through the main body **1708** of the clip **1700**. Each of the retention receptacles **1710** may include at least one well **1764** which is recessed into, but does not extend through the main body **1708**. The wells **1764** may each be sized to accept a port **1654** of a bag **26**. Additionally, the end of the ports **1654** proximal the body of the bag **26** may rest on the bottom surface of the wells **1764**. In other embodiments, the retention receptacles **1710** may include port **1654** retaining notches **1714** which extend through the main body **1708**. Likewise, where other clips **1700** herein may be shown as having notches **1714**, these notches **1714** may be replaced with wells **1764** in alternative embodiments.

Each of the retention receptacles **1710** may be partially defined by a set of cantilevered arms **1766**A, B. The cantilevered arms **1766**A, B may form portions of opposing sidewalls of each of the retention receptacles **1710**. In the example embodiment, the cantilevered arms **1766**A, B each

extend in opposing directions from a central portion of the retention receptacle **1710**. The cantilevered arms **1766**A, B may resiliently deflect in opposing directions as bags **26** are installed into or removed from the retention receptacles **1710**. Deflection of the cantilevered arms **1766**A, B may allow for the retention receptacles **1710** to temporarily widen such that ports **1654** of the bags **26** may be displaced into or out of the wells **1764** of the retention receptacles **1710**. The cantilevered arms **1766**A, B may each resiliently restore to an undeflected state when the ports **1654** of a bag **26** are properly seated into the wells **1764**. The cantilevered arms **1766**A, B may also automatically restore to an undeflected state when ports **1654** of a bag **26** have been displaced clear of a retention receptacle **1710** during removal of a bag **26** from the clip **1700**.

The clip **1700** embodiment shown in FIGS. **144-146** includes a plurality of toothed projections **1762**. These toothed projections **1762** may engage with teeth of a belt **1742** of a conveyer assembly **1740** (see, e.g., FIG. **142**) when the rail **1702** of the clip **1700** is installed within a track **1706** of a bag feeder **1622**. This may allow the clips **1700** to be advanced and indexed along a track **1706** of a bag feeder **1622** as a belt **1742** of a conveyer assembly **1740** of a bag feeder **1622** is driven.

Referring now to FIGS. **147-148**, another exemplary clip **1700** is depicted. The clip **1700** may be divided into a plurality of tiers **1716**A, B. The first tier **1716**A includes a number of retention receptacles **1710** and may be defined in a main body **1708** of the clip **1700**. The main body **1708** may also include a wall portion **1768** which extends from the first tier **1716**A in the direction of the second tier **1716**B. The wall portion **1768** of the main body **1708** is disposed at an angle perpendicular to the first tier **1716**A in the example embodiment. The second tier **1716**B may be coupled to the wall portion **1768**. The second tier **1716**B and wall portion **1768** may, for example, include a set of complimentary interlocking projections **1770**A, B which may be coupled together via interference fit (though adhesive, ultrasonic welds, fasteners, solvent bonding, etc. may be used in alternative examples). In other embodiments, the clip **1700** may be constructed as a single monolithic component (e.g. injection molded).

The retention receptacles **1710** in the first tier **1716**A may be defined between opposing cantilevered members **1712**. Each of the retention receptacles **1710** may include a set of notches **1714**. The notches **1714** may accept and compress ports **1654** of bags **26** to frictionally retain bags **26** in place on the clip **1700**. The notches **1714** may also provide a form fit which may hold bags **26** in place on the clip **1700**. The notches **1714** of adjacent retention receptacles **1710** may be staggered out of line with respect to one another. As mentioned above, this may allow for a greater number of bags **26** to be retained on the clip **1700**. As with the embodiment described in relation to FIGS. **142-143**, the second tier **1716**B may include a number of cradles **1760**. A region of an extended span **1718** of a port **1654** may be captured in each cradle **1760** and constrained to a known position. Thus, the second tier **1716**B may act as a support tier which may help to hold extended spans **1718** of ports **1654** in place on the clip **1700**.

The example clips **1700** may each include a rail **1702**. As shown, the rail **1702** of the clip **1700** includes a toothed projection **1762**. The rail **1702** may include cantilevered arm **1772** formed by a notch **1774** which may be cut into a portion of the rail **1702**. The toothed projection **1762** may be disposed on an unsupported end of a cantilevered arm **1772**.

Referring now also to FIGS. **149-150**, an example bag feeder **1622** (the same as that shown in FIG. **111**) including a conveyer assembly **1740** is depicted. The example conveyer assembly **1740** includes a motor **1744**, a belt **1742**, and a set of pulleys **1746**. The exemplary bag feeder **1622** shown in FIGS. **149-150** may accept clips **1700** (four shown in FIGS. **149-150**) of the type described in relation to FIGS. **147-148**. The rail **1702** of each clip **1700** may interface with a track **1706** defined by at least one guide body **1704** of the bag feeder **1622**. In the example embodiment, the bag feeder **1622** includes two guide bodies **1704**. Each of the guide bodies **1704** includes a recess which defines a portion of the track **1706**. One of the guide bodies **1704** may be formed as a section of a cover (removed in FIG. **150**) which may house the belt **1742** and pulleys **1746** of the conveyer assembly **1740**. The belt **1742** may extend into a portion of the track **1706**. The belt **1742** may extend into the portion of the track **1706** formed by the guide body **1704** included as part of the cover.

As best shown in FIG. **150**, when a clip **1700** is disposed in the track **1706**, the toothed projection **1762** of the clip **1700** may engage with the teeth of the belt **1742**. As the conveyer motor **1744** is powered, a toothed pulley **1746** of the conveyer assembly **1740** may be rotated and the belt **1742** may be positively driven. As the belt **1742** displaces, the engagement of the teeth of the belt **1742** and the toothed projections **1762** of the clips **1700** may cause the clips **1700** to be advanced along the track **1706**. The cantilevered arm **1772** of each clip **1700** may resiliently deflect upon installation of a clip **1700** into the track **1706**. As the cantilevered arm **1772** attempts to restore to an undeflected state, the cantilevered arm **1772** may act as a bias member which may urge the toothed projection **1762** against the belt **1742**. Thus, the cantilevered arm **1772** may aid in ensuring robust engagement of the toothed projection **1762** with the teeth of the belt **1742**. Other clip **1700** embodiments including toothed projections **1762** may have their toothed projections disposed on cantilevered arms **1772** as well.

The example bag feeder **1622** may also include a stop assembly **1780**. The stop assembly **1780** may be disposed at a packaging end **1784** of the track **1706** which may be located in a packaging compartment **1602** of an enclosure **12**. The stop assembly **1780** may include a displaceable gate member **1782**. The gate member **1782** may be displaced between a blocking position (see FIG. **149**) and an open position (see FIG. **150**). In the open position, the packaging end of the track **1706** may be accessible by a grasper **1624** (see, e.g., FIG. **111**) such that the grasper **1642** may grasp and displace empty clips **1700** out of the track **1706**. In the blocking position, the gate member **1782** may obstruct access to the packaging end of the track **1706**. This may ensure that clips **1700** are not accidentally advanced out of the track **1706**.

A control system **15** may keep an accounting of the number of bags **26** remaining on a clip **1700**. Each clip **1700** may include a predefined number of bags **26** when full or the number of bags **26** on a clip **1700** may be collected from an identification tag **1558** (described in greater detail in relation to FIG. **214**) associated with each clip **1700**. When a clip **1700** at the packaging end of the bag feeder **1622** has been emptied, the gate member **1782** may be displaced via an actuator in certain embodiments. The control system **15** may command powering of the actuator to displace the gate member **1782** from the blocking to the open position after a clip **1700** has been emptied to allow for removal of the clip **1700** via a robotic grasper **1624** (see, e.g., FIG. **111**) for example.

In other embodiments, the gate member **1782** may be displaced via a robotic grasper **1624** of the system **10**. In such examples, when the grasper **1624** is displaced to the bag feeder **1622** along a predefined clip removal path, a portion of the grasper **1624** may contact and displace the gate member **1782** to the open position. A clip **1700** may be grasped and removed by displacing the grasper away from the bag feeder **1622**. In the event that the grasper **1624** is not displaced to the bag feeder **1622** substantially along the predefined clip removal path, the gate member **1782** may remain in the blocking position.

In some examples, the gate member **1782** may be biased to the blocking position by a bias member **1781** included in the stop assembly **1780**. Any suitable bias member **1781** may be used. A constant force spring is depicted in FIG. **149** and FIG. **150**. Alternatively, an extension spring attached to the gate member **1782** and a stationary portion of the stop assembly **1780** may be used. As the gate member **1782** is raised, the extension spring may stretch. As the extension spring restores to a more relaxed state, the gate member **1782** may be urged to the blocking position.

The stop assembly **1780** may also include a gate sensor **1786**. The gate sensor **1786** may monitor the positon of the gate member **1782**. The gate sensor **1786** may be any suitable sensor. For example, the gate sensor **1786** may include ultrasonic sensors, optical sensors, beam interrupt sensors, magnetic sensors (the gate member **1782** may include at least one magnet or metal body), inductive sensors, etc.

Once a clip **1700** has been emptied, the control system **15** may command a robotic grasper **1624** (see, e.g., FIG. **111**) to grasp the empty clip **1700** and remove the clip **1700** form the bag feeder **1622**. The control system **15** may issue this command upon receipt of a data signal from the gate sensor **1786** that the gate member **1782** is in the open position. Additionally, the control system **15** may prevent powering of the motor **1744** when the gate sensor **1786** indicates that the gate member **1782** is in the open position.

The bag feeder **1622** may include a position sensing assembly. The position sensing assembly may have a number of position sensors **1778** which may monitor the location of any clips **1700** installed in the track **1706**. The position sensing assembly may output at least one signal which alters in relationship to the position of clips **1700** along the track **1706**. Additionally, the conveyer motor **1744** may include a motor encoder which may output a data signal indicative of a position of an output shaft of the conveyer motor **1744**. Any suitable position sensors **1778** may be used. For example, the position sensors may be optical sensors, ultrasonic sensors, beam interrupt sensors, magnetic sensors (the clips **1700** would each include at least one magnet), etc. A control system **15** of the system **10** may govern operation of the conveyer motor **1744** based at least in part on data signals received from the position sensors **1778** and/or motor encoder. The control system **15** may analyze data received from the position sensors **1778** and/or motor encoder to index clips **1700** to desired positions on the track **1706**. For example, once an empty clip **1700** has been removed from the packaging end of the track **1706**, the control system **15** may command the motor **1744** to advance clips **1700** along the track **1706** such that the next clip **1700** is indexed to the packaging end of the track **1706**.

Once a bag **26** has been collected by a grasper **1624**, the bag **26** may be displaced to a port opening station **1612** (see, e.g., FIG. **111**). At the port opening station **1612**, a port **1654** of the bag **26** may be aligned with a cutting element. To cut open the port **1654**, the cutting element may be actuated into the port **1654** or may be stationary in other examples. Where the cutting element is actuated, the cutting element may be displaced along a displacement axis via a linear actuator. Alternatively, the cutting element may be rotated about a pivot axis and swung into the port **1654** by a rotary actuator. Where the cutting element is stationary, the port **1654** may be displaced against the cutting element via displacement of the grasper **1624** (see, e.g., FIG. **111**) holding the bag **26**. The cutting element may be included in a replaceable cartridge which may swapped out periodically during use.

Referring now to FIGS. **151-152**, a port opener assembly **1840** is depicted. A port opener assembly **1840** such as that shown in FIGS. **151-152** may be positioned at a port opening station **1612** (see, e.g., FIG. **111**) in an enclosure **12** (see, e.g., FIG. **111**). As shown, a port opener assembly **1840** may include a base **1880**. The base **1880** may accept a cutting cartridge **1800** which may be periodically replaced as the system **10** is used. The cutting cartridge **1800** may include a blade element **1810** and a blade housing **1890**. The blade housing **1890** may include a set of spring arms **1892**. The spring arms **1892** may each include a blade engaging end **1894** which may be enlarged with respect to the remainder of the spring arms **1892**. The blade element **1810** may include a set of notches **1896**. The blade engaging ends **1894** of the spring arms **1892** may lock (e.g. snap fit) into the notches **1896** of the blade element **1810**.

The example port opener assembly **1840** shown in FIGS. **151-152** also includes an actuator **1882**. The actuator **1882** may be powered to generate linear displacement of an output shaft **1884**. The output shaft **1884** may displace within a channel **1886** of the blade housing **1890**. A portion of the blade element **1810** may also be disposed within the channel **1886**. The spring arms **1892** may bias the blade element **1810** into contact with an end of the output shaft **1884**.

Via powering of the actuator **1882**, the blade element **1810** may be displaced between a concealed position (see FIG. **151**) and a deployed position (see, FIG. **152**). When the output shaft **1884** is displaced toward the blade housing **1890**, the blade element **1810** may be driven toward the deployed state and the spring arms **1892** may deflect into a stressed state. As the blade element **1810** is driven toward the deployed position, the blade element **1810** may extend into an aperture **1898** of the blade housing **1890**. Any port **1654** present in the aperture **1898** may be severed by the blade element **1810** as the blade element **1810** reaches the deployed position.

As the output shaft **1884** is retracted, the spring arms **1892** may restore to a less stressed state. As the spring arms **1892** restore, they may drive the blade element **1810** back into the blade housing **1890**. Thus, the blade element **1810** may be returned to the concealed position by the spring arms **1892** as the output shaft **1884** retracts. Additionally, the aperture **1898** may be sized such that the severed portion of the port **1654** may fall through the aperture **1898**. The base **1880** may include a similar opening **1888** in line with the aperture **1898**. As the blade element **1810** is retracted out of the aperture, the severed portion of the port **1654** may, for example, pass through the aperture and into a waste chute **1634** (see, e.g. FIG. **112**). In some embodiments, the aperture **1898** may include a funnel contour to aid in directing the cut portion of the port **1654** through the aperture **1898**.

Referring now to FIGS. **153-156**, another example port opener assembly **1840** and cutting cartridge **1800** are depicted. A port opener assembly **1840** such as that shown in FIGS. **153-154** may be positioned at a port opening station **1612** (see, e.g., FIG. **111**) in an enclosure **12** (see, e.g., FIG. **111**). As shown, a port opener assembly **1840** may

include a holder **2400**. The holder **2400** may accept a cutting cartridge **1800** which may be periodically replaced as the system **10** is used. The holder **2400** may include a slot **2402** within which the cutting cartridge **1800** may be installed. The holder **2400** may be coupled to a rotary actuator which in the example embodiment is depicted as a stepper motor **2404**. The stepper motor **2404** may include an output shaft **2406** to which an arm **2408** may be coupled. The arm **2408** may swing about the axis of the output shaft **2406** as the stepper motor **2404** is powered. The arm **2408** may include a pin **2410**.

The cutting cartridge **1800** may include a blade element **1810** and a blade housing **1890**. The blade housing **1890** may be formed of a first body **2420**A and a second body **2420**B. The first and second body **2420**A, B may be coupled together in any suitable manner. In the example embodiment, the first body **2420**A includes integral pins **2422** which may interference fit, be adhered, solvent bonded, etc. into holes **2424** of the second body **2420**B. The blade housing **1890** may include a number of guide slots **2426**, **2428**. The first guide slot **2428** may extend through the entirety of the blade housing **1890** and may be arcuate. The second guide slot **2426** may be present in the first body **2420**A and may also be arcuate. The blade element **1810** may be captured between the first and second body **2420**A, B and displaceable within the blade housing **1890**.

One of the first and second body **2420**A, B may include at least one spring arm **2412**. The spring arm **2412** may be integrally formed with a portion of the blade housing **1890**. As shown, the spring arm **2412** may include a blade engaging end **2414**. A projection **2416** which may extend through a receiving hole **2418** of the blade element **1810** may be included on the blade engaging end **2414** of the spring arm **2412**. When assembled (see FIG. **155**), the projection **2416** may be partially disposed within the second guide slot **2426**. At least one of the first and second body **2420**A, B may include a pivot body **2430**. A notch **2432** of the blade element **1810** may accept the pivot body **2430**. The blade element **1810** may pivot about the pivot body **2430** from home position against a stop wall **2438** of the blade housing **1890** to a deployed position in which the blade element **1810** extends into an aperture **2434** extending through the blade housing **1890**. The spring arm **2414** may bias the blade element **1810** to the home position. As the blade element **1810** is displaced between the home position and the deployed position, the projection **2416** may displace along the second guide slot **2426**. This may help to constrain motion of the blade element **1810** to a desired swing path.

As the stepper motor **2404** is powered, the arm **2408** may be swung. The pin **2410** of the arm **2408** may traverse along the first guide slot **2428** and may press against a portion of the blade element **1810**. This may cause the blade element **1810** to pivotal displace within the blade housing **1890** about the pivot body **2430** toward the deployed position. Additionally, it may cause the spring arm **2412** to become stressed. As the pin **2410** displaces toward the terminal end of the guide slot **2428**, the blade element **1810** may be advanced into the aperture **2434** causing any port **1654** tubing in the aperture **2434** to be cut. The stepper motor **2404** may then be powered to drive the pin **2410** in the opposing direction. As mentioned above, the spring arm **2412** may urge the blade element **1810** back to the home positon as the pin **2410** is retracted.

As shown, there may be a wall **2436** surrounding the aperture **2434** on at least one of the first and second bodies **2420**A, B. The wall **2436** may prevent a severed end of a port **1654** from falling and resting on a surface of the blade housing **1890**. The wall **2436** may instead direct the severed end of the port **1654** such that the severed end falls through the aperture **2434** and out of the cutting cartridge **1800**. As a severed portion of a port **1654** exits the aperture the severed portion of the port **1654** may, for example, fall into a waste chute **1634** (see, e.g. FIG. **112**).

Referring now to FIGS. **157-159** an exemplary cutting cartridge **1800** with a stationary blade element **1810** is depicted. Cutting cartridges **1800** may be introduced into an enclosure **12** (see, e.g., FIG. **111**) of a system **10** through a rapid transfer port **1606** (see, e.g., FIG. **111**). The cutting cartridge **1800** may be installed into a port opening station **1612** (see, e.g., FIG. **111**) of a system **10** via a gloved interface **352** (see, e.g., FIG. **111**) included in the enclosure **12**. Cutting cartridges **1800** may be replaced periodically as the system **10** is operated. For example, the cutting cartridge **1800** may be replaced after a fixed number of bags **26** have been opened with the cutting cartridge **1800**.

As shown, an example cutting cartridge **1800** may include a cartridge body **1802**. The cartridge body **1802** include a first body portion **1804**A and a second body portion **1804**B. The first and second body portions **1804**A, B may be substantially planar and may be coupled to one another in any suitable manner (e.g. adhesive, welding, solvent bonding, etc.). In the example shown in FIGS. **157-159**, a number of molded pins **1806** may be included in one of the first and second body portions **1804**A, B. The pins **1806** may couple (e.g. interference fit, snap fit, etc.) into apertures of the other of the first and second body portions **1804**A, B. Any suitable type of fastener may be used in alternative embodiments.

A number of pegs **1824**A-C may project off the cartridge body **1802** and may be molded into each of the first and second body portions **1804**A, B or may be installed into a hole in the first and second body portions **1804**A, B. The pegs **1824**A-C may act as guide elements which may aid in installing a cartridge body **1802** into a receiving slot **1854** (see, e.g., FIG. **160**) of a port opener assembly **1840** (see, e.g., FIG. **160**). The pegs **1824**A-C may also aid in retaining the cutting cartridge **1800** within the port opening assembly **1840**. A notch **1827** may be included in a side of the cutting cartridge **1800**. Each of the first and second body portions **1804**A, B may include a depression **1808**. The depression **1808** may provide an ergonomic grasping area at which a user may grasp the cutting cartridge **1800**. A sidewall **1820** adjacent the depressions **1808** may also include a recessed region **1822** which may further facilitate grasping of the cutting cartridge **1800**.

The cartridge body **1802** may also include a slot **1812** which extends from a sidewall **1816** of the cartridge body **1802** and through the entirety of the cartridge body **1802**. The slot **1812** may extend from a sidewall **1816** opposite the sidewall **1820** including the recess **1822**. The slot **1812** may include a tapered region **1814** near the sidewall **1816** over which the width of the slot **1812** increases with proximity to the sidewall **1816**. The slot may also include a wide region **1818** at an end of the slot **1812** opposite the sidewall **1816**. A blade element **1810** may be fixedly retained between the first and second body portions **1804**A, B of the cutting cartridge **1800**. The blade element **1810** may span across the width of the slot **1812** intermediate the tapered region **1814** and the wide region **1818**. The blade element **1810** may be disposed at a diagonal with respect to the slot **1812**.

The cutting cartridge **1800** may be provided with a cover coupled into place on the cartridge body **1802** which blocks access to the blade element **1810**. In the example embodiment, a blade clip **1826** is coupled into place on the cartridge body **1802**. As shown, the clip **1826** may include a first arm

1828A and a second arm 1828B. The arms 1828A, B may have a width equal to or greater than the width of the slot 1812 at the location of the blade element 1810. Thus, the arms 1828A, B may block access to the blade element 1810 when the blade clip 1826 is installed on the cartridge body 1802. The blade clip 1826 may clip into placed around that blade element 1810 to retain the blade clip 1828 in place on the cartridge body 1802.

The arms 1828A, B may be coupled to one another by a bridge 1830 of material. An end of each arm 1828A, B on a first side of the bridge 1830 may be pinched together to cause spreading apart of the opposing ends of the arms 1828A, B. This may allow the clip 1826 to be removed from the cartridge body 1802. As shown, at least one of the ends of the arms 1828A, B proximal the blade element 1810 may include a projection 1832. The projection 1832 may extend from the arm 1828A, B toward the opposing arm 1828A, B a distance greater than a distance from the blade element 1810 to the arm 1828A, B including the projection 1832. The projection(s) 1832 may abut into a portion (e.g. backside) of the blade element 1810 in the event that a pulling force is exerted on the clip 1826. This may help to inhibit inadvertent dislodgement of the clip 1826 from the cutting cartridge 1800. Pinching of the arms 1828A, B may spread the ends of the arms 1828A, B proximate the blade element 1810 an amount sufficient to allow the projections 1832 to clear the blade element 1810.

As a port 1654 of a bag 26 is displaced into the slot 1812, the tapered region 1814 may help to guide the port 1654 into the slot 1812 in the event that the port 1654 is bent or bowed. As the port 1654 is advanced along the slot 1812, the port 1654 may contact the blade element 1810. The blade element 1810 may cause a sealed end of the port 1654 to be cut off as the port 1654 is further advanced into the blade element 1810. The wide region 1818 of the slot 1812 may provide an aperture through which the severed end of the port 1654 may pass. The wide region 1818 may be aligned over a catch which may direct the severed end into a waste chute 1634 (see, e.g., FIG. 112) of the enclosure 12.

Referring now to FIGS. 160-161, an example embodiment of a port opener assembly 1840 is depicted. A port opener assembly 1840 such as that shown in FIGS. 160-161 may be positioned at a port opening station 1612 (see, e.g., FIG. 111) in an enclosure 12 (see, e.g., FIG. 111). The port opener assembly 1840 may accept a cutting cartridge 1800 such as that described in relation to FIGS. 157-159. As shown, the port opener assembly 1840 may include a cartridge housing 1842. The cartridge housing 1842 may be defined by a first body portion 1844 and a second body portion 1846. The first and second body portions 1844, 1846 may be coupled together via one or more fastener (or adhesive, solvent bonding, weld, etc.). One of the first and second body portions 1844, 1846 may include a number of locating projection 1850 which may seat into locating wells 1852 of the other of the first and second body portions 1844, 1846. In some embodiments, each of the locating projections 1850 and locating wells 1852 may include a portion of a threaded bore. When the first and second body portions 1844, 1846 are assembled together, a fastener 1848 may be threaded into these threaded bores to couple the first and second body portions 1844, 1846 to one another. The cartridge body 1842 may include a main portion 1843 and a projecting portion 1845.

At least one of the first and second body portions 1844, 1846 may include a recess 1856. The recess(es) 1856 may form a receiving slot 1854 for a cutting cartridge 1800 when the first and second body portions 1844, 1846 are coupled to one another. The receiving slot 1854 may extend through the main portion 1843 of the cartridge housing 1842. The receiving slot 1854 may also extend within a portion of the projecting portion 1845.

A groove 1858 may be cut into one of the first and second body portions 1844, 1846. The groove 1858 may extend from a sidewall 1862 of the cartridge housing 1842. The groove 1858 may include a detent notch 1860 which may branch off of the groove 1858. An end of the groove 1858 opposite the sidewall 1862 may include a depression 1864. A spring loaded pin 1866 may extend at least partially into the depression. Though a spring loaded pin 1866 is shown, other embodiments may include another suitable bias member. For example, the spring loaded pin may be replaced by a molded spring arm which may be formed integrally with the body portion 1844, 1846.

The other of the first and second body portions 1844, 1846 may include a groove or alternatively a channel 1868 which extends through that body portion 1884, 1846. The channel 1868 may extend from the sidewall 1862 of the cartridge housing 1842 to a second detent notch 1868. When the first and second body portions 1844, 1846 are coupled to one another, the detent notches 1860, 1870 may be positioned in alignment with one another.

A pivot arm 1872 may be coupled to the cartridge housing 1842. The pivot arm 1872 may pivot about the axis of a pivot pin 1874 which extends through at least a portion of the cartridge housing 1842. The pivot arm 1872 may be biased, via a bias member 1876 (e.g. torsion spring) to a home orientation. The pivot arm 1872 may be pivoted from the home position (shown) toward a cavity 1875 in the cartridge housing 1842 and into an actuated position. The pivot arm 1872 may automatically be urged back to the home position by the bias member 1876. In some embodiments, the cartridge housing 1842 may include a projection or stop which may inhibit rotation of the pivot arm 1872 beyond the home position.

In some embodiments, the cartridge housing 1842 may include at least one pivot arm sensor 1877A, B. The pivot arm sensor(s) 1877A, B may generate an output signal which may change in relation to the pivotal location of the pivot arm 1872. Any suitable sensor type may be used. For example, an encoder or rotary potentiometer may monitor rotation of the pivot arm 1872 about the pivot pin 1872 or a magnetic or inductive sensor may monitor the position of a metallic body on the pivot arm 1872. As shown, the pivot arm sensors 1877A, B are depicted as a first and second microswitch. When the pivot arm 1872 is in the home position the microswitch forming the first pivot arm sensor 1877A may be depressed. When the pivot arm 1872 is in the actuated position, the microswitch forming the second pivot arm sensor 1877B may be depressed.

A sensor 1878 may also be coupled to the cartridge housing 1842. The sensor 1878 may be positioned to monitor the receiving slot 1854. In the example shown, the sensor 1878 is disposed along an edge of the receiving slot 1854. The sensor 1878 may monitor for the presence of a cutting cartridge 1800 in the receiving slot 1854. The sensor 1878 may also detect improper loading of a cutting cartridge 1800 into the receiving slot 1854. The sensor 1878 may generate a data signal indicative of the presence, absence, or improper loading of a cutting cartridge 1800 in the receiving slot 1854. Depending on the sensor 1878 used, the sensor 1878 may only sense presence or absence of a cutting cartridge 1800. The sensor 1878 may be any suitable sensor type. For example, the sensor 1878 may be, though is not limited to, a magnetic sensor (the cutting cartridge 1800 would include

a magnetic or metallic body in such examples), inductive sensor, an ultrasonic sensor, a beam interrupt sensor, optical sensor, or microswitch. In some embodiments, the blade element **1810** of the cutting cartridge **1800** may be a metallic body and the sensor **1878** may be configured to sensor the presence and/or position of the blade element **1810**.

Referring now to FIGS. **162-163**, when a cutting cartridge **1800** is installed in the receiving slot **1854**, the pegs **1824**A-C may displace along the groove **1858** and channel **1868** of the receiving slot **1854**. The groove **1858** and channel **1868** may act as guides which may direct a cutting cartridge **1800** along a desired path as the cutting cartridge **1800** is installed into the port opener assembly **1840**. Peg **1824**C of the cutting cartridge **1800** may displace into and depress the spring loaded pin **1866** of the cartridge body **1842**. Once the spring loaded pin **1866** is depressed, the cutting cartridge **1800** may then be shifted to displace pegs **1824**A, B toward the detent notches **1860**, **1870**. The cutting cartridge **1800** may then be released. As the spring loaded pin **1866** restores from the depressed state, the cutting cartridge **1800** may be pressed backwards and the pegs **1824**A, B may seat into engagement with the detent notches **1860**, **1870** (best shown in FIG. **163**).

In the example embodiment, the sensor **1878** may be a beam break sensor. The beam of the sensor **1878** may not be broken until the cutting cartridge **1800** is fully installed into the receiving slot **1854**. The notch **1827** may ensure that the beam has clearance as the cutting cartridge **1800** is being advanced into the receiving slot **1854**. The notch **1827** of the cutting cartridge **1800** may, for example, provide clearance for the beam of the sensor **1878** until the pegs **1824**A, B are in engagement with the detent notches **1860**, **1870**. Once the pegs **1824**A, B are urged into engagement with the detent notches **1860**, **1870**, the notch **1827** may pass out of alignment with the beam. At this point, the cartridge body **1802** may to interrupt the beam of the sensor **1878** such that the sensor **1878** may register that the cutting cartridge **1800** is properly installed in the receiving slot **1854**.

To remove a cutting cartridge **1800**, the cutting cartridge **1800** may be pressed into the receiving slot **1854** such that the peg **1824**C again depresses the spring loaded pin **1866**. This may move pegs **1824**A, B out of engagement with the detent notches **1860**, **1870**. The cutting cartridge **1800** may be shifted to displace pegs **1824**A, B toward the channel **1868** and groove **1858**. The cutting cartridge **1800** may then be extracted from the receiving slot **1854**.

Referring now to FIG. **164**, an example port opening station **1612** is depicted. A grasper **1624** of a robotic arm **360** (see, e.g., FIG. **111**) in which a bag **26** is held is shown approaching a port opening assembly **1840** of the port opener station **1612**. As the grasper **1624** approaches, the robotic arm **360** may align a port **1654** of the bag **26** with the slot **1812** of the cutting cartridge **1800**. Referring now also to FIG. **165**, the robotic arm **360** may then displace the grasper **1624** such that the port **1654** of the bag **26** is positioned within the slot **1812** between the pivot arm **1872** of the port opening assembly **1840** and the blade element **1810** of the cutting cartridge **1800**. In some examples, the grasper **1624** may be displaced under the pivot arm **1872** and then raised to displace the port **1654** into position.

Referring now also to FIG. **166**, to open the port **1654**, the robotic arm **360** (see, e.g., FIG. **111**) may displace the grasper **1624** such that the port **1654** is driven into the blade element **1810** of the cutting cartridge **1800**. As shown, the grasper **1624** may include a boom element **1900**. The boom element **1900** may be a rigid member which is fixedly coupled to the grasper **1624**. As the grasper **1624** drives the port **1654** toward the blade element **1810**, an end of the boom element **1900** may contact a surface of the pivot arm **1872** of the port opening assembly **1840**. The boom element **1900** may include a roller **1902** on the end of the boom element **1900** which contacts the pivot arm **1872**. As the grasper **1624** advances the port **1654** into the blade element **1810**, the boom element **1900** may press against the pivot arm **1872** and cause the pivot arm **1872** to rotate. The pivot arm **1872** may thus be displaced so as to closely follow behind the portion of the port **1654** which is to be severed in order to open the port **1654**. As the port **1654** is cut, the pivot arm **1872** may press the port **1654** against the blade element **1810**. Additionally, once the port **1654** has been cut open by the blade element **1810**, the pivot arm **1872** may sweep the severed end of the port **1654** past the blade element **1810** to the cavity **1875** (see, e.g., FIG. **161**) in the cartridge housing **1842**. Once in the cavity **1875**, the severed portion of the port **1654** may fall through the wide region **1818** of the slot **1812** and out of the port opening assembly **1840**. In certain examples, the severed portion of the port **1654** may fall or be directed into a waste chute **1634** (see, e.g., FIG. **111**) included in the enclosure **12** (see, e.g., FIG. **111**) after passing out of the port opening assembly **1840**.

As shown, the cartridge housing **1842** may include at least one opening **1873** through the cartridge housing **1842** into the cavity **1875**. Where the enclosure **12** of the system **10** is positively pressurized, the opening may allow clean filtered air blown into the system **10** into the cavity **1875**. This may aid in creating a draft which may tend to blow the severed end of a port **1654** downwardly through the wide region **1818** of the slot **1812** and out of the port opening assembly **1840**.

Referring now to FIG. **167**, once a port **1654** of a bag **26** has been opened at the port opening station **1612** (see, e.g., FIG. **111**), the bag **26** may be displaced to a filling station **1614** of the system **10**. As shown, a filling station **1614** may include a fill assembly **1908**. The fill assembly **1908** may include a fill nozzle **1910** which may be coupled to a terminal end of a supply line **1912** that carries purified water or a mixed fluid (e.g. saline). The fill assembly **1908** may also include a drain assembly **1914**. A funnel shaped drain inlet **1916** and drain line **1918** may be included in the drain assembly **1914**. The drain inlet **1916** and drain line **1918** may pivot between a nozzle aligned position under the fill nozzle **1910** and a retracted position (shown) in which the drain inlet **1916** has been displaced so that a bag **26** may be placed in the fill assembly **1908**. Example embodiments of drain assemblies are as described above in relation to FIGS. **71**A-**71**B. The fill assembly **1908** may also include a bag sensing assembly **1920**. The bag sensing assembly **1920** may include a number of a bag characteristic sensors **444**A-C. Bag characteristic sensors **444**A-C and sensing of bag **26** traits may be as described above with respect to FIG. **66**.

Referring now to FIGS. **168-169**, the fill assembly **1908** may include a grasper **1922**. The grasper **1922** may be opened (FIG. **168**) by a grasper driver **1924** to accept ports **1654** of a bag **26** and driven closed (FIG. **169**) once the robotic arm **360** (see, e.g., FIG. **111**) has displaced to preprogrammed bag **26** docking coordinates. Coordination of the grasper **1922** and the robotic arm **360** may be orchestrated by the control system **15** (see, e.g., FIG. **111**). As a bag **26** is displaced into the fill assembly **1908**, the opened port **1654** may be seated against the outlet of the fill nozzle **1910**. As mentioned elsewhere herein, the robotic arm **360** (see, e.g., FIG. **111**) may collect and displace other bags **26** to various stations of the system **10** as a bag **26** is filled at the fill station **1614**.

The grasper **1922** shown in the example fill assembly **1908** includes a set of opposed jaws **1926**A, B which may be displaced toward one another to capture ports **1654** of a bag **26** therebetween. In the example embodiment, the jaws **1926**A, B include a first jaw tier **1928**A and a second jaw tier **1928**B. The first jaw tiers **1928**A may capture the unopened ports **1654** of the bag **26**. The second jaw tiers **1928**B may be disposed more proximate the fill nozzle **1910** than the first jaw tiers **1928**A. The second jaw tiers **1928**B may close around the opened port **1654** at a point which is close the fill nozzle **1910**. Thus, the second jaw tiers **1928**B may serve to constrain the open port **1654** in alignment with the axis of the fill nozzle **1910** and help to ensure that the fill nozzle **1910** correctly seats into the opened port **1654**.

Referring now to FIG. **170**, an exemplary fill nozzle **1910** is depicted. As mentioned elsewhere herein, the fill nozzle **1910** may be included as part of a fluid supply set. The fluid supply set may be coupled to the output of a mixing circuit **348** and may be periodically replaced as the system **10** is used. The fluid supply set may include the supply line **1614** shown in FIGS. **167-169** and the sterilizing filter **1642** shown in FIG. **112** for example. A connector or fitting for coupling may also be included in a fluid supply set to facilitate coupling to an output of, for example, a mixing circuit **348** (see, e.g., FIG. **205**).

The fill nozzle **1910** may include an inlet end **1930** and an outlet end **1934**. The supply line **1640** (see, e.g., FIG. **167**) may be coupled over the inlet end **1930**. The inlet end **1930** may include at least one barb **1936** (two are shown in the example embodiment). The at least one barb **1936** may aid in retaining the supply line **1640** in place on the fill nozzle **1910**. The fill nozzle **1910** may also include a midbody **1932**. The midbody **1932** may be wider than the remainder of the fill nozzle **1910** and may be disposed between the inlet and outlet ends **1930**, **1934** of the fill nozzle **1910**. The change in width from the inlet and outlet ends **1930**, **1934** to the midbody **1932** may be continuous as opposed to stepwise in certain examples. In the exemplary embodiment of FIG. **170**, the midbody **1932** may include variable width transition spans at each end of the midbody **1932** which from the transition between the inlet and outlet ends **1930**, **1934** and the midbody **1932**. In the example embodiment, the midbody **1932** includes a rounded end **1938** and an opposing tapered end **1940** for the variable width transition spans. The midbody **1932** may include a series of ribs **1942**, ridges, bumps, nubs, or other texturing to facilitate grasping by a user through a glove interface **352** (see, e.g. FIG. **111**).

Referring now also to FIGS. **171-172**C, the fill nozzle **1910** may be installed within a nozzle dock **1944**. The nozzle dock **1944** may include a stationary body **1946** and a clasping body **1948**. The stationary body **1946** may be retained in a fixed position within the enclosure **12** (see, e.g., FIG. **111**) when bags **26** are being filled. The clasping body **1948** may be displaceable along an axis with respect to the stationary body **1946** between a clasping position (shown in FIG. **171**) and an open position (see, FIG. **172**A). The clasping body **1948** may be biased to the clasping position by at least one bias member **1952**.

A fill nozzle **1910** may be captured within the nozzle dock **1944** at two capture points. The clasping body **1948** may receive a portion of the fill nozzle **1910** and the stationary body **1946** may receive another portion of the fill nozzle **1910**. When the clasping body **1948** is in the clasping position, a portion of the fill nozzle **1910** may be captured by the clasping body **1948** and a portion of the fill nozzle **1910** may be captured by the stationary body **1946**.

As shown, a portion of the nozzle dock **1944** is broken away in FIG. **171**. The clasping body **1948** may displace along guide projections **1950** included on each side of the stationary body **1946**. The clasping body **1948** may be coupled to the stationary body **1946** via fasteners **1954**. The fasteners **1954** may extend through bores **1958** (only one shown in FIG. **171**) in the stationary body **1946**, through an associated one of the guide projections **1950**, and into threaded engagement with holes in the clasping body **1948**. A bias member **1952** may be captured between an end of each bore **1958** and a head **1956** of each fastener **1954**. As the clasping body **1948** is displaced to the open position, the fasteners **1954** may be displaced in tandem as they are threadedly engaged with the clasping body **1948**. The head **1956** of each fastener **1954** may cause the associated bias member **1952** to become stressed (compressed in the example embodiment) as the head **1956** displaces along the bore **1958**. When the clasping body **1948** is released, the bias members **1952** may restore to a less stressed state urging the fasteners **1954** and clasping body **1948** to return to the clasping position.

The stationary body **1946** and clasping body **1948** may each include a notch **1960**. The notches **1960** in the stationary body **1946** and the clasping body **1948** may each lead to a transition span receptacle. In the example shown, the stationary body **1946** may include a tapered recess **1962** to which the notch **1960** in the stationary body **1946** extends. The clasping body **1948** may include a rounded recess **1964** to which the notch **1960** in the clasping body **1948** extends.

As shown in the progression of FIGS. **172**A-**172**C, to install a fill nozzle **1910** into the nozzle dock **1944**, the inlet end **1930** may be introduced into the notch **1960** in the clasping body **1948** and the rounded end **1938** of the midbody **1932** may be seated into the rounded recess **1964**. The clasping body **1948** may be pulled to the open position (FIG. **172**A). The fill nozzle **1910** may then be rotated such that the outlet end **1934** passes into the notch **1960** in the stationary body **1946** (FIG. **172**B). The rounded end **1938** of the midbody **1932** and rounded recess **1964** within which it is disposed may act as a ball and socket type interface to facilitate rotation of the fill nozzle **1910**. The clasping body **1948** may then be released and the bias members **1952** may return the clasping body **1948** to the clasping position. As the clasping body **1948** is urged toward the clasping position, the tapered end **1940** of the midbody **1932** may seat into the tapered recess **1962** of the stationary body **1946**. When the clasping body **1948** reaches the clasping position, the fill nozzle **1910** may be clasped in place within the nozzle dock **1944** (FIG. **172**C). The interaction of the rounded end **1938** with the rounded recess **1964** and the tapered end **1940** with the tapered recess **1962** may cause the fill nozzle **1910** to self-center within the nozzle dock **1944** under the bias force of the bias members **1952**. As the stationary body **1946** may be fixedly mounted within an enclosure **12** (see, e.g., FIG. **111**), this self-centering may ensure that the outlet end **1934** of the fill nozzle **1910** is reliably and repeatably located in a known position. This may facilitate displacement of a port **1654** of a bag **26** into engagement with the outlet end **1934** via a robotic arm **360** (see, e.g., FIG. **111**) while imposing minimal burden on a user as a fluid supply set is replaced. The midbody **1932** may have a length which prevents the bias members **1952** to from returning to a fully relaxed state. Thus, the bias members **1952** may be somewhat stressed when fill nozzle **1910** is installed. This may help to ensure that the fill nozzle **1910** remains centered in the nozzle dock **1944** during use.

As shown in FIGS. **171-172**C, the nozzle dock **1944** may also include at least one dock sensor **1966** (see also FIG. **173**). The at least one dock sensor **1966** may monitor the position of the clasping body **1948**. The at least one dock sensor **1966** may also monitor for the presence and/or proper installation of a fill nozzle **1910** within the nozzle dock **1944**. A control system **15** of the system **10** may receive data signals from the at least one dock sensor **1966** and may inhibit filling of bags **26** in the event that the clasping body **1948** is not in the clasping position and/or when a fill nozzle **1910** is not properly seated within the nozzle dock **1944**. The control system **15** may also base a fluid supply set replacement schedule on data from the at least one dock sensor **1966**. For example, when the control system **15** receives an indication that a fill nozzle **1910** has been installed, a counter (e.g. number of bags **26** which can be filled before replacement of fill nozzle **1910**) may be reset.

Referring now to FIGS. **173-174**, in certain embodiments, the nozzle dock **1944** may not include a clasping body **1948** which is displaceable with respect to a stationary body **1946** of the nozzle dock **1944**. Instead the nozzle dock **1944** may include a main body **1921** from which two nozzle cradles **1923** project. Each of the nozzle cradles **1923** may be immobile and may not displace with respect to one another. Each of the nozzle cradles **1923** may include a notch **1960**. As with the embodiment described in relation to FIGS. **171-172**C, each of the notches **1960** may extend to a transition span receptacle. One of the transition span receptacles may be a rounded recess **1964** and the other may be a tapered recess **1962**.

In such embodiments, the fill nozzle **1910** may include a first portion **1931** and a second portion **1933** which are displaceable with respect to one another. The first portion **1931** may include the inlet end **1930** and a portion of the midbody **1932**. The outlet end **1934** may also be included as part of the first portion **1931**. As shown, an intermediary conduit segment **1935** may connect the outlet end **1934** to the remainder of the first portion **1931**. The second portion **1933** may include a portion of the midbody **1932**. The second portion **1933** may include a pocket **1939**. A retainer clip **1927** may be coupled into a notch on the outlet end **1934** and may inhibit separation of the first and second portion **1931**, **1933**. The midbody **1932** may include the same transition spans described above in relation to FIG. **170**. In alternative embodiments, the retainer clip **1927** may be replaced by a press fit feature molded into the outlet end **1934**.

The first portion **1931** and second portion **1933** may be biased apart from one another by at least one bias member **1937**. In the example embodiment the bias member **1937** is depicted as a compression spring. The bias member **1937** may be disposed within the pocket **1939** of the second portion **1933** and may exert a bias force against the portion of the midbody **1932** included in the first portion **1931**. When the bias member **1937** is in a relaxed state, the midbody **1932** portions of the first and second portion **1931**, **1933** may be spread apart from one another by a distance. This distance may be controlled based on the location of the retainer clip **1927** on the outlet portion **1934** as the retainer clip **1927** may prevent displacement of the second portion **1933** beyond the location of the retainer clip **1927**.

To install the fill nozzle **1910** in the nozzle dock **1944**, inlet end **1930** may be introduced into the notch **1960** in the one of the cradles **1923**. The rounded end **1938** of the midbody **1932** may be seated into the rounded recess **1964**. The second portion **1933** of the fill nozzle **1910** may then be pressed against the first portion **1931** to decrease the distance between the first and second portion **1931**, **1933** and compress the bias member **1927**. This may allow the fill nozzle **1910** to be rotated such that the outlet end **1934** passes into the notch **1960** in the opposing cradle **1923**. The rounded end **1938** of the midbody **1932** and rounded recess **1964** within which it is disposed may act as a ball and socket type interface to facilitate rotation of the fill nozzle **1910**. The second portion **1933** may then be released and the bias member **1927** may urge the tapered end **1940** of the midbody **1932** into the tapered recess **1962** of that cradle. When the fill nozzle **1910** is so installed in the nozzle dock **1944**, the bias member **1927** may not be in a completely relaxed state. The bias member **1927** may exert some pressure against the first and second portion **1931**, **1933**. The interaction of the rounded end **1938** with the rounded recess **1964** and the tapered end **1940** with the tapered recess **1962** may cause the fill nozzle **1910** to self-center due to this pressure. This self-centering may help to ensure that the outlet end **1934** of the fill nozzle **1910** is reliably and repeatably located in a known position.

Referring now to FIGS. **175** and **176**, after a bag **26** has been filled and sealed (e.g. via tube sealing assembly **906** of FIGS. **248-249**), the bag **26** may be displaced to a labeling station **1618**. A labeling station **1618** may include a receiving bay **1970**, a labeler **1972**, and an actuator assembly **1974**. The receiving bay **1970** may be a basket, bin or similar container into which a robotic arm **360** or gantry may lower a filled and sealed bag **26**. The labeler **1972** may be any suitable labeler. In the example embodiment, a thermal transfer ribbon labeler **1972** is shown. A wall **1978** of the receiving bay **1970** may include a print aperture **1980**. Printing components (e.g. a transfer ribbon and print head) of the labeler **1972** may access the receiving bay **1970** via the print aperture **1980**. The actuator assembly **1974** may include at least one actuator **1982** which may be powered to displace a pressure plate **1976** coupled to an output shaft **1984** of the actuator **1982**. Guide rods **1986** attached to the pressure plate **1976** which may displace along slide bearings **1988** may also be included in the actuator assembly **1974**. Alternatively, the guide rods **1986** may be stationary and slide bearings **1988** may slide along the guide rods **1986**.

Once a filled and sealed bag **26** has been displaced (e.g. lowered into, for example, the system **10** of FIG. **111**) into the receiving bay **1970**, the actuator assembly **1974** may be powered. This may drive the pressure plate **1976** against the bag **26** and press the bag **26** against the wall **1978** of the receiving bay **1970** including the print aperture **1980** (see FIG. **176**). The guide rods **1986** may aid in ensuring that the pressure plate **1976** remains perpendicular to the axis of the output shaft **1984** and parallel to the wall **1978**. With the bag **26** pressed against the wall **1978**, the labeler **1972** may create a label for the bag **26**. In the example embodiment, the labeler **1972** may print a label directly on the exterior surface of the bag **26**. Pressure applied via the pressure plate **1976** of the actuator assembly **1974** may ensure that the exterior of the bag **26** is flat when labeling of the bag **26** occurs. The bag **26** may then be displaced to an output assembly **1626** (see, e.g., FIG. **111**) which may include a slide or chute (see, e.g., output chute **560** of FIG. **108**) and dispensed from the enclosure **12** (see, e.g., FIG. **111**).

Referring now to FIG. **177**, another exemplary system **10** for producing and packaging medical fluids is depicted. As shown, the system **10** may include a medical water production device **14** such as any of those depicted herein. The system **10** may also include a mixing circuit **348** for generating a specified solution (e.g. 0.9% saline). The system **10** may include a sensor suite **350** which may monitor the

quality of purified water produced by the medical water production device **14** and may monitor the solution generated by the mixing circuit **348**. The sensor suite **350** may include any number of different types of water quality sensors. Any water quality sensors described herein may be included. An example mixing circuit **348** and an example sensor suite **350** are described later in the specification.

The system **10** also includes an enclosure **12**. The enclosure **12** may provide a clean room environment for the components of the system **10** contained therein. The enclosure **12** itself may also be contained within a clean room environment. In such embodiments, the enclosure **12** may be maintained at a higher clean room standard than the room in which it is located. In some embodiments, the enclosure **12** may be held at positive pressure by a blower system **600**.

In the example embodiment, the enclosure **12** is partitioned into a first section **96** and a second section **98**. Each of these sections may be held at slightly different positive pressures. For example, the first section **96** may be held at a first pressure which is positive with respect to the surrounding environment. The second section **98** may be held at a pressure higher than the first pressure. Filling of bags **26** may occur in the most stringently controlled environment of the system **10**. Various filters such as HEPA filters may be included to help ensure any air blown into the enclosure **12** to maintain positive pressure is clean.

Referring now also to FIG. **178**, the first section **96** may be an antechamber which may be utilized for preparing various consumables used by the system **10**. For example, a stock of bags **26** may be placed in the antechamber. Stopper magazines **466** (such as any of those described herein) may also be stocked within the antechamber. Sampling vials **532** (see, e.g., FIG. **103**) may also be kept in stock within the antechamber. This may help to minimize the need to access the interior of the enclosure **12** during operation of the system **10**. The first section **96** may also include certain testing equipment that may be used to verify bags **26** have been filled according to predefined criteria. Sampling ports in the fluid circuit may be accessible via the antechamber as well.

The second section **98** may be constructed as a glove box type enclosure with gloved interfaces **352** which may be used to manipulate certain components of the system **10** within the enclosure **12**. The second section **98** may include a filling subsystem **610** of the system. A filling subsystem **610** may include a bag retainer **602**, filling station **356**, and a sealing station **358**. A bag **26** may be collected from the antechamber through a door **604** between the first section **96** and second section **98** of the enclosure **12** via the gloved interfaces **352**. This bag **26** may be placed at the bag retainer **602**. A robotic manipulator **606** including a grasper may collect the bag **26** from the bag retainer **602** and displace the bag **26** to the filling station **356**. Fluid may be dispensed into the bag **26** at the filling station **356**. This fluid may be purified water (e.g. WFI water), or a mixture of fluid generated at a mixing subsystem similar to those described in relation to FIG. **2**A and FIG. **2**B. Bags **26** may also include a concentrate as described above in relation to FIGS. **5**A-**6** for example. From the filling station **356**, the robotic manipulator **606** may displace the filled bag **26** to a sealing station **358**. An access to the interior volume of the bag **26** may be sealed closed at the sealing station **358** (e.g. via stoppering, RF welding, etc.).

As shown, the example embodiment includes a bag retainer **602** which may hold a single bag **26** at a time. In alternative embodiments, the bag retainer **602** may be replaced by a bag feeder **354** similar to that described above in relation to FIGS. **59**-**65** for example. Similarly, the bag feeder **354** shown in the example system **10** in FIG. **58** may be replaced by a bag retainer **602**. A bag retainer **602** may be useful in implementations where only a small amount of bags **26** need to be produced or where a system **10** with a smaller footprint may be desired. A bag retainer **602** may further be useful in scenarios where the type of bag **26** filled by the system **10** is frequently changed.

Referring now to FIG. **179**-**180**B, the bag retainer **602** may include a clasp **612** that may be pivotally attached to a base plate **614**. The clasp **612** may be opened and a user may, via the gloved interfaces **352**, hold a bag **26** in place at the bag retainer **602**. The clasp **612** may then be closed against the base plate **614**. The clasp **612** may frictionally retain a port **392** of the bag **26**. In some embodiments, the clasp **612**, base plate **614** or both the clasp **612** and base plate **614** may include a receptacle **616** which accepts a member **618** included on the port **392** to aid in retaining the bag **26** in place in the bag retainer **602**. The clasp **612** may latch in place when in the closed position. This latching may be accomplished via a mechanical latch or may be accomplished via a magnet in one of the base plate **614** and clasp **612** and a metallic and/or magnetic body in the other of the base plate **614** and clasp **612**. The bag retainer **602** may also aid in locating a port **392** of the bag **26** through which the bag **26** is to be filled in a fixed and known location. As shown, the bag retainer includes a locating pin **615** (see also FIG. **182**). The bag **26** may be loaded into the bag retainer **602** such that the locating pin **615** is seated into the filling port **392**. As the locating pin **615** is fixed, locating pin **615** may ensure that the filling port **392** is in a known location prior to retrieval of the bag **26**.

Referring now to FIG. **181**, with a bag **26** in place in the bag retainer **602**, the control system **15** of the system **10** may displace a robotic manipulator **606** to the bag retainer **602**. In the example embodiment, the robotic manipulator **606** may be displaceable about a number of axes. In the example embodiment, a first rail **622** defining a first axis along which the robotic manipulator **606** may be displaced is included. The robotic manipulator **606** may include a grasper **620** which may close around the ports **392** of the bag **26** to grasp the bag **26**. The grasper **620** may be included on a second rail **624** defining a second axis along which the grasper **620** of the robotic manipulator **606** may be displaced. The second axis is substantially perpendicular to the first axis in the example embodiment.

As shown in FIG. **182**, once the bag **26** has been grasped, the robotic manipulator **606** may displace the grasper **620** downward along the second rail **624** to pull the bag **26** free of the bag retainer **602**. In some embodiments, the downward force exerted by the robotic manipulator **606** cause the clasp **612** of the bag retainer **602** to open. In other embodiments, the force may not open the clasp **612**, but be sufficient to overcome any frictional forces holding the bag **26** in place within the bag retainer **602**. The robotic manipulator **606** may then displace along the first rail **622** to move the bag **26** toward the filling station **356** as shown in FIG. **183**.

Referring now to FIG. **184**A, once the robotic manipulator **606** has displaced the bag **26** such that a port **392** of the bag **26** is in alignment with a filling nozzle **430**, the control system **15** may command the robotic manipulator **606** to raise the grasper **620** toward the filling station **356**. In the example shown, the fill nozzle **430** is also displaceable and the fill nozzle **430** may be displaced toward the port **392** while the grasper **620** of the robotic manipulator **606** is raised. The fill nozzle **430** may be tapered so as to help the fill nozzle **430** enter into the port **392** of the bag **26** as shown

in FIG. **184**A. Once the fill nozzle **430** is located within the port **392** the control system **15** may command the filling station **356** to dispense fluid into the bag **26**. Though not shown in FIG. **184**A, in some embodiments, the filling station **356** may include a set of bag characteristic sensors **444**A-C such as those shown and described in relation to FIG. **66** for example. As described elsewhere herein, the control system **15** may determine a fill volume for the bag **26** based on data collected from the bag characteristic sensors **444**A-C.

Referring now to FIG. **184**B, the filling nozzle **430** may be included in a bias assembly **611** including a bias member **613** which exerts a force against the filling nozzle **430** that tends to press the filling nozzle **430** firmly into the port **392** of the bag **26**. A bias assembly **611** may also be included in other filling stations **356** described herein such as that shown and described in relation to FIG. **66**. As shown, the filling nozzle **430** is coupled (integral with in the example) an inlet fitting **617**. In the example, a section of conduit **619** connects the inlet fitting **617** and filling nozzle **430**. The conduit **619** may include a flange **621**. A housing **623** (see FIG. **184**A) including a main body **627** and an end cap **625** is also shown. The end cap **625** may include a passage through which the filling nozzle **430** may project, but too small for the flange **621** to pass through. When the conduit **619** and bias member **613** are housed within the housing **623**, the bias member **613** may be loaded between an interior face of the housing **623** and the flange **621**. The port **392** of the bag **26** may press the filling nozzle **430** into the housing **623** against the force exerted by the bias member **613** during filling. The restoring force of the bias member **613** may consequentially push the filling nozzle **430** robustly into the port **392**. In the example, the bias member **613** is shown as a compression spring. In alternative embodiments, any suitable bias member **613** may be used.

Referring now to FIGS. **185-188**, once the bag **26** has been filled, the bag **26** may be lowered away from the fill nozzle **430** by displacing the grasper **620** along the second rail **624**. The fill nozzle **430** may also be raised. The robotic manipulator **606** may be displaced along the first rail **622** toward the sealing station **358**. The sealing station **358** may include a support cradle **626**. The support cradle **626** may help to locate and hold the port **392** of bag **26** during a sealing operation. In the example embodiment, the robotic manipulator **606** is displaced such that the bag **26** is moved slightly passed a position in which the port **392** to be sealed would be aligned with the ram **464** (FIG. **186**). The grasper **620** may be displaced along the second rail **624** to raise the bag **26** toward the sealing station **358** (FIG. **187**). The robotic manipulator **606** may then be displaced so as back track along the rail **622** and bring the port **392** into the support cradle **626**. This may guide the port **392** into alignment with the ram **464**.

Referring now to FIG. **189**, an example support cradle **626** is depicted. As shown, the support cradle **626** may include a trough **760**. The trough **760** may include a first portion **762**A and a second portion **762**B. The first portion **762**A of the trough **760** may extend to a funneled opening **764** in a top face **766** of the support cradle **626**. The funneled opening **764** may aid in directing stoppers **476** into the trough and into alignment with the axis of the port **392** of the bag **26** which is to be sealed. The first portion **762**A may also be referred to as a stopper guide portion of the trough **760** and may be sized so surround the majority of the stopper **476** so as to guide the stopper **476** as the ram **464** translationally displaces the stopper **476** into the port **392**. The second portion **762**B of the trough **760** may locate the port **392** during the sealing process. As shown in FIG. **188**, the port **392** may be displaced into the trough **760** in a direction which is generally perpendicular to the axis of the trough **760**. The second portion **762**B of the trough **760** may be flanked by contoured walls **768**. The contoured walls **768** may aid in channeling the port **392** into the second portion **762**B of the trough **760** as this perpendicular displacement occurs. The trough **760** of the example support cradle **626** may also include a ledge **770**. The ledge **770** may form a stop surface which may catch on the step **516** of the stopper **476** as the stopper **476** is displaced into the port **392** of the bag **26**. Two removal notches **772** flanking the trough **760** above the ledge **770** are also recessed into the support cradle **626**. These notches **772** may allow the port **392** to easily displace out of the support cradle **626** once the stopper **476** is in place in the port **392**.

Referring now also to FIG. **190**, to seal the port **392** the control system **15** may command a ram driver **462** of the sealing station **358** to advance the ram **464** toward the port **392** of the bag **26** which is to be sealed. The ram **464** may drive a stopper **476** from the stopper magazine **466** into the port **392** to seal the port **392**. As mentioned above, the funneled opening **764** and stopper guide portion **762**A of the support cradle **626** may aid in ensuring that the stopper **476** cleanly enters into the port **392**. The control system **15** may then command the ram driver **462** to retract the ram **464** and the robotic manipulator **606** may be actuated to remove the bag **26** from the sealing station **358**. The control system **15** may then displace the robotic manipulator **606** to a drop off location for the bag **26** as shown in FIG. **191**.

Referring now to FIG. **192**, the filling subsystem **610** may include a directing chute **628** which aids in directing the bag **26** once released from the grasper **620**. The robotic manipulator **606** may also include a guide plate **630**. The guide plate **630** may ensure that as the bag **26** is released from the grasper **620**, the bag **26** is directed onto the directing chute **628**. Once the bag **26** has reached the bottom of the directing chute **628**, the bag **26** may be manually labeled via the gloved interfaces **352** or placed in a quarantine repository **362** while various testing (e.g. the endotoxin testing described above) is completed.

Referring now to FIGS. **193-194**, in certain embodiments, a system **10** may fill a plurality of bags **26** in parallel at the same time. The bags **26** may be provided in packets **1082** within a carrier **1080**. The carrier **1080** may include a number of a number of compartments **1084** in which the packets **1082** may be held. In the example embodiment, the carrier **1080** includes six compartments **1084** and holds six packets **1082**. In other embodiments, the number of compartments **1084** may differ. Preferably, the number of compartments **1084** may be selected such that a user may comfortably transport the carrier **1080** when all the bags **26** in the carrier are full. Different carriers **1080** for bags **26** of different volumes may be provided with carriers **1080** for smaller volume bags **26** having a greater number of compartments **1084**. The carrier **1080** may, for example, be constructed of a plastic sheeting or a medical grade wax paper product. Such materials may be preferable where the carrier or packets **1082** may be filled within an enclosure **12** such as those described elsewhere herein. In other embodiments, cardstock may be used. The carrier **1080** may include a handle **1087** which may facilitate carrying by a user or grasping by a grasper **418** of a robotic arm **360**.

Referring now primarily to FIGS. **195** and **196**, each packet **1082** may include a cover flap **1086**. The cover flap **1086** may include a passage **1088** through which a fill line **1090** may extend. The cover flap **1086** may be secured to a

pouch portion **1092** of the packet **1082**. A bag **26** may be provided in the pouch portion **1092**. The pouch portion **1092** may be expandable so as to accommodate the increase in volume of the bag **26** as the bag **26** is filled. For instance, the side walls of the pouch portion may include bellows features. The packet **1082** is removed in FIG. **196** to reveal an exemplary bag **26**. In the example embodiment, sections of hook and loop tape **1096** may be used to couple the cover flap **1086** to the pouch portion **1092** when the cover flap **1086** is in a closed position. Any other suitable coupling may be used. When retained to the pouch portion **1092**, the cover flap **1086** may hold an administration set **1094** attached to the bag **26** in place with the packet **1082**. A slide clamp **1098**, roller clamp **1100**, other occluding arrangement may be placed in an occluding state on the line of the administration set **1094** to prevent flow through the administration set **1094** when the bag **26** is filled. Alternatively, the administration set **1094** may include a frangible which prevents flow therethrough until broken by a user. The administration set **1094** may be any desired administration set **1094** and may include one or more of a drip chamber, burette, furcation (Y-site, T-site, etc.), luer locks, septum, etc.

Referring now to FIGS. **197** and **198**, each of the fill lines **1090** extending from the packets **1082** may be coupled to a spiking adapter **1102**. As best shown in FIG. **198**, the spiking adapter **1102** may include a number of radial recesses **1104**. The recesses **1104** may be recessed into the exterior side wall of the spiking adapter **1102**. The number of recesses **1104** may be equal to the number of packets **1082** held by the carrier **1080**. The recesses **1104** may be sized to accept and retain the terminal ends of the fill lines **1090** leading to each bag **26**. The openings of the recesses may be sized to be smaller than the outer diameter of the fill lines **1090**. Thus, the fill lines **1090** may be deformed as they are inserted into the recesses **1104** and resist inadvertent removal once contained therein. The spiking adapter **1102** may also include a number of projections **1106**. The projections **1106** may facilitate grasping by a robotic grasper **418** or by the hand of a user. The recesses **1104** are spaced at regular angular intervals from one another on each side of the projections **1106**. As shown, the terminal ends of the fill lines **1090** may include a seal member **1108**. The seal member **1108** may be a septum which may be pierced to gain access to the lumen of the fill line **1090** and may self-seal once the piercing member is withdrawn. As shown, the radial recesses **1104** of the spiking adapter **1102** may ensure that the fill lines **1090** are straight immediately upstream of the sealing member **1108**.

Referring now to FIG. **199**A and FIGS. **1200-1202**, a number of views of an example filling station **1110** which may accept a spiking adapter **1102** to fill bags **26** is depicted. A diagrammatic example of a filling station **1110** is shown in FIG. **199**A. As shown, the fill station **1110** may include a source **1112**. The source **1112** may communicate with a recirculation valve **1114** and an inlet valve **1116**. The inlet valve **1116** may gate flow to a fluid pump **1118** which may be a diaphragm pump in certain examples. The fluid pump **1118** may deliver fluid from the source to a heater **1120** which may be an in line heater. An air pump **1122** may also be plumbed into the line leading from the fluid pump **1118** to the heater **1120**. A check valve **1123** may be included to ensure liquid does not back flow into the air pump **1122**. From the heater **1120**, fluid may flow to a manifold **1124**. The manifold **1124** may split flow into a number of different flow pathways leading to a spike port **1126**. The spike port **1126** may also be connected to the recirculation valve **1114**.

Fluid flowing from the source **1112** may be routed to the spike port **1126** to be delivered into fill lines **1090** of bags **26** which are disposed within a spiking adapter **1102**. After a filling operation has completed, a cap **1130** of the spike port **1126** may be sealed closed and fluid enter the filling station **1110** may be recirculated while being heated by the heater **1120**. The heater **1120** may maintain the temperature of recirculating fluid within a range of a predefined temperature set point. A control system **15** of the system **10** may continue to recirculate water within the filling station **1110** for a period of time sufficient to cause disinfection at the predefined temperature set point. This water may then be diverted to a drain destination **1128** through the inlet valve **1116**. In certain embodiments, the heater **1120** may maintain the fluid at a temperature of 75-80° C. or higher during disinfection. Thus each time a connection to the spike port **1126** is formed, the spike port **1126** may have been freshly sterilized.

In an alternative embodiment, and referring now to FIG. **199**B, an example filling station **1110** may include a source **1112** which communicates directly with an inlet valve **1116** which may double as a recirculation valve. The spike port **1126** may include connections which may allow for fluid to be recirculated through the spike port **1126** as described above or may allow flow through of fluid to the drain **1128**. During disinfection, fluid may be directed through the heater **1120** and heated to within a range of a temperature set point. This water may be passed to the drain **1128** via a drain valve **1115** without recirculation.

Referring now also to FIG. **203**, a top down view of an example spike port **1126** is depicted. As shown, the spike port **1126** may include a cup like recess **1132**. The recess **1132** may include a number of spikes **1134**. Each of the spikes **1134** may communicate with a line extending from the manifold **1124**. The recess **1132** may be sized to accept a spiking adapter **1102**. As shown, the spike port **1126** may include alignment channels **1136**. The alignment channels **1136** may accept the projections **1106** of the spiking adapter **1102**. The projections **1106** on the spiking adapter **1102** may be position such that when they are within the alignment channels **1136**, the sealing members **1108** of the fill lines **1090** may be in line with respective spikes **1134** in the recess **1132**. Other keying elements may also be used to aid in ensuring proper alignment. Pressing the spiking adapter **1102** into the recess **1132** may cause each of the spikes **1134** to penetrate a respective sealing member **1108** such that fluid may be delivered through the fill lines **1090** into the bags **26**. As the radial recesses **1104** of the spiking adapter **1102** ensure that the fill line **1090** immediately upstream of each sealing member **1108** is straight, the spikes **1134** may be prevented from piercing into the side wall of the fill lines **1090**. The spiking adapter **1102** and sealing members **1108** may be wiped down with a sanitizing agent prior to pressing of the spiking adapter **1102** into the recess **1132**. For example, 70% isopropyl alcohol may be used. Additionally, the cap **1130** of the spike port **1126** may be maintained closed until a time directly prior to formation of the connection. This cap **1130** may also be cleaned with sanitizing agent prior to opening. Materials used to construct the fill conduits **1090** sealing members **1108**, spiking adapter **1102** and spike port **1126** may be selected to be appropriate for the sanitizing agent used and temperatures present during disinfection of the filling station **1110**.

As shown, the spike port **1126** may include a gasket member **1136** which surrounds the recess **1132**. The gasket member **1136** may form a seal against the cap **1130** when the cap **1130** is in a closed position over the recess **1132**. In some

embodiments, a latch (not shown) may be included to maintain the cap **1130** in the closed orientation and ensure that a small amount of pressure is exerted between the cap **1130** and the gasket member **1136** and inhibit inadvertent opening of the spike port **1126**. A recirculation port **1138** is also shown in FIG. **203**. With the cap **1130** closed, the recirculation port **1138** may allow for fluid pumped into the recess **1132** via the spikes **1134** to be removed from the spike port **1126** and circulated back through the heater **1120**. This may help to ensure that the fluid in the spike port **1126** is maintained at a desired temperature during a disinfection process. In certain embodiments, both a recirculation port **1138** and a drain port (not shown) may be included in the spike port **1126**.

Referring now to FIG. **204**, a schematic of an example fluid circuit **710** which may be utilized with any of the systems **10** shown herein is depicted. The mixing circuit **348** and sensor suite **350** (e.g. those mentioned with respect to FIG. **56** and FIG. **177**) may be included in the fluid circuit **710**. As shown, the fluid circuit **710** may draw water from a water source **16**. The water source **16** may be any water source described herein. Fluid from the source **16** may be subjected to any of a variety of pre-treatment operations in certain embodiments. For example, filtration or chemical treatments may be performed prior to water passing to a medical water production device **14**. In the example fluid circuit **710**, fluid from the water source **16** may pass through a water softener **712**. Fluid may be filtered through one or more carbon filter **714** (e.g. two identical carbon filters in series) after passing through the water softener **712**. In some examples a coarse filter or sediment filter may be included upstream of the carbon filters **714**. The filtered water passing out of the one or more carbon filter **714** may then be filtered through a reverse osmosis assembly **716**. In some examples, the water may also be subject to deionization in an electro-deionization unit **717**. Depending on the source water **16**, one or more of the water softener **712**, carbon filter **714**, and reverse osmosis assembly **716** may be optional or may be omitted.

In the example fluid circuit **710**, fluid may pass from the reverse osmosis assembly **716** to a temperature regulator **718**. The temperature regulator **718** may include at least one of a chiller and a heater. For certain applications, the temperature regulator **718** may be omitted. The temperature regulator **718** may lower the temperature of incoming water or may be operated to lower the temperature of incoming water in the event that a temperature sensor (not shown) upstream of the temperature regulator **718** indicates that the incoming water temperature is above a predefined threshold. In some examples, the temperature regulator **718** may be bypassed when the incoming water temperature is below the predefined threshold. The incoming water may then flow to a medical water production device **14**. The medical water production device **14** may be any of those described herein. For example, the medical water production device **14** may be a vapor compression distillation device is certain examples.

In the example embodiment, the output of the medical water production device **14** may include a quick connect fitting **720** which may be used to connect to a remainder of the flow circuit **710**. As shown, fluid passing form the medical water production device **14** may be tested for one or more characteristic of interest. In the example embodiment, two conductivity sensors **722**A, B may be used to collect redundant measurement of the conductivity of water produced by the medical water production device **14**. The control system **15** of the system **10** may monitor the output of the conductivity sensors **722**A, B to ensure that the water is suitable for the intended application. For example, the control system **15** may check to ensure that the water has a conductivity within the allowed range for water for injection (WFI) quality water. Acceptability threshold values for the conductivity sensors **722**A, B (or other sensors in the fluid circuit **710**) may be defined in a compendial standard or water monograph. In certain examples, the conductivity sensors **722**A, B may be selected to have high resolution, accuracy, and reliability at low conductivity values. In certain embodiments, ultra-pure water conductivity sensors optimized for sensing low conductivity fluids may be used. The fluid circuit **710** may also include a total organic carbon (TOC) monitor **724**. In the example embodiment, the TOC monitor **724** is shown as a receiving a slip stream of fluid which then flows to a drain **726**. In other embodiments, the TOC monitor **724** may be in line and may not be located on a slip stream.

After initial sensing, fluid may pass to an inlet pressure sensor **728**. The inlet pressure sensor **728** may include at least one pressure sensor which may sense a pressure of incoming water. In some embodiments, the inlet pressure sensor **728** may be paired with a sampling port or septum from which fluid may be extracted from the fluid circuit **710** for testing. From the inlet pressure sensor **728**, water may flow to a divert manifold **730**. The divert manifold **730** may allow the system **10** to divert water to the drain **726** in the event that water production at the medical water production device **14** exceeds current system **10** demand. Additionally, the divert manifold **730** may allow water which is measured to be outside of predefined sensing thresholds to be directed to drain **726**. Water exiting the divert manifold **730** may flow to a pump **732** which may be operated to adjust the pressure of the water if needed. The control system **15** may check the reading from the inlet pressure sensor **728** prior to running the pump **732**. For example, the control system **15** may verify that the inlet pressure is positive or positive beyond some threshold before running the pump **732**. This may ensure that the pump **732** has water to pump before powering the pump **732**. From the pump **732** water may proceed to an inlet manifold **734**. In some embodiments, the pump **732** may include a bypass which allows fluid to recirculate to the pump **732** in the event that pressure downstream of the pump **732** is at a desired value. The inlet manifold **734** may include an additional conductivity sensor **736** which may again check that the conductivity of the water is within predefined limits. A pressure sensor **738** may also be included in the inlet manifold **734** and may provide feedback for a control loop used by the control system **15** to inform operation of the pump **732**. The inlet manifold **734** may include a sampling port or septum in some examples.

From the inlet manifold **734**, water may pass to a mixing circuit **348** of the fluid circuit **710**. The mixing circuit **348** may include a number of flow pathways. For example, the mixing circuit **348** may include a WFI water pathway and at least one constituent pathway. The number of flow pathways in the mixing circuit **348** may depend on the type of solution being mixed or the types of solutions which the system **10** supports generation of. In certain embodiments, a flow path may be included for each constituent component of the solution. The exemplary system **10** is shown as a saline generating circuit and includes a saline flow path and a WFI water flow path.

With respect to the saline flow path, in the example embodiment, the mixing circuit **348** may include a crystalline constituent container **740**. The crystalline constituent container **740** may be filled with sodium chloride. Other

crystalline constituents may be used in other embodiments (e.g. sugar where D5NS or dialysate is produced). Fluid may enter the crystalline constituent container and pass through the sodium chloride contained therein to dissolve an amount of the sodium chloride. In various examples, fluid leaving the crystalline constituent container **740** may be saturated or near saturated. In some embodiments, the crystalline constituent container may also act as a reservoir **740** which may maintain a volume of solution therein. This may allow the system **10** to easily accommodate periods of high fluid demand. Fluid exiting the crystalline constituent container **740** may then pass through at least one filter. For example, a coarse filter may be included to help ensure the granular constituent does not exit the crystalline constituent container **740**. In the example an ultrafilter **742** is also shown downstream of the crystalline constituent container **740**. At least one conductivity sensor **744** may collect data on the concentration of sodium chloride in the fluid leaving the ultrafilter **742**.

As shown, fluid leaving the inlet manifold **734** may also flow along a second WFI water flow path in FIG. **204**. The second path may include a second ultrafilter **746**. The saline fluid and water from the second path may be combined together in a mixing manifold **748**. To generate a solution of the appropriate concentration, flow controllers **750**A, B may be included in the fluid circuit **710**. The flow controller **750**A, B may meter volumes of fluid and control flow rates of fluid passing therethrough. The control system **15** of the system **10** may use data from the conductivity sensor **744** in the saline flow path to determine mixing ratios that may be executed via commands to the flow controllers **750**A, B. Thus, the control system **15** may combine fluid from the saline flow path and WM water flow path to achieve a solution of a target concentration such as 0.9% saline, in some embodiments, the mixing manifold **748** may be replaced by a mixing tank which may maintain a volume of fluid to help accommodate periods of increased demand.

The fluid may exit the mixing manifold **748** and travel along a tortuous and/or relatively long flow path to encourage mixing. The fluid may then pass a set of redundant conductivity sensors **752**A, **752**B, These conductivity sensors **752**A, B may collect data on the conductivity of the solution leaving the mixing circuit **348** and the control system **15** may ensure that the conductivity is as expected for the solution that the system **10** is generating. From the conductivity sensors **752**A, B the solution may pass to a particulate sensor **754** and a dispensing nozzle **756**. The particulate sensor **754** is shown as feeding from a slip stream in FIG. **204**. However in other embodiments, the particulate sensor **754** may be in line and upstream of the dispensing nozzle **756**. The control system **15** may monitor data from the particulate counter to check that the generated fluid conforms to a predefined, particulate limit. Fluid leaving the particulate counter may pass to the drain **726**. If fluid is deemed to be acceptable, fluid may pass to the dispensing nozzle **756** and may be used to fill bags **26**. Alternatively, if fluid is found unacceptable, fluid may be dispensed from the dispensing nozzle **756** into a drain (see, e.g. drain inlet **434** of FIG. **71**A) and may be followed by a flush volume of solution.

Referring now to FIG. **205**, an example embodiment of a mixing circuit **348** is depicted. The inlet manifold **734** shown in FIG. **204** is included as part of the mixing circuit **348** shown in FIG. **205**. As shown, the mixing circuit **348** may receive fluid from a purified water inlet **1400**. The purified water inlet **1400** may receive purified water from an output of a medical water production device **14**. In some embodiments, one or more intermediate component (see, e.g., FIG. **204**) may be included between the medical water production device **14** and the purified water inlet **1400**. For example, at least one sensor (e.g. a TOC monitor **724**) and/or a divert valve of divert manifold **730** may be included between the medical water production device **14** and the purified water inlet **1400**.

Purified water may pass from the purified water inlet **1400** to a heater **1402**. The heater **1402** may adjust the temperature of incoming water to a temperature within a predetermined range. In some embodiments, the heater **1402** may only be used in certain operational modes. For instance, the heater **1402** may only be utilized to adjust water temperature to at least a target set point during hot water disinfection of the mixing circuit **348**. During a hot water disinfect, hot water (e.g. purified water at 80° C.) may be delivered through the various flow paths of the mixing circuit for a period of time (e.g. 20-60 minutes, in some specific examples 30 minutes).

From the heater **1402**, water may pass to a flow sensor **1404** and a pressure sensor **1406**. The flow sensor **1404** and pressure sensor **1406** may collect data used by the control system **15** to ensure that the pressure and flow of fluid into the mixing circuit **348** conform to expected values. A shutoff valve **1408** may be included downstream of the flow sensor **1404** and pressure sensor **1406** and allow flow through the mixing circuit **348** to be blocked off in the event that the control system **15** senses an error condition or fault. Downstream of the shutoff valve **1408**, may be a purified water conductivity sensor **1410**. The conductivity sensor **1410** may be an ultrapure water conductivity sensor optimized for sensing of low conductivity solutions.

In the example embodiment, the mixing circuit **348** is arranged to generate a saline solution. Fluid may flow from the purified water conductivity sensor **1410** to a saline portion **1414** of the mixing circuit **348** or a purified water portion **1412** of the mixing circuit **348**. Alternative embodiments may include different or additional circuit portions. For example, in some embodiments, the mixing circuit **348** may include a dextrose portion of the mixing circuit **348** instead of or in addition (e.g. where D5NS is generated by the mixing circuit **348**) to the saline portion **1414**. The mixing circuit **348** may include a circuit portion for each constituent used to create a target end product.

The purified water portion **1412** of the mixing circuit **348** may include an ultrafilter **1416**. The ultrafilter **1416** may serve to further purify or provide a redundant purification element which may ensure that the microbial and pyrogen content of the water is below prescribed values. One or more sensor **1415**, **1417** may be included in the purified water portion **1412** of the mixing circuit. For example, one sensor **1415** may detect the presence of the ultrafilter **1416**. Sensor **1415** may be a magnetic sensor which senses the presence of a metal body in the ultrafilter **1416**. Any other suitable sensor may be used (e.g. optical, microswitch, etc.). Another of the sensors **1417** may sense the state of a lock **1413** which may engage the ultrafilter **1416** and lock the ultrafilter **1416** in place within the mixing circuit **348**. Sensor **1417** may be a magnetic (e.g. Hall effect) sensor monitoring the location of a metal body on the lock **1413**. Any other suitable sensor (e.g. optical, microswitch, etc.) may be used in other embodiments. The control system **15** may prohibit operation of the mixing circuit **348** in the event that the sensors **1415**, **1417** indicate the ultrafilter **1416** is absent or is not locked into place.

The purified water portion **1412** of the mixing circuit **348** may also include a pressure sensor **1418** which may be disposed downstream of the ultrafilter **1416**. The pressure

sensor **1418** may collect data on fluid exiting the ultrafilter **1416**. This data may be compared, via control system **15**, to data from the pressure sensor **1406** to ensure that a pressure drop across the ultrafilter **1416** is within an expected range. The control system **15** may generate an error and toggle the shutoff valve **1408** in the event that the pressure drop falls outside of the expected range. In some examples, a user perceptible indication (e.g. text, image, animation, a combination thereof, etc. on a user interface) may also be generated by the control system **15** instructing the user to preform maintenance (e.g. replace the ultrafilter **1416**). The control system **15** may also generate an indication if the control system **15** detects that the ultrafilter **1416** is not installed or not installed correctly. A purified water outlet valve **1444** may also be included in the purified water portion **1412**. The purified water outlet valve **1444** may be a proportional valve in certain examples.

The saline portion **1414** of the mixing circuit **348** may be separated from the purified water conductivity sensor **1410** by a check valve **1420**. The check valve **1420** may ensure that saline solution may not back flow out of the saline portion **1414** of the mixing circuit **348** into sections of the mixing circuit **348** intended to contain purified water. Downstream of the check valve **1420**, the saline portion **1414** may include a constituent disposable inlet receptacle **1422**, constituent disposable **1424**, and a constituent disposable outlet receptacle **1426**. An inlet of the constituent disposable **1424** may seal in place within the constituent disposable inlet receptacle **1422** and an outlet of the constituent disposable **1424** may seal in place within the constituent disposable outlet receptacle **1426**. An example constituent disposable **1424** is further described in relation to FIGS. **207-208**. As purified water flows into the disposable inlet receptacle **1422** and through the constituent disposable **1424**, crystalline constituent contained in the constituent disposable **1424** may dissolve into the purified water. The fluid exiting the constituent disposable outlet receptacle **1426** may be a liquid concentrate which is saturated or nearly saturated. The liquid concentrate may be saline solution in various embodiments. In other examples, liquid concentrate could be, though is not limited to being, a sugar solution.

As shown, the mixing circuit **348** may also be outfitted with a set of drain ports **1430**A, B. The drain ports **1430**A, B may communicate with a respective one of the constituent disposable inlet receptacle **1422** and constituent disposable outlet receptacle **1426** as well as a drain destination for the system **10**. The drain ports **1430**A, B may allow for venting of gas from the mixing circuit **348** (e.g. upon installation and priming of a new constituent disposable **1424**).

The constituent disposable inlet receptacle **1422**, constituent disposable **1424**, and a constituent disposable outlet receptacle **1426** may be placed between a set of bypass valves **1428**A, B which may be actuated to redirect flow around the constituent disposable **1424** and through a disinfection flow path **1432** in certain scenarios. For example, the bypass valves **1428**A, B may be actuated during hot water disinfection of the mixing circuit **348**. This may prevent constituent in the constituent disposable **1424** from being consumed during disinfection of sections of the mixing circuit **348**.

In some examples, a second disinfection flow path **1434** may be included. The second disinfection flow path **1434** may extend from the constituent disposable inlet receptacle **1422** to the constituent disposable outlet receptacle **1426**. In embodiments including a second disinfection flow path **1434**, the constituent disposable **1424** may have a partially installed position and a fully installed position. In the fully installed position, the constituent disposable **1424** may prevent flow through the second disinfection flow path **1434**. In the partially installed position, fluid may be blocked from entering the constituent disposable **1424** and may instead flow through the second disinfection flow path **1434**. As this occurs, the fluid may contact portions of an inlet and outlet (see, e.g. FIG. **208**) of the constituent disposable **1424**. Thus, upon partial installation of a new constituent disposable **1422**, hot water may be passed through the second disinfection flow path **1434** to disinfect the inlet and outlet of the constituent disposable **1424** before use. The constituent disposable **1422** may be advanced to the fully installed position after such a disinfection occurs. The drain ports **1430**A, B may allow fluid in the constituent disposable inlet receptacle **1422** and constituent disposable outlet receptacle **1426** a place to displace as a constituent disposable **1424** is advanced to the fully installed position.

As shown, the saline portion **1414** of the mixing circuit **348** may also include an ultrafilter **1436**. The ultrafilter **1436** may serve to further purify or provide a redundant purification element which may ensure that the microbial and pyrogen content of the saline solution is below prescribed values. One or more sensor **1435**, **1437** may be included in the saline portion **1414** of the mixing circuit **348**. For example, one sensor **1435** may detect the presence of the ultrafilter **1436**. Sensor **1435** may be a magnetic sensor which senses the presence of a metal body in the ultrafilter **1436**. Any other suitable sensor may be used (e.g. optical, microswitch, etc.). Another of the sensors **1437** may sense the state of a lock **1433** which may engage the ultrafilter **1436** and lock the ultrafilter **1436** in place within the mixing circuit **348**. Sensor **1437** may be a magnetic (e.g. Hall effect) sensor monitoring the location of a metal body on the lock **1433**. Any other suitable sensor (e.g. optical, microswitch, etc.) may be used in other embodiments. The control system **15** may prohibit operation of the mixing circuit **348** in the event that the sensors **1435**, **1437** indicate the ultrafilter **1436** is absent or is not locked into place.

The saline portion **1414** of the mixing circuit **348** may also include a pressure sensor **1438** which may be disposed downstream of the ultrafilter **1436**. The pressure sensor **1438** may collect data on fluid exiting the ultrafilter **1436**. This data may be compared, via control system **15**, to data from the pressure sensor **1406** to ensure that a pressure drop across the ultrafilter **1436** is within an expected range. The control system **15** may generate an error and toggle the shutoff valve **1408** in the event that the pressure drop falls outside of the expected range. In some examples, a use perceptible indication (e.g. text, image, animation, a combination thereof, etc. on a user interface) may also be generated by the control system **15** instructing the user to preform maintenance (e.g. replace the ultrafilter **1436**). The control system **15** may also generate an indication if the control system **15** detects that the ultrafilter **1436** is not installed or incorrectly installed.

A saline outlet valve **1440** and a saline solution conductivity sensor **1442** may also be included in the saline portion **1414**. The saline outlet valve **1440** may be a proportional valve in certain examples. As the saline concentration in the saline portion **1414** downstream of the constituent disposable **1424** may be relatively consistent, the saline solution conductivity sensor **1442** may be placed upstream or downstream of the saline outlet valve **1440**.

Fluid exiting the purified water portion **1412** and saline portion **1414** may be passed to a mixing portion **1446** of the mixing circuit **348**. The purified water outlet valve **1444** and saline outlet valve **1440** may be operated by the control

system **15** to adjust the ratio of purified water from the purified water portion **1412** and saline from the saline portion **1414** which is passed to the mixing portion **1446**. The valves **1440**, **1444** may be operated to ensure that the ratio is controlled to generate a target end product (e.g. 0.9% saline). The mixing path **1446** may include at least one of a mixing chamber, tortuous path, baffle, etc. to encourage thorough mixing of the saline concentrate and purified water. An example mixing path **1446** is described in relation to FIG. **206**.

The control system **15** may adjust operation of the valves **1440**, **1444** based on feedback from at least one of the saline solution conductivity sensor **1442** and a first and second mixture conductivity sensor **1448**A, B downstream of the mixing portion **1446**. After passing the mixture conductivity sensors **1448**A, B, fluid may exit an outlet **1450** of the mixing circuit **348**. In some embodiments, the outlet **1450** may be a quick connect fitting which may couple with a complimentary fitting on an end of a fluid supply set (further described in relation to FIG. **112**). The fluid supply set may include a dispensing nozzle **1910** (see, e.g., FIG. **167**) though which fluid may be delivered into a reservoir such as a bag **26**. In some examples a 0.2 micron filter **1642** (see, e.g., FIG. **112**) may be disposed between the outlet **1450** and the dispensing nozzle **1910**.

The first and second mixture conductivity sensors **1448**A, B may also be monitored by the control system **15** to determine that the mixture is well mixed and to ensure that both of the mixture conductivity sensors **1448**A, B are functioning properly.

Referring now to FIG. **206**, an example embodiment of a mixing portion **1446** of a mixing circuit **348** is shown. The mixing portion **1446** may be included in a manifold **1520** which includes various components and flow paths of the mixing circuit **348**. The example view shown in FIG. **206** is a portion of a cross-section of a manifold **1520** of the mixing circuit **348** which is taken though a portion of the manifold **1520** including the mixing path **1446**.

As shown, the mixing path **1446** may include an inlet region **1570**. The mixing path **1446** may also include an intermediate region **1574** which may connect the inlet region **1570** to an outlet region **1576** of the mixing path **1446**. The inlet region **1570** may be a wide bay-like region of the mixing path **1446**. The inlet region **1570** may receive fluid from a purified water outlet channel **1572** and saline concentrate outlet channel (not shown) which place the valves **1440**, **1444** (see, e.g., FIG. **205**) into fluid communication with the mixing portion **1446** of the mixing circuit **348**. The concentrate outlet channel may be disposed opposite the purified water outlet channel **1572** and in the portion of the manifold **1520** which has been cut away in FIG. **206**. The inlet region **1570** may narrow as proximity to the intermediate region **1574** increases. The intermediate region **1574** may extend at a sharp (e.g. right) angle with respect to at least one wall of the inlet region **1570**. The mixing path outlet **1576** may be a sensing well which is in communication with sensing components on at least one of the mixture conductivity sensors **1448**A, B (see, e.g., FIG. **205**).

A majority of the mixing which takes place in the mixing path **1446** may occur in the inlet region **1570** as the purified water and concentrate streams meet. Additional mixing may occur in the intermediate region **1574**. The intermediate region **1574** may establish a tortuous path which encourages turbulent flow of fluid within the intermediate region **1574**. This turbulent flow may aid in ensuring that fluid transferred through the mixing path **1446** is consistently well mixed. As shown, the intermediate region **1574** may include a series of baffles **1578**. The baffles **1578** may furcate the mixing path **1446** into sets of separate furcated channels **1580**A, B which reconverge into common flow channels **1582** in the spaces between the baffles **1578**. In the example embodiment, the baffles **1578** have a diamond shaped cross-section. Thus, the furcated channels **1580**A, B may each be divided into diverging portions and converging portions. As fluid flows along the mixing path **1446** the flow may split and diverge as it reaches each baffle **1578**. Some turbulence may be engendered as the flow is split. In the example, the baffles **1578** furcate the flow such that the furcated channels **1580**A, B extend at about 45° from the common flow channels **1582**. The furcated channels **1580**A, B may include a bend **1584** which redirects the flow toward the common channels **1582** between the baffles **1578**. In the example embodiments, the bends **1584** each impose a sharp (e.g. about a 90° degree) redirection of flow along each of the furcated channels **1580**A, B. The bend **1584** may be centrally located in each of the furcated channels **1580**A, B. The furcated channels **1580**A, B may reconverge into common channels **1582** extending between the baffles **1578** at about 45° angles.

In other embodiments, the angles may be adjusted from those shown in FIG. **206** by altering the shape of the baffles **1578**. Similarly, the number of bends **1584** in each furcated channel **1580**A, B may be altered by adjusting the cross-sectional shape of the baffles **1578**. In certain embodiments, the baffles **1578** may have different cross-sectional shapes and may not necessarily be polygonal in cross-section (e.g. may be round shapes or may include rounded regions or curves). Some baffles **1578** may have a first cross-sectional shape while other baffles **1578** in the mixing path **1446** may have a second cross-sectional shapes (still other baffles **1578** may include third, fourth, and so on cross-sectional shapes).

The sharp redirection of flow at the bends **1584** of each furcated channel **1580**A, B may generate turbulence as fluid flows along the mixing path **1446**. Additionally, the rejoining of the furcated streams into common flow paths **1582** downstream of each baffle **1578** may cause turbulence. This turbulence may aid in ensuring that purified water and saline streams entering the mixing path **1446** via the valves **1440**, **1444** (see FIG. **205**) are uniformly and consistently mixed together before passing to the mixing path outlet **1576**. As shown, flow entering the outlet portion **1576** from the intermediate portion **1574** is provided from the reconverging portion of furcated flow channels **1580**A, B created by the baffle **1578** most proximal the outlet portion **1576**. This may help to encourage still further mixing of fluid within the sensing well formed by the outlet portion **1576**.

Referring now to FIGS. **207-208**, an exemplary constituent cartridge or constituent disposable **1424** is depicted. The constituent disposable may be a bulk reservoir of constituent which may be used by the system **10** to generate a desired solution or solutions. The constituent disposable **1424** may include a housing **1460** and may be in the form of a canister. The housing **1460** may include a first end portion **1462** and a second end portion **1464**. A side wall portion **1466** may be captured between the first and second end portions **1462**, **1464**. The end portions **1462**, **1464** may be threaded, welded, bonded, or otherwise coupled to the opposing ends of the side wall portion **1466**. Alternatively, a number of rods **1463** may extend between the end portions **1462**, **1464** to couple the end portions **1462**, **1464** together and sandwich the side wall portion **1466** therebetween. Together, the first and second end portions **1462**, **1464** and the side wall portion **1466** may define a sealed interior volume. In the example embodiment, the housing **1460** has a round elongate shape which extends along a longitudinal axis of the

constituent disposable **1424**. In certain examples, the housing **1460** may be roughly cylindrical. The housing **1460** may have other shapes in alternative embodiments.

The interior volume may be at least partially filled with a solid (e.g. powdered, lyophilized, crystalline) constituent. Any desired constituent may be used and the constituent included in the constituent disposable **1424** may depend on the solution to be generated. The example embodiment is described in the context of sodium chloride solution generation, though the disclosure is not limited thereto. In other embodiments, the constituent may be, but is not limited to, crystalline sugars (e.g. dextrose), other salts (e.g. KCl, $CaCl_2$), Sodium Lactate, etc.), powdered drug (e.g. powdered antibiotic), etc. As the constituent disposable **1424** is used, the amount of solid constituent in the constituent disposable **1424** may deplete and eventually may be exhausted. Once a constituent disposable **1424** is emptied of constituent, the constituent disposable **1424** may be discarded and a new constituent disposable **1424** may be installed. In alterative examples, the constituent disposable **1424** may be returned to a manufacturer for cleaning, refilling, and sterilization.

The first end portion **1462** may include a coupling interface **1485** such as a receiving shoe allowing the constituent disposable **1424** to mate onto an actuator assembly of the system **10**. The first end portion **1462** may also include an inlet port **1468** and an outlet port **1470**. The inlet port **1468** and outlet port **1470** may extend from a main section **1471** of the first end portion **1462** along a plane which is perpendicular to the longitudinal axis of the constituent disposable **1424**. In certain examples, the inlet port **1468** and the outlet port **1470** may extend parallel to one another. The inlet port **1468** and the outlet port **1470** may be in fluid communication with the interior volume of the constituent disposable **1424** respectively via an inlet flow path **1472** and an outlet flow path **1474**.

As shown, a conduit **1476** may be coupled to the inlet flow path **1472**. The conduit **1476** may extend through the interior volume of the constituent disposable **1424** to a point in the interior volume opposite the first end portion **1462**. In the example embodiment, the conduit **1476** extends to a depression **1478** formed in the second end portion **1464** of the housing **1460**. In the example embodiments, the depression **1478** is bowl like in shape and includes a central region **1480** where the depression **1478** is deepest. The outlet **1484** of the conduit **1476** may be positioned at the central region **1480** of the depression **1478**. The conduit **1476** may direct purified water entering the constituent disposable **1424** through the inlet **1468** to a point at the bottom of the solid constituent (shown as dense stippling in FIG. **208**). Thus, fluid may be required to pass though substantially the entire column of solid constituent in order to reach the outlet flow path **1474** of the constituent disposable **1424**. This may help to ensure that the solution (shown as the less dense stippling in FIG. **208**) is maximally saturated prior to exiting the constituent disposable **1424**. Additionally, this may help to ensure that constituent in a constituent disposable **1424** is fully consumed over the life of the constituent disposable **1424**. Directing the incoming fluid to a point opposite the outlet flow path **1474** may also aid in ensuring that the solution output from the constituent disposable **1424** is of relatively consistent concentration regardless of the amount of solid constituent remaining in the constituent disposable **1424**.

The outlet **1484** of the conduit **1476** may include a number of side ports **1482**. The side ports **1482** may help to prevent pocketing of solid constituent in various parts of the constituent disposable **1424** particularly as the amount constituent in the constituent disposable **1424** is low. This may help to ensure that the supply of solid constituent within the constituent disposable **1424** is able to be completely consumed before a replacement constituent disposable **1424** is needed.

As shown, a filter element **1486** may separate the interior volume of the constituent disposable **1424** from the outlet flow path **1474**. The filter element **1486** may, for example, thread (as shown), snap fit, be solvent bonded, be coupled via adhesive, etc. into a receptacle **1488** defined in the first end portion **1462**. The filter element **1486** may be a particulate filter which inhibits passage of undissolved solids from the interior volume into the outlet flow path **1474**. The first end portion **1462** may also include a blow off port **1490**. The blow off port **1490** may receive a relief valve **1492** which may allow fluid to exit the constituent disposable **1424** in the event that the constituent disposable **1424** becomes over pressurized.

Referring now to FIGS. **209-210**, an example inlet port **1468** is depicted. Though an inlet port **1468** is shown in FIGS. **209-210**, outlet ports **1470** may be constructed in the same manner. As shown, the inlet port **1468** may include a port body **1496**. The port body **1496** may include a bore **1498** which extends through the port body **1496** substantially along a longitudinal axis of the port body **1496**.

A first end **1500** of the port body **1496** may include a mating interface **1502**. The mating interface **1502** may engage with a cooperating mating interface included in the first end portion **1462** of the constituent disposable **1424**. In the example embodiment, the mating interface **1502** is a threaded interface. Any other suitable mating interface **1502** such as, but not limited to, a bayonet mount, press fit, etc. may be used. In alternative embodiments, the inlet port **1468** may be formed integral with the first end portion **1462** or fixedly coupled into place via welding, solvent bonding, etc.

A cover **1504** may be coupled to and may seal over a second end **1506** of the port body **1496**. When a constituent disposable **1424** is fully assembled, the cover **1504** on the inlet and outlet ports **1468**, **1470** may provide a barrier which keeps the interior volume of the constituent disposable **1424** out of communication with the surrounding environment. Thus, the cover **1504** may establish a sterility barrier. The barrier formed by the cover **1504** may be an interruptible barrier which may, for instance, be puncturable to gain access to the interior volume of a constituent disposable **1424**. The cover **1504** may for example be constructed of one or some combination of foil, foam, and/or plastic. The cover **1504** may be attached to the second end **1506** of the port **1468** in any suitable manner. For example, the cover **1504** may be adhered via adhesive, may be heat staked, may be welded (e.g. ultrasonically), etc. The manner of attachment may be selected based on the material of the port body **1496** and the material(s) used to form the cover **1504**.

The port body **1496** may be tiered and may include a wide region **1508** and a narrow region **1510**. In the example embodiment, the wide region **1508** has a diameter which is greater than that of the narrow region **1510**. The wide region **1508** may be adjacent to the first end **1500** of the port body **1496** and may be the portion of the port body **1496** most proximal to the main section **1471** (see, e.g. FIG. **207**) of the first end portion **1462**. The narrow region **1510** may be adjacent the second end **1506** of the port body **1496** and may form the portion of the port body **1496** most distal to the main section **1471** of the first end portion **1462**. There may be a tapered region **1516** intermediate the wide region **1508** and narrow region **1510**, though in other embodiments, a

step wise change in width may be present between the wide region **1508** and narrow region **1510**. Additionally, in some examples the narrow region **1510** may include a tapered segment **1518** adjacent the second end **1506** which narrows as distance to the second end **1506** decreases.

Each of the wide region **1508** and narrow region **1510** may include a recess **1512** formed in the exterior side wall of the port body **1496**. The recesses **1512** may be provided in sections of the wide region **1508** and narrow region **1510** most proximal to the second end **1506** of the port body **1496**. A gasket member **1514** may be placed in each of the recesses **1512**. In the example embodiment, an o-ring is seated in each of the recesses **1512**. In alternative embodiments, over molded compliant members may be used in place of the recesses **1512** and gasket member **1514**.

Referring now also to FIG. **211**, an inlet port **1468** of a constituent disposable **1424** and an inlet receptacle **1422** of a mixing circuit **348** (see, e.g., FIG. **205**) are depicted. The inlet receptacle **1422** is shown for sake of brevity. It should be understood that the outlet receptacle **1426** may be constructed in the same manner and include the same features as the inlet receptacle **1422**. As shown in FIG. **211**, the inlet receptacle **1442** may be included as part of a manifold **1520** which may include various components of a mixing circuit **348**. The inlet receptacle **1422** may define a cavity in the manifold **1520** which is sized to accept the inlet port **1468**. Similarly to the inlet port **1468**, the inlet receptacle **1422** may include a wide region **1530** and a narrow region **1532**. The inlet receptacle **1422** may include an open end **1522** through which an inlet port **1468** may be advanced into the inlet receptacle **1422**. The open end **1522** may include a taper which may cooperate with the tapered section **1518** of the inlet port **1468** to aid in guiding the inlet port **1468** into the inlet receptacle **1422**. The inlet receptacle **1422** additionally may include a piercing member **1524**. The piercing member **1524** may be disposed at an end of the inlet receptacle **1422** opposite the open end **1522**. A flow lumen **1526** may extend through the piercing member **1524** and may place the inlet receptacle **1422** into fluid communication with a manifold flow path **1528** which extends away from the inlet receptacle **1422**. This manifold flow path **1528** may, for example, extend to a bypass valve **1428**A (see, e.g., FIG. **205**). Any suitable piercing member **1524** may be included. In the example embodiment, the piercing member **1524** includes an angled piercing end. In other embodiments, the piercing member **1524**, may for example include a conical piercing end. A drain port **1430**A may also be provided and may be in communication with the inlet receptacle **1422**.

Referring now also to FIG. **212**, upon installation of a new constituent disposable **1424**, the inlet port **1468** of the constituent disposable **1424** may be displaced a first distance into the inlet receptacle **1422** to a partially installed position. The outlet port **1470** would similarly be displaced into the outlet receptacle **1426** to a partially installed position at the same time. As shown in FIG. **212**, in the partially installed position, the gasket element **1514** of the wide region **1508** of the port body **1496** may be compressed between the port body **1496** and the surface of the wide region **1530** of the inlet receptacle **1422**. This may form a fluid tight seal between the inlet port **1468** and the inlet receptacle **1422** and serve to plug the open end **1522** of the inlet receptacle **1422**. The inlet port **1468** may, however, be spaced from the piercing member **1524** such that the cover **1504** of the inlet port **1468** remains intact. Thus, with the inlet port **1468** in the partially installed position, fluid introduced into the inlet receptacle **1422** may be prevented from spilling out of the open end **1522** of the inlet receptacle **1422** and blocked from passing to the interior of the constituent disposable **1424** by the cover **1504**. The partially installed position may also be referred to herein as an unspiked position.

A portion of the second disinfection flow path **1434** is visible in FIG. **212**. The second disinfection flow path **1434** may connect the inlet receptacle **1422** and the outlet receptacle **1426** (see, e.g., FIG. **205**). With the constituent disposable **1424** in the partially installed position, fluid delivered to the inlet receptacle **1422** through the flow lumen **1526** of the piercing member **1524** may flow through the second disinfection flow path **1434** to the outlet receptacle **1426**. This fluid may then exit the outlet receptacle **1426** through the flow lumen **1526** in the piercing member **1524** of the outlet receptacle **1426**. Each time a new constituent disposable **1424** is installed, the constituent disposable **1424** may be placed in the partially installed position. The control system **15** may then command passing of hot fluid through the inlet receptacle **1422**, the second disinfection flow path **1434**, and the outlet receptacle **1426** for a period of time. As shown, there may be a space between the narrow region **1510** of the port body **1496** and the wall of the inlet receptacle **1422** which may allow the hot fluid to contact the entire exterior surface of the narrow region **1510** (and the intermediate taper region **1516** in the example embodiment) of the port body **1496**. Thus, when the constituent disposable **1424** is in the partially installed position, hot water may be used to disinfect the inlet and outlet ports **1468**, **1470** of the constituent disposable **1424**. The control system **15** may command flow hot water over the inlet and outlet ports **1468**, **1470** for a predetermined period of time which may be selected based at least in part on the temperature of the hot water. In some embodiments, purified water at 60-95° C. (e.g. 80° C.) may be provided for 20-60 minutes (e.g. 30 minutes).

Referring now to FIG. **213**, once disinfection of the inlet and outlet ports **1468**, **1470** is completed, the constituent disposable **1424** may be displaced such that the inlet and outlet ports **1486**, **1470** are advanced to a fully installed position within the respective inlet receptacle **1422** and outlet receptacle **1426**. The inlet port **1468** is shown in the fully installed position in the inlet receptacle **1422** in FIG. **213**. The outlet port **1470** may be in the same position in the outlet receptacle **1426** when in the fully installed position. As shown, in the fully installed position, the inlet port **1468** may contact the wall of the inlet receptacle **1422** from which the piercing member **1524** extends. The piercing member **1524** may puncture through a frangible region of the cover **1504** of the inlet port **1468** such that the flow lumen **1526** of the piercing member **1524** establishes fluid communication with the interior volume of the constituent disposable **1424**. The inlet port **1468** and outlet port **1470** may be considered to be in a spiked state once in the fully installed position and punctured by the piercing members **1524**. Thus, the fully installed position may be referred to herein as a spiked position. Once the inlet and outlet port **1468**, **1470** are in the spiked state, fluid passing from the inlet receptacle **1422** to the outlet receptacle **1426** may be directed through the constituent disposable **1424** as described in relation to FIGS. **207-208**. The gasket member **1514** of the narrow region **1510** of the port body **1496** may be compressed between the port body **1496** and the narrow region **1532** of the inlet receptacle **1422** so as to form a fluid tight seal. Thus, the second disinfection flow path **1434** may be sealed out of communication with the flow lumen **1526** of the piercing member **1524**. This may prevent saline leaving the outlet

1470 of the constituent disposable 1424 from passing back to the inlet receptacle 1422 of the manifold 1520.

As a portion of the inlet receptacle 1422 and outlet receptacle 1426 become filled with fluid during disinfection of the partially installed inlet and outlet ports 1468, 1470, advancement of the inlet and outlet ports 1468, 1470 to the fully installed state may displace fluid. The drain ports 1430A, B may allow this fluid to displace along a drain conduit (not shown) to a drain destination in the system 10. In other embodiments, at least a portion of the inlet and outlet receptacles 1422, 1426 may include an at least partially displaceable wall. Such a wall may, for instance, be formed of or include a region of diaphragm material. The diaphragm material may displace or stretch to accommodate the displaced fluid. The piercing member 1524 may, for example, be mounted in a diaphragm body which may displace or include displaceable regions which move to accommodate the displaced fluid.

Referring now to FIG. 214, an example actuation assembly 1540 for a constituent disposable 1424 is shown. As shown, the actuation assembly 1540 may include a carriage assembly 1542 which may displace along a set of guide rails 1544. The guide rails 1544 may extend parallel to one another and through respective slide bearings 1546 included in the carriage assembly 1542. The carriage assembly 1542 may also include a mating interface 1548 to which the constituent disposable 1424 may be mounted. As shown, the mating interface 1548 includes mating block 1550 which may be docked within the coupling interface 1485 of the constituent disposable 1424. The mating interface 1548 may also include a lock assembly 1552. In the example embodiment, the lock assembly 1552 is depicted as a cam lock. The lock assembly 1552 may be actuated (e.g. manually via handle 1551) so as lock the constituent disposable 1424 in place on the mating interface 1548.

The actuation assembly 1540 may also include at least one sensor 1553, 1556, 1559. Sensor 1553 may be a lock assembly 1552 state sensor. This sensor 1553 may monitor the lock assembly 1552 and output a data signal to the control system 15 indicative of whether the lock assembly 1552 is in an open state or a locked state. Sensor 1553 may, for example, be a magnetic sensor which provides an output signal that changes as the position of a metal body 1547 on the mating interface 1548 is altered. Any other suitable sensor type may be used as well. For example, some embodiments may use a microswitch which is depressed when the lock assembly is in a locked state (or unlocked state). Other embodiments may include a potentiometer which changes resistance as the lock assembly transitions between the locked state and the unlocked state. An optical sensor could also be used in some examples. It should be understood that these sensor types are merely illustrative and other sensing arrangements could be used.

Sensor 1556 may be a constituent disposable presence sensor. The disposable presence sensor 1556 may generate a signal indicative of whether a constituent disposable 1424 is in place on the mating block 1550. The disposable presence sensor 1556 may be a magnetic sensor which may monitor the location of a metal body 1555 (see, e.g., FIG. 207) included on the constituent disposable 1424. Any other suitable sensor type may be used in alternative embodiments. For example, an optical sensor (e.g. beam break sensor) may be used and the metal body 1555 could then be omitted. Again, it should be understood that these sensor types are merely illustrative and other sensing arrangements could be used.

The actuation assembly 1540 may include an actuator 1554. The actuator 1554 may be powered, under direction of the control system 15, to translationally displace the carriage assembly 1542 along the guide rails 1544. When a constituent disposable 1424 is coupled to the carriage assembly 1542, the inlet port 1468 and outlet port 1470 of the constituent disposable 1424 may be aligned with the inlet receptacle 1422 and outlet receptacle 1426 of the mixing circuit 348 (see, e.g., FIG. 205). Displacement of the carriage assembly 1542 along the guide rails 1544 may drive the inlet port 1468 and outlet port 1470 into and out of the inlet port receptacle 1422 and outlet port receptacle 1426 of the manifold 1520.

The actuation assembly 1540 may include at least one position sensor which monitors the displacement of the carriage assembly 1542 along the guide rails 1544. Any suitable position sensor may be used. For example, a linear potentiometer which changes resistance in relation to the location of the carriage assembly 1542 along the guide rails 1544 may be used. In other embodiments, the actuator motor 1543 may include a built in encoder which may be used as the position sensor or may provide a second redundant position sensor. The control system 15 may govern operation of the actuator 1554 based on position data sensed by the position sensor. Thus, the actuator 1554 may be powered by the control system 15 to displace the constituent disposable 1424 into desired position such as a partially installed position (see, e.g., FIG. 212) and into a fully installed position (see, e.g., FIG. 213). Additionally, the actuator 1554 may displace the constituent disposable 1424 out of engagement with the inlet receptacle 1422 and outlet receptacle 1426 once the supply of constituent in the constituent disposable 1424 has been consumed. The actuator motor 1543 may be a stepper motor in certain examples. The actuator motor 1543 may also include a brake which may be engaged when the actuator motor 1543 is unpowered. The brake may prevent pressure in the constituent disposable 1424 and manifold 1520 from forcing the constituent disposable 1424 out of the inlet and outlet port receptacles 1422, 1426.

In some embodiments, a sensor assembly 1559 may be included to provide feedback when the carriage assembly 1542 is in a certain position along the guide rails 1544. This allows for the control system 15 to drive the carriage assembly 1542 to a home position which may be detected based on a change in the signal output by the sensor assembly 1559. The control system 15 may determine location of the carriage assembly 1542 based on encoder counts (e.g. from an encoder included in the motor assembly 1543) since the carriage assembly 1542 was detected to be in the home position by the sensor assembly 1559. The sensor assembly 1559 may include an optical sensor, magnetic sensor, inductive sensor, etc.

In some embodiments, the constituent disposable 1424 may include an identification tag 1558 (e.g. in place of metal body 1555). The identification tag 1558 may be or may store a unique identifier which is associated with the constituent disposable 1424 on which the identification tag 1558 is installed. For example, the identification tag 1558 may be a machine readable indicia. The identification tag 1558 may be an optically read identification tag 1558 such as barcode, data matrix, bokode, QR code, or the like. In other embodiments, the identification tag 1558 may be an RFID tag (active or passive, read-only or readable and writable). The actuation assembly 1540 may include an identification sensor 1560 which may read the identification tag 1558 on the constituent disposable 1424. The identification sensor 1560

may depend on the type of identification tag **1558** employed. For example, where a barcode is used, the identification sensor **1560** may be a barcode reader or imager. Where an RFID tag is used, the identification sensor **1560** may be an RFID interrogator. In alternative embodiments, the identification sensor **1560** may be included in a handheld reader such as a barcode scanning gun. In certain examples, the identification tag **1558** may store or encode additional information of interest for a particular constituent disposable **1424**. For instance, an identification tag **1558** may include lot number information, size information (where constituent disposables **1424** of different volumes are available), constituent type information (where constituent disposables **1424** filled with different constituents are available), dry weight, shelf life, manufacturing date, etc.

Each time a constituent disposable **1424** is installed on the actuation assembly **1540**, the control system **15** may analyze data received from the identification sensor **1560** to verify that the constituent disposable **1424** is acceptable for use. For example, the control system **15** may check the unique identifier of the constituent disposable **1424** against a list (e.g. database) of previously used unique identifiers. The control system **15** may inhibit use of a constituent disposable **1424** if it is determined that the unique identifier associated with the constituent disposable **1424** has already been used. The control system **15** may also check other information stored in the identification tag **1558** to ensure it is as expected. For example, the control system **15** may verify that a desired type of constituent is contained in the constituent disposable **1424** and inhibit use of the constituent disposable **1424** if the constituent type indicated in the identification tag **1558** does not match the desired constituent. Additionally, the control system **15** may check lot number and shelf life data stored on the identification tag **1558** against a database. In the event of an issue with a manufacturing lot of constituent disposables **1424**, the lot number may be flagged in the database and the control system **15** may then inhibit use of constituent disposables **1424** identified as belonging to any flagged lot number. If the shelf life has elapsed, the control system **15** may similarly inhibit use.

Though described in relation to constituent disposable **1424**, other constituent containers described herein may also include identification tags **1558** which may be sensed by an identification sensor **1560** of the system **10**. Other consumables (e.g. bags **26**) or containers/holders for consumables used by the system **10** (e.g. stopper dispensers **446**, see, e.g., FIGS. **82**A-C, clips **1700**, cutting cartridges **1800**, see e.g., FIG. **157**, fill nozzles **1910** see, e.g., FIG. **167**, etc.) may also include identification tags **1558** which may be sensed by identification sensors **1560** of the system **10**. Alternatively, beta containers **1608** (see, e.g., FIG. **111**) may include identification tags **1558** which may include information related to components stored inside the beta container **1608** as well as information related to the beta container **1608**. In such examples, individual components within the beta containers **1608** may not include identification tags **1558**. This may allow for, identification, reuse prevention, lot tracking, and differentiation between various types of these consumables and containers used by the system **10**.

Referring now to FIG. **215**, a flowchart **1300** detailing a number of example actions which may be executed to generate and package a desired fluid is shown. As shown, in block **1302** a control system **15** of the system **10** may receive a request to fill a bag **26**. The control system **15** may determine a constituent mass (e.g. sodium chloride) to dispense for that bag **26**. This mass may be a mass needed to generate a solution of a requested percent constituent by weight per unit volume (e.g. 0.9% saline). In block **1304**, bag **26** information may be collected from a set of bag characteristic sensors **444**A-C (see, e.g., FIG. **66**). In block **1306**, a first dispensing stage may commence. In this stage, the fluid delivered to the bag **26** may be entirely or predominately constituent concentrate. The constituent mass dispensed into the bag **26** may be tracked by reading from at least one conductivity sensor and a flowmeter or flow controller. Once, in block **1308**, the desired constituent mass is dispensed into the bag **26**, a second dispensing stage may commence in block **1310**. In the second stage, WFI may be dispensed into the bag **26**. The volume of WFI dispensed may be tracked by a flowmeter or flow controller. Once, in block **1312**, the volume of WFI needed to generate the desired solution has been dispensed, dispensing may halt in block **1314**. Also in block **1314**, the bag **26** may be collected from the fill station **356**. By delivering the constituent in the first stage, the second stage may be leveraged as a flush of the line leading to the filling nozzle. This may ensure that substantially all constituent concentrate in the line is dispensed into the bag **26**. Thus, the control system **15** may not have to account for a hold up volume in the line when attempting to pump constituent concentrate in order to generate a fluid with a desired concentration. Additionally, after the bag **26** has been filled, a subsequent bag **26** may be filled with a different type of solution or may be filled with a solution of a differing concentration. This may be done without having to waste constituent concentrate in a purge of fluid in the line between bags **26**.

Referring now to FIG. **216**, in certain embodiments, a crystalline constituent container **740** which fluid flows through may not be included. Instead, a crystalline constituent dispenser **780** may be used. As shown, fluid may exit the inlet manifold **734** and pass to a dosing manifold **784**. The dosing manifold **784** may also be in communication with a crystalline constituent dispenser **780**. The crystalline constituent dispenser **780** may dispense the crystalline constituent into the dosing manifold **784** via a dispensing assembly **787**. A motor **785** may be included to drive the dispensing assembly **878**. From the dosing manifold **784**, fluid may flow to a concentrate reservoir **782**. Where a concentrate reservoir **782** is included, at least one conductivity sensor (e.g. conductivity sensor **744**) of the constituent flow path of the mixing circuit **348** may be included in or be in communication with the interior volume of the concentrate reservoir **782**.

Referring now also to FIG. **217**, a cross sectional view of the example dosing manifold **784** in FIG. **216** is depicted. As shown, the dosing manifold **784** may include an interior cavity **786**. The interior cavity **786** may be in communication with the inlet manifold **734** via a first port **788**. The crystalline constituent dispenser **780** may be in communication with the interior cavity **786** via a second port **790**. The axis of the second port **790** may be arranged to allow of gravity feed of constituent from the crystalline constituent dispenser **780** into the interior cavity **786**. The interior cavity **786** may be constructed to generate specific flow patterns which may aid in encouraging vigorous mixing within the dosing manifold **784**. In the example embodiment, the interior cavity **786** includes a baffle **792** which is in line with the axis of the first port **788**. The baffle **792** may cause turbulent flow directly upstream of the second port **790** so as to encourage the crystalline constituent to quickly mix and dissolve upon introduction. The baffle **792** may also narrow the cross section of a section of the flow path from the first port **788** to the outlet **794** of the dosing manifold **784**. This

may generate a venturi effect which may cause flow where the second port **790** opens into the interior cavity **786** to be more rapid than elsewhere in the interior cavity **786**. Thus, as constituent enters the dosing manifold **784** it may be inhibited from piling up at the entry point. In other embodiments, the interior cavity **786** may include a plurality of baffles **792**. The interior cavity **786** may also include a funnel region **796** directly upstream of the outlet **794**. The funnel region **796** may encourage the generation of a vortex in the interior cavity **786** which may further aid in dissolving the crystalline constituent dispensed from the crystalline constituent dispenser **780**. In the example embodiment, a turbulence generator **798** is also disposed within the outflow conduit **800** from the dosing manifold **784**. The turbulence generator **798** may provide an additional aid which may help to dissolve the crystalline constituent. In the example embodiment the turbulence generator **798** is an insert with helicoid flighting, though any insert which may encourage mixing may be used. In alternative embodiments, the outflow conduit **800** from the dosing manifold **784** may be a coil of tubing which increases the transit time of fluid in the outflow conduit **800** as it travels to a downstream component in the fluid circuit **710** (e.g. conductivity sensor **744**).

Referring now to FIGS. **218** and **219**, an example crystalline constituent dispenser **780** is depicted. A portion of the crystalline constituent dispenser **780** is broken away to reveal components of the dispensing assembly **787** in FIG. **219**. As shown, the crystalline constituent dispenser **780** may include a constituent storage compartment **802**. The storage compartment **802** may have an outlet **804** which may feed into the dispensing assembly **787**. In the example embodiment, the dispensing assembly **787** includes a bore **806** within which an auger **808** is disposed. The auger **808** may be attached to a drive shaft **810**. The drive shaft **810** may extend to a motor **785** which may be operated to cause rotation of the auger **808**. As the auger **808** rotates, constituent may be advanced through the bore **806** toward an outlet **812** of the dispensing assembly **787**. The outlet may communicate with the interior volume of a dosing manifold **784** via the second port **790** (see, e.g., FIG. **217**) of the dosing manifold **784**. The control system **15** may command rotation of the auger **808** based on data collected from the conductivity sensor (e.g. conductivity sensor **744** of FIG. **204** in order to generate a solution of a desired concentration.

Referring now to FIGS. **220-222**, another embodiment of an example crystalline constituent dispenser **780** is depicted. Again, in FIG. **221** a portion of the crystalline constituent dispenser **780** is broken away to reveal components of the dispensing assembly **787**. As shown, the crystalline constituent dispenser **780** may include a constituent storage compartment **802**. The storage compartment **802** may have an outlet **804** which may feed into the dispensing assembly **787**. In the example embodiment, the dispensing assembly **787** includes an interior void **814** within which a paddle wheel **816** is disposed. The paddle wheel **816** may be attached to a drive shaft **810** which may extend to a motor **785** that may be operated to cause rotation of the paddle wheel **816**. Rotation of the paddle wheel **816** may cause volumes of constituent to be advanced from the storage compartment **802** to the outlet **812** of the dispensing assembly **787**. The outlet **812** may communicate with the interior volume of a dosing manifold **784** via the second port **790** (see, e.g., FIG. **217**) of the dosing manifold **784**. The control system **15** may command rotation of the paddle wheel **816** based on data collected from the conductivity sensor (e.g. conductivity sensor **744** of FIG. **204**) in order to generate a solution of a desired concentration.

Referring specifically to FIG. **222**, the exemplary paddle wheel **816** is shown in isolation. As shown, the paddle wheel **816** includes a number of circular members **818** which are disposed orthogonal to one another. Though two circular members **818** are shown in FIG. **222**, other embodiments may include a greater number. In the example embodiment, the two circular members **818** are disposed substantially perpendicular to one another.

Referring now to FIG. **223** and FIG. **224**, another example dispensing assembly **787** is depicted. Again, in FIG. **224** a portion of the housing **1018** of assembly **787** is broken away to reveal components of the dispensing assembly **787**. Though not shown, the dispensing assembly **787** may typically be attached to a constituent storage compartment **802** such as those shown and described above. The storage compartment **802** may feed into an inlet **1010** of the dispensing assembly **787**. In the example embodiment, the dispensing assembly **787** includes an interior passage **1016** within which an impeller **1012** is disposed. The passage **1016** may be sized such that the impeller **1012** prevents constituent from displacing through the passage **1016** without rotation of the impeller **1012**. The impeller **1012** may be attached to a drive shaft **810** which may extend to a motor **785** that may be operated to cause rotation of the impeller **1012**. Rotation of the impeller **1012** may cause volumes of constituent to be advanced from the storage compartment **802** to the outlet **1014** of the dispensing assembly **787**. The outlet **1014** may communicate with the interior volume of a dosing manifold **784** via the second port **790** of the dosing manifold **784**. The control system **15** may command rotation of the impeller **1012** based on data collected from the conductivity sensor (e.g. conductivity sensor **744** of FIG. **204**) in order to generate a solution of a desired concentration.

Referring now to FIGS. **225** and **226**, in some embodiments, a disc **1020** with a number of spaced apart depressions **1022** may be used in place of an impeller **1012**. The depressions **1022** may be evenly spaced about the disc **1020**. In the example embodiment, the depressions **1022** are spaced at even angular increments of 72°. The depressions **1022** may be the same shape. In the example, the depressions **1022** are bowl like. In other embodiments, the depressions **1022** may be obround (see FIG. **227**) or any other desired shape. As the disc **1020** is rotated (the disc **1020** may be coupled to a motor **785** driven drive shaft **810** similar to FIG. **223** for example), the depressions **1022** may be brought into alignment with an inlet **1024** of the dispensing assembly **787**. Constituent may fill the depression **1022**. As the disc **1020** is further rotated, the depression **1022** may pass the inlet **1024** and come into communication with the outlet **1026** of the dispensing assembly **787**. The constituent may fall from the depression **1022**. The outlet **1026** may communicate with the interior volume of a dosing manifold **784** via the second port **790** (see, e.g., FIG. **217**) of the dosing manifold **784**. The flat, depression **1022** free areas of the disc **1020** may close off the inlet **1024** and prevent any passage of constituent to the outlet **1026** when aligned over the inlet **1024**.

Referring now to FIG. **228**A and FIG. **228**B, another example dispensing assembly **787** is depicted. This dispensing assembly **787** may be used in place of the dispensing assemblies described above. As best shown in FIG. **228**B, the dispensing assembly **787** may include a rotatable disc **820**. The rotatable disc **820** may include a number of apertures **822** which extend through the disc **820**. The

rotatable disc **820** may be installed within a housing **824**. In the example embodiment, the housing **824** may include a first housing portion **826** and a second housing portion **828**. The first housing portion **826** may include an inlet **830** which may extend from a storage compartment **802** of a crystalline constituent dispenser **780**. The second housing portion **828** may include an outlet **832** which may be in communication with the interior volume **786** of a dosing manifold **784**. The inlet **830** and the outlet **832** may be offset from one another. As the rotatable disc **820** is rotated, an aperture **822** of the disc **820** may come into alignment with the inlet **830** from the storage compartment **802**. Constituent may fall into the aperture **822**. The disc **820** may then be rotated toward the outlet **832**. As the aperture **822** begins to rotate over the outlet **832**, the constituent may exit the dispenser assembly **787**.

In the example embodiment, the housing **824** includes an opening **831** which provides access to the edge of the rotatable disc **820**. A driven wheel may be in contact with the edge of the disc **820** through the opening and may allow the rotatable disc **820** to be rotated as needed to form a desired solution. In alternative embodiments, the disc **820** may include a drive shaft **810** (see, e.g., FIG. **221**) which may be driven by a motor to rotate the rotatable disc **820**. In still other embodiments, the edge of the disc may be teethed and a drive wheel may be included to cause rotation of the rotatable disc **820**.

Referring now to FIGS. **229**A and **229**B another exemplary crystalline constituent dispenser **780** is shown. As shown, the crystalline constituent dispenser **780** may include a first compartment **1350** and a second compartment **1352**. The first compartment **1350** may be a constituent storage compartment **802** which contains a supply of crystalline constituent. The first compartment **1350** and second compartment **1352** may be separated by a dispensing assembly **787**. In the example embodiment, the dispensing assembly **787** is driven through a drive shaft **810** by a motor **785**. Any dispensing assembly **787** described herein may be used. The second compartment **1352** may be a mixing compartment which may be used in place of a dosing manifold **784**. The second compartment **1352** may include a funnel region **796**. As shown, the funnel region **796** includes a plurality of inlet ports **1354**A, B. The inlet port **1354**A, B may be quick connect fittings (e.g. push to connect) which couple to lines from a WFI water source. As shown, the inlets **1354**A, B are positioned on opposite sides of the funnel region **796**. The inlets **1354**A, B are also oriented such that water entering the second compartment enters substantially tangentially with respect to the curve of the funnel region **796**. Thus, as water is delivered into the second compartment **1352** under pressure, the tangential inflow of water may encourage formation of a vortex of fluid within the second compartment **1352**. Additionally, the funnel region **796** may include a pair of conductivity sensors **1356** which may monitor the conductivity of fluid in the second compartment **1352**.

In certain examples, water may be delivered through the inlets **1354**A, B and into the second compartment **1352** in a first stage of a reservoir filling operation. This may establish a vortex of fluid in the second compartment. Filling of the second compartment may be halted in a second stage of a reservoir filling operation. The dispenser assembly **787** may be driven to begin to displace a desired amount of constituent from the first compartment **1350** into the second compartment **1352** during the second stage of the filling operation. The vortex may cause the crystalline constituent to rapidly dissolve. In a third stage of a reservoir filling operation, an outlet valve **1358** of the crystalline constituent dispenser **780** may be actuated open to allow fluid in the second compartment **1352** to begin exiting the crystalline constituent dispenser and flowing towards a reservoir such as a bag **26**. As shown, a tortuous flow path **1360** is included between the funnel region **796** and the outlet valve **1358** to further encourage robust dissolution of the constituent. Also in the third stage an additional volume of fluid may be delivered into the second compartment **1352**. The fluid delivered to the second compartment **1352** in the first and third stage may be desired fill volume of the reservoir (e.g. a bag **26**). Preferably, the dispensing assembly **787** may be driven at a rate sufficient to dispense the desired amount of constituent into the second compartment **1352** prior to the end of the third stage. This may allow the additional volume of water delivered into the second compartment **1352** in the third stage to flush any constituent containing solution out of the second compartment **1352**. In a fourth stage, a wait period may elapse with the outlet valve **1358** open to allow any fluid in the second compartment to pass out of the crystalline constituent dispenser **780** and into the reservoir.

Referring now to FIG. **230** and FIG. **231**, in some embodiments, the crystalline constituent dispenser **780** may be at least partially disposable (the motor **785** may typically be reused). This may be desirable as the crystalline constituent dispenser **780** may be a dead end within the fluid path which may be hard to disinfect by circulation of hot water through the fluid circuit **710** (see, FIG. **204**). Additionally, it may be difficult to back flow hot water through a crystalline constituent dispenser **780** as the dispensing assembly **787** may block communication from the outlet to the inlet of the crystalline constituent dispenser **780** when not being powered. The crystalline constituent dispenser **780** may come with its disposable components as part of a consumable sealed cartridge which is replaced by the user as a prior cartridge is depleted. FIGS. **230** and **231** depict an outlet **1030** portion of a dispensing assembly **787**. A similar arrangement may be included as the outlet of any of the dispensing assemblies described herein. As best shown in FIG. **231**, the outlet **1030** portion may include a seal member **1032**. The seal member **1032** may be a film seal or similar pierceable barrier which seals the end of the crystalline constituent dispenser **780** which is coupled to the second port **790** of the dosing manifold **784**. The opposite end of the crystalline constituent dispenser **780** may be attached to a closed storage compartment **802**. Thus, the crystalline constituent dispenser **780** may be in a sealed state prior to use.

As shown, the second port **790** may include a retainer clip **1036**. The outlet portion **1030** may include a flange **1038**. The second port **790** may also include a puncturing member **1034**. As the crystalline constituent dispenser **780** is mated to the second port **790**, the clip **1036** may spread apart to allow passage of the flange **1038**. The clip **1036** may be biased so as to close over the flange **1038** after the flange **1038** has been advanced passed the clip **1036**. This may retain the crystalline constituent dispenser **780** on the dosing manifold **784**. The puncturing member **1034** may puncture the sealing member **1032** as the outlet **1030** is coupled into the second port **790**. Gasketing members **1040** such as o-rings may be included to ensure that a seal to the surrounding environment is generated. As shown, the outlet **1030** includes a baffle **1042** which may direct or limit the flow of constituent into the dosing manifold **784**. Additionally, the puncturing member **1034** may include a number of perforations **1044**. The perforations **1044** may limit the flow of constituent into the dosing manifold **784**. This may help to ensure that a constant flow of constituent is provided to

the dosing manifold **784** as opposed to discrete boluses which may be output by certain dispensing assemblies **787**.

As shown, the second port **790** may also include a recirculation port **1046**. The recirculation port **1046** may allow for a fluid line to be connected to the second port **790** during a disinfect with hot water. When it is desired to run a disinfect, the crystalline constituent dispenser **780** may be removed and a cap (not shown) may be installed on the second port **790** to seal the opening. Hot water may then be circulated through the second port **790** via the line attached to the recirculation port **1046**.

Referring now to FIG. **232-234**, yet another example dispenser assembly **787** is depicted. This dispensing assembly **787** may be used in place of the dispensing assemblies described above. As shown, the dispensing assembly **787** may include a section of flexible tubing **832**. The tubing **832** may extend from an inlet **834** which may be in communication with a storage compartment **802** containing crystalline constituent. The tubing **832** may be oriented so as to allow for gravity feed of constituent into the tubing **832**. The inlet **834** may include a restrictor which lowers the rate of constituent flow into the tubing **832**.

The tubing **832** may be held in place by one or more cradle **836**. In the example embodiment two cradles **836** are included. The cradles **836** may position the flexible tubing **832** such that the tubing **832** lays up against pairs of support members **838**A, B. In the example embodiment, each pair of support members **838**A, B includes a support projection **838**A and a support roller **838**B. In alternative embodiments, only support rollers **838**B or support projections **838**A may be used. The support members **838**A, B of each pair may be spaced apart such that an occluder **840** may be displaced into an intermediary space between the support members **838**A, B. As shown in FIG. **233** and FIG. **234**, the occluders **840** of the dispensing assembly **787** may be actuated into a space between the support members **838**A, B or each pair of support members **838**A, B. This may deform the flexible tubing **832** and prevent flow through the tubing **832**.

As the dimensions of the tubing **832** may be known, the spacing between each pair of support members **838**A, B may be selected such that the interior volume of the tubing **832** between each of the support member **838**A, B pairs is a desired value. The occluder **840** associated with the downstream pair of support members **838**A, B may be actuated to block off flow through the tubing **832** (see FIG. **233**). Constituent may enter the tubing **832** and fill the volume of tubing **832** between the pairs of support members **838**A, B. The upstream occluder **840** may then be actuated to isolate the known volume of constituent between the pairs of support members **838**A, B. The downstream occluder **840** may then be actuated to retract that occluder **840** (see FIG. **234**). This may allow the constituent to exit the tubing **832** and enter into a dosing manifold **784**.

Referring now to FIGS. **235-236**, in certain system **10** embodiments, it may be desirable to perform filling and sealing of a bag **26** outside of an enclosure **12** which is controlled to a clean room standard. In such embodiments, the system **10** may fill bags **26** which have been previously sterilized without exposing the interior volume of the bag **26** to the surrounding environment. This may be accomplished by establishing an aseptic connection between a port **392** of the bag **26** and a filling conduit where the interiors of the port **392** and filling conduit are sealed from the surrounding environment until that connection is formed. Fluid from a fluid circuit **710** (see, e.g., FIG. **204**) may be transferred through the filling conduit and into the interior volume of the bag **26**. The connection between the filling conduit and the port **392** of the bag **26** may then be broken in an aseptic fashion. In some embodiments, the filling conduit and port **392** may be sealed from the surrounding environment as communication between the two is severed.

An exemplary fluid packaging apparatus **900** which may facilitate filling of bags **26** in an uncontrolled or less stringently controlled surrounding environment is shown in FIGS. **235-236**. In certain embodiments, a fluid packaging apparatus **900** may replace any of the sealing stations **358** described elsewhere herein. A fluid packaging apparatus **900** may also double as a filling station **356** allowing the fluid packaging apparatus **900** to be used in place of discrete filling and sealing stations **356**, **358**. This may reduce the complexity of system **10**, allow a system **10** to be made more compact, and limit requirements for tight environmental control of the area in which bags **26** are filled and sealed.

As shown in FIGS. **235-236**, the example fluid packaging apparatus **900** may include a fill conduit feed assembly **902**. The fill conduit feed assembly **902** may advance a segment of fill conduit from a conduit dispenser **1050** (see FIG. **237**) such as a spool or reel into the fluid packaging apparatus **900**. The fill conduit **1060** (see FIG. **237**) may have a terminal end which is sealed. The terminal end may be provided sealed or may be in a sealed state after the filling of a previous bag **26**. Thus the interior of the fill conduit **1060** lumen may be kept out of communication with the surrounding environment. The fill conduit **1060** may be fed into a tube retainer **934** of a tubing manipulation assembly **904** (see FIG. **240**) of the fluid packaging apparatus **900**.

Referring now to FIGS. **237** and **238**, an exemplary embodiment of conduit dispenser **1050** is depicted. As shown, the conduit dispenser **1050** may include a guide portion **1052** and a reel portion **1054**. The guide portion **1052** may be in the form of a conic frustum. The guide portion **1052** may direct the fill conduit **1060** out of an aperture of the guide portion **1052** as a fill conduit feed assembly **902** pulls fill conduit **1060** out of the conduit dispenser **1050**. The guide portion **1052** may include a bracket for mounting of the guide portion **1052** to a stand or the like which positions the conduit dispenser **1050** above the fill conduit feed assembly **902**. Any other suitable mounting member may be used in other embodiments. As shown, the reel portion **1054** may couple to the guide portion **1052**. In the example embodiment a bayonet mount is included. The guide portion **1052** includes mounting pins **1062**. The reel portion **1054** includes cooperating mounting tracks **1064**. In other embodiments, a magnetic coupling, threaded coupling, interference fit, snap fit, fasteners, adhesive, etc. may be used. In certain embodiments, the guide portion **1052** may be a reusable component. The reel portion **1054** may be disposable and new reel portions **1054** may be coupled to the guide portion **1052** as fill conduit **1060** is consumed.

The reel portion **1054** may have a cup like shape in which a coil of fill conduit **1060** may be stored. An organizer **1058** may be disposed within the reel portion **1054**. In the example embodiment, the organizer **1058** is depicted as a plurality of walls which may provide a set or tracks within which the fill conduit **1060** may be laid. As the guide portion **1052** is a conic frustum, the walls may increase in height with proximity to the center of the reel portion **1054**. This may allow for more fill conduit **1060** to be placed within the tracks formed by the organizer **1058**. In alternative embodiments, a mandrel around which the fill conduit **1060** is wrapped may be used as the organizer **1058**. The reel portion **1054** may be sized so as to hold a length of fill conduit **1060** sufficient to fill 50-100 bags **26**. In some embodiments, the

reel portion **1054** may hold around 10-20 feet of coiled fill conduit **1060**. Larger or smaller reel portions with varying capacities may also be available. The fill conduit **1060** may come pre-primed and sterile. The fill conduit **1060** may be provided in a sealed state such that the interior of the fill conduit **1060** and the fluid contained therein is out of communication with the surrounding environment.

As best shown in FIG. **237**, the reel portion **1054** of the conduit dispenser **1050** may include an inlet orifice **1066**. A portion of the fill conduit **1060** which extends to the fluid circuit **710** (see, e.g. FIG. **204**) may enter into the reel portion **1054** via the inlet orifice **1066**. In the example embodiment, a standoff **1068** which cradles the fill conduit **1060** upstream of the inlet orifice **1066** is also included. The standoff **1068** may aid in ensuring that the radius of any bend in the fill conduit **1060** as it enters the inlet orifice **1066** is greater than a value which could lead to kinking of the fill conduit **1060**. In certain embodiments, the terminal end of the fill conduit **1060** which connects to the fluid circuit **710** may include a quick connect fitting to facilitate establishment of a fluidic connection. In alternative embodiments, the inlet orifice **1066** may be included in side wall of the reel portion **1054** as opposed to a top face of the reel portion as shown. In other embodiments, the reel portion **1054** may include a quick connect or other fitting which an end of the fill conduit **1060** is in communication with. The reel portion **1054** may be docked on a cooperating fitting in communication to a source of fluid to place the fill conduit **1060** into communication with the source. In these alternative embodiments, the standoff **1068** may be omitted.

In the example embodiment, the organizer **1058** is also arranged to aid in preventing any kinking of the fill conduit **1060**. As shown, the inlet orifice **1066** opens into the innermost portion of the track formed by the organizer **1058**. The inner most portion of the track has a radius which may not cause kinking of the fill conduit **1060** within the reel portion **1054**. The fill conduit **1060** may be wrapped once around the inner track **1070**A, then pass through a break **1072** in the organizer **1058** wall to an intermediate track **1070**B. The fill conduit **1060** may be wrapped once around the intermediate track and then pass through a break **1072** in the organizer **1058** wall to and outermost track **1070**C. In alternative embodiments where the reel portion **1054** has a larger capacity there may be at least one additional intermediate track **1070**B. The fill conduit **1060** may be wrapped along the outermost track **1070**C. The intermediate track or tracks **1070**B may then be filled followed by the inner most track **1070**A. This wrapping process may be repeated until the fill conduit **1060** is completely wrapped into the organizer **1058**. This may encourage fill conduit **1060** to be dispensed in a manner which is unlikely to lead to snagging or kinking. Additionally, as shown, the organizer **1058** may include rounded or chamfered edges which may similarly limit opportunity for fill conduit **1060** to kink or snag.

Where the fill conduit **1060** does not come pre-primed, the fill conduit **1060** may be connected to the fluid circuit **710** and hot water may be delivered through the fill conduit **1060** to a drain or a priming reservoir (e.g. a bag or other container). The control system **15** may require that hot water flow through the fill conduit **1060** for a predefined period of time (which may be preset depending on the temperature of the hot water) before the control system **15** may allow the fluid packaging apparatus **900** to operate with a new conduit dispenser **1050**. Once the time period has been met, the downstream end of the fill conduit **1060** may be sealed by a bag or tube sealer assembly **906** (described later in the specification). This may leave the fill conduit **1060** primed and disinfected prior to use.

Referring now to FIG. **239**, an exploded view of an example fill conduit feed assembly **902** is shown. As shown, the fill conduit feed assembly **902** may include a motor **912**. The motor **912** may drive a shaft **914** which may be keyed (in the example embodiment with a "D" shaped cross section). The shaft **914** may mate into an orifice in a first gear **916** or a feed roller **920** coupled thereto. The first gear **916** may interdigitate with a second gear **918**. Each of the gears **916**, **918** may be coupled to a respective feed roller **920**. As the shaft **914** rotates, this rotation may be transferred to the first and second gear **916**, **918** which in turn may cause rotation of the feed rollers **920**. As shown, the gears **916**, **918** and feed rollers **920** may be captured within a housing **922**. The housing **922** may include a feed passage **924** through which the fill conduit **1060** may be displaced. As shown, the rollers **920** include a concave surface **926** which may contact the exterior surface of the fill conduit **1060**. This may ensure that the feed rollers **920** do not collapse or obstruct the lumen of the fill conduit **1060** as the fill conduit **1060** is displaced through the fill conduit feed assembly **902**. The feed rollers **920** or the concave surface of the feed rollers **920** may be constructed of an elastomer or other material with a high friction coefficient so as to facilitate feed of the fill conduit **1060** as the feed rollers **920** are rotated.

Referring again primarily to FIGS. **235** and **236**, in the example embodiment a grasper **418** is depicted and may be attached to a robotic arm **360** which may transport bags **26** to and from the fluid packaging apparatus **900**. In some embodiments, the grasper **418** may remain at the fluid packaging apparatus **900** during filling and may hold the bag **26** in place. The bag **26** may be introduced to the fluid packaging apparatus **900** pre-sterilized. The port **392** of the bag **26** which is to be used for filling may be provided in a sealed state. Thus, the interior volume of the port **392** and bag **26** may be kept out of communication with the surrounding environment. When the bag **26** is introduced to the fluid packaging apparatus **900**, the port **392** to be used for filling may be fed into the tube retainer assembly **934** of the tubing manipulation assembly **904** through a base plate **911** (see FIG. **240**) of the fluid packaging apparatus **900**. When both the port **392** and fill conduit **1060** are disposed in the tube retainer assembly **934**, they may be substantially parallel to one another.

Referring now also to FIGS. **240-241**, an example tubing manipulation assembly **904** and example base plate **911** are shown. As shown, a fill conduit feed guide **930** (best shown in FIG. **240**) is included and may direct the fill conduit **1060** as the fill conduit **1060** is displaced into the tube retainer assembly **934**. The fill conduit feed guide **930** may have a funnel like shape and may direct the fill conduit **1060** into a fill conduit retention trough **932** of the tube retainer assembly **934**. Similarly, the base plate **911** may include a port guide **936** which may aid in directing the port **392** of the bag **26** into a port retention trough **938** of the tube retainer assembly **934**. The fluid packaging apparatus **900** may include tubing sensors **933**, **935** which may sense whether tubing is present in the fill conduit retention trough **932** and port retention trough **938**. The tubing sensors **933**, **935** may be optical sensors such as reflectivity based sensors which may monitor the fill conduit retention trough **932** and port retention trough **938** via windows **937** extending into each of the fill conduit retention trough **932** and port retention trough **938**. The control system **15** may monitor the output of the tubing sensors **933**, **935** and may use data from the

tubing sensors **933**, **935** as feedback for the fill conduit feed assembly **902** and grasper **418**.

As shown, the tube retention assembly **934** may include a first portion **940**A and a second portion **940**B. The first and second portion **940**A, B may be separated by a gap. The first portion **940**A of the tube retention assembly **934** may be displaceable relative to the second portion **940**B which in the example embodiment is fixed to the base plate **911**. As shown, the first portion **940**A is attached to a sled body **942** which may translationally displace along a set of guide rods **946** via a motor **944**. The sled body **942** may also be coupled to a pivot body **943**. The pivot body **943** may be pivotally coupled to a guide rod **945** allowing for rotation of the tubing manipulation assembly **904** and attached first portion **940**A of the tube retention assembly **934** about the axis of the guide rod **945**.

Additionally, as best shown in FIG. **241**, the fill conduit retention trough **932** and the port retention trough **938** may each include enlarged regions **948** on each side of the gap between the first and second portion **940**A, B of the tube retention assembly **934**. These enlarged regions **948** may accommodate the shape change of the fill conduit **1060** and port **392** when the fill conduit **1060** and port **392** are flattened by an occluder assembly **908**.

Referring now also to FIGS. **242-244**, an exemplary occluder assembly **908** is depicted. The occluder assembly **908** may include a motor **952** which may displace a carriage **953** to which an occluder **950** is coupled toward and away from the tube retainer assembly **934**. This may cause the fill conduit **1060** and the port **392** to be flattened against the walls of their respective fill conduit retention trough **932** and port retention trough **938**. This may drive fluid out of the port **392** and fill conduit **1060** at least along a portion of the both the port **392** and the fill conduit **1060** that is located in the tube retainer assembly **934**. As shown, the occluder **950** may include a first portion **956**A and a second portion **956**B. The first and second portion **956**A, B may be separated from one another by a gap. The gap between the first and second portion **956**A, B of the occluder **950** may be about the same width as the gap between the first and second portion **940**A, B of the tube retainer assembly **934**. The gap may also be disposed along the same plane as that of the tube retainer assembly **934**. Each of the first and second portion **956**A, B of the occluder **950** may include a set of occluder members **958**. The occluder members **958** of each set of occluder members **958** may be spaced apart from one another a distance equal to the spacing between the fill conduit retention trough **932** and the port retention trough **938** of the tube retention assembly **934**. This may allow the occluder members **958** to pass into the fill conduit retention trough **932** and the port retention trough **938** when the occluder **950** is advanced by the motor **952**.

As shown, the second portion **956**A of the occluder **950** is mounted on a rail **960**. This may allow the second portion **956**B of the occluder **950** to displace along with the first portion **940**A of the tube retention assembly **934** as the sled body **942** of the tubing manipulation assembly **904** (see, e.g., FIG. **241**) is moved. The rail **960** is included on a boom **962** which may be pivotally coupled to the guide rod **945** (see, e.g., FIG. **240**). This may allow the second portion **956**B of the occluder **950** to rotationally displace in tandem with the tube manipulation assembly **904**. The guide rod **945** may also direct movement of the occluder assembly **908** as the motor **952** displaces the carriage **953** and attached occluder **950** toward and away from the tube retention assembly **934**.

As shown, the first and second portion **956**A, B of the occluder **950** may also include tie pins **964**. The tie pins **964** may extend through the first and second portion **940**A, B of the tube retention assembly **934** into the first and second portion **956**A, B of the occluder **950**. The tie pins **964** may help to couple motion of first and second portion **956**A, B of the occluder **950** to motion of the first and second portions **940**A, B of the tube retention assembly **934**.

The second portion **956**B of the occluder **950** may be coupled to the carriage **953** via a fastener **961**. Specifically, the fastener **961** may extend through an elongate slot in the boom **962** and into a receiving hole in the carriage **953**. As best shown in FIG. **244**, the second portion **956**B of the occluder **950** may also be coupled to the carriage **953** via a bias member **957**. In the example embodiment, the bias member **957** is depicted as an extension spring, though any suitable bias member **957** may be used. The bias member **957** may exert a force which urges the second portion **956**B of the occluder **950** to rotate about the guide rod **945** (see, e.g., FIG. **241**) toward the first portion **956**A of the occluder **950**. The bias member **957** is further described in relation to FIG. **247**. The elongate slot in the boom **962** may provide sufficient clearance for the fastener **961** to allow for this rotation to occur. Additionally, the carriage **953** may include rolling element bearings **959** which extend proud of the face of the carriage **953** adjacent the boom **962**. The rolling element bearings **959** may allow the boom **962** to pivot without binding up against the carriage **952**.

Referring now to FIG. **245**, a cutter assembly **910** may be included in the fluid packaging apparatus **900**. The cutter assembly **910** may be actuated by a cutter motor **970** which may drive a heated blade **972**. The heated blade **972** may be disposed in a blade retainer **974** which may include a chamber in which a heater **976** is disposed. The example heater **976** is shown as a cartridge heater. The blade retainer **974** may also include a mount **978** for a temperature sensor **980** which may provide data to a control system **15** which governs operation of the heater **976**. In certain embodiments, the heated blade **972** may be constructed of a metallic material which may be coated. In certain embodiments, a ceramic coating may be applied to the metallic material. The ceramic coating may be a cerakote in certain embodiments available from Cerakote of 7050 6th Street White City, Oreg. In alternative embodiments a synergistic surface enhancement NEDOX coating such as NASA material #20386 MSFC Handbook 527F (NEDOX SF-2), Johnson Space Flight Center #D9604F may be used. Such coatings may allow the heated blade **972** to be repeatedly reused during operation of the fluid packaging apparatus **900**. NEDOX coatings may, for example, be available from General Magnaplate of 801 Avenue G East, Arlington, Texas.

As shown, the blade retainer **974** may be mounted on an arm **975** of the cutter assembly **910** which may couple onto the guide rod **945** to aid in directing the actuation movement of the cutter assembly **910**. Thus, the guide rod **945** may provide a single axis which the cutter assembly **910**, occluder assembly **908**, tubing manipulation assembly **904** are all constrained to. By placing each of these assemblies on a single axis, the fluid packaging apparatus **900** may be made in a compact fashion.

Referring now also to FIG. **246**, the cutter motor **970** may actuate the heated blade **972** into the gap extending through the tube retainer assembly **934** and occluder **950**. This may be done while the occluder assembly **908** is actuated to flatten the fill conduit **1060** and port **392** within the fill conduit retention trough **932** and the port retention trough **938** of the tube retention assembly **934**. The heated blade **972** may cut through the port **392** and fill conduit **1060** as the heated blade **972** is displaced into the gap. This may sever

the terminal ends of the port **392** and fill conduit **1060** from the remaining portions of port **392** and fill conduit. Since the fill conduit **1060** and port **392** are flattened, substantially no liquid (e.g. water or saline) may be present in the lumens of these tubes. This may ensure that the liquid does not behave as a heat sink or boil due to the heat of the heated blade **972**. Thus, flattening of the fill conduit **1060** and port **392** may simplify cutting and welding of the fill conduit and port **392**.

Still referring to FIG. **246**, as the heated blade **972** cuts through the port **392** and fill conduit **1060**, the material of the port **392** and fill conduit **1060** may melt against the faces of the blade such that a seal is formed and maintained against the face of the heated blade **972** during the cutting action. This may prevent the interior lumens of the fill conduit **1060** and the port **392** from being exposed to the surrounding environment as they are cut. With the cutting assembly **910** held in the actuated position, a first portion **940**A of the tube retainer assembly **934** may be displaced relative to a second portion **940**B of the tube retainer assembly **934** until the remaining portions of the port **392** and the fill conduit **1060** are aligned or coaxial with one another. As mentioned elsewhere, the second portion **956**B of the occluder **950** may be disposed on a rail **960** and may be coupled to the first portion **940**A of the tube retention assembly **934**. Thus, the second portion **956**B of the occluder **950** may displace in tandem with the first portion **940**A of the tube retention assembly **934**. This may ensure that the fill conduit **1060** remains in a flattened and occluded state during displacement of the first portion **940**A of the tube retention assembly **934**. The first portion **940**A of the tube retainer assembly **934** may be on a first side of the heated blade **972** while the second portion **940**B may be on an opposing side of the heated blade **972**. The interior lumens of the remaining portions of the port **392** and the fill conduit **1060** may remain in sealing contact with and slide along opposing faces of the heated blade **972** during this displacement. Thus, the interior lumens of the remaining portion of the port **392** and fill conduit **1060** may be maintained out of communication with the surrounding environment as they are brought into alignment with one another.

Referring now primarily to FIG. **247**, in certain embodiments, as the heated blade **972** is withdrawn, the filling conduit **1060** and port **392** may be joined to one another such that a continuous lumen extending from the fill conduit **1060** to the interior of the bag **26** through the port **392** is formed. As the withdrawal occurs, the remaining portions of the port **392** and fill conduit **1060** may be pressed against one another such that a junction is formed and their interiors are kept isolated from the surrounding environment. As shown, the cutter assembly **910** may include a carriage portion **982** in which a cam surface **984** is provided. The tubing manipulation assembly **904** may include a cam follower **986**. The cam follower **986** may be held in place against the cam surface **984** via force exerted by the bias member **957** of the occluder assembly **908** (see, e.g. FIG. **244**). This force may be transferred through the tie pin **964** coupling the second portion **956**B of the occluder **950** to the first portion **940**A of the tube retention assembly **934** (see, FIG. **243**). When the heated blade **972** of the cutter assembly **910** is actuated into the tube retention assembly **934** the cam follower **986** may be positioned against a raised portion **985**A of the cam surface **984** as depicted in FIG. **247**. In this position, the gap between the first and second portion **940**A, B of the tube retention assembly **934** and the gap between the first and second portion **956**A, B of the occluder **950** may be present.

In certain embodiments, a counterweight may be included on the tubing manipulation assembly **904**. The counterweight may extend from the tubing manipulation assembly **904** past the cam surface **984**. Thus, the counterweight may provide additional force that may aid in holding the cam follower **986** against the cam surface **984**. In some embodiments, a counterweight may be used in place of the bias member **957**. In certain embodiments, an additional bias member which couples the tubing manipulation assembly **904** to the base plate **911** may be included. This additional bias member may provide additional force which may aid in holding the cam follower **986** against the cam surface **984**. In some embodiments, a bias member coupling the tubing manipulation assembly **904** may be used in place of the bias member **957** (with or without the above described counterweight).

As the heated blade **972** begins to be retracted out of the cut fill conduit **1060** and port **392**, the cam follower **986** may transition to a sloped section **985**B of the cam surface **984**. The sloped section **985**B of the cam surface **984** may lead to a recessed section **985**C of the cam surface **984**. Thus, as the cam follower **986** passes along the sloped section **985**B of the cam surface **984**, the force exerted by the bias member **957** (see FIG. **244**) may cause the gaps to begin to close. Specifically, in the example embodiment, this force may cause the second portion **956**B of the occluder **950** to pivot about the guide rod **945** and against the roller element bearings **959** toward the first portion **956**A of the occluder **950** (see FIG. **244**). In turn, this may pull on the tubing manipulation assembly **904** (see, e.g., FIG. **240**) via the tie pin **964** connecting the first portion **940**A of the tube retention assembly **934** to the second portion **956**B of the occluder **950** (see FIG. **243**). The pulling force may cause the tubing manipulation assembly **904** to rotate about the axis of the guide rod **945** (see, e.g. FIG. **240**). As a result, the previously aligned remaining portions of the port **392** and the filling conduit **1060** may be driven toward one another via force originating from the bias member **957**. The remaining portions of the filling conduit **1060** and port **392** may melt into each other and begin to form a junction as the heated blade **972** is retracted out of the way.

When the heated blade **972** is completely retracted out of the tube material, the cam follower **986** may transition to the recessed portion **985**C of the cam surface **984**. The force exerted by the bias member **957** may substantially close the gap and press the remaining portion of the port **392** and filling conduit **1060** against one another. This may allow the formation of the junction to complete. As the port **392** and filling conduit **1060** melt together as the heated blade **972** is removed, the interior of the tubing may be kept out of communication with the surrounding environment during the joining process.

In certain fluid packaging apparatus **900** embodiments, the lumen at the juncture between the fill conduit **1060** and port **392** may not always remain patent or entirely patent after the junction is formed. In such examples, one of first portion and second portion **940**A, B of the tube retainer assembly **934** may be displaced relative to the other in order to break any seal which is obstructing the lumen. In the example embodiment described above, the sled **942** of the tubing manipulation assembly **904** may be driven back and forth over a predefined distance a number of times to exert stress on the bond closing off the lumen or portion of the lumen. This stress may disrupt the bond in the lumen without disrupting the integrity of the junction between the filling conduit and port **392**. Fluid may then be delivered into the bag **26** to fill the bag **26**.

The fill conduit feed assembly **902** may be positioned such that the feed passage **924** is aligned substantially in the

center of the range of displacement of the displaced portion **940**A, B of the tube retainer assembly **934**. Thus, as the sled **942** is driven back and forth to disrupt any potential bond within the lumen, the angle of fill conduit **1060** exiting the fill conduit feed assembly **902** is kept as small as possible. This may limit axial stresses exerted on the fill conduit **1060** during this displacement and may limit any force which may tend to pull apart the newly formed junction.

Referring now to FIG. **248** and FIG. **249**, the tube sealer assembly **906** may then be actuated to seal and cut the port **392** in order to free the filled bag **26** from the fluid packaging apparatus **900**. Again, this may be accomplished without exposing the interior of the port **392** lumen or bag **26** to the surrounding environment. Bag sealer assemblies **906** such as that described in relations to FIG. **248** and FIG. **249** may be included in other embodiments described herein. For example, a tube sealer assembly **906** may be included in the filling station **1110** described in relation to FIGS. **199**A-**203**. Such a tube sealer assembly **906** may be used to shorten the length of fill lines **1090** extending from the bags **26**. The sealing station **1616** shown in FIG. **111** may also be a tube sealer assembly **906** as shown in FIGS. **248**-**249**.

As shown, the example tube sealer assembly **906** of FIG. **248** and FIG. **249** may include a set of opposing jaws **990**. The opposing jaws **990** may be displaced toward and away from each other via a motorized drive **992**. In the example embodiment, the opposing jaws **990** may be coupled into a track **994** along which the jaws **990** may be displaced. When a port **392** of a bag **26** is ready to be sealed, the opposing jaws **990** may be driven toward one another so as to pinch the port **392** between sealing plates **998** of each jaw **990**. This may drive fluid out of the lumen at the pinched region of the port **392**.

A heater **996** such as a cartridge heater may be disposed in each of the opposing jaws **990**. The heaters **996** may be powered so as to heat a sealing plates **998** to a temperature sufficient to melt the port material. As the port **392** is pinched, the walls of the lumen of the port **392** may be pressed against one another. As the material melts, the walls of the lumen of the port **392** may melt into one another sealing off the port **392**. Each of the sealing plates **998** may include a mounting hole in which a temperature probe **999** may be disposed. Data from the temperature probes **999** may be utilized by the control system **15** to govern the heating of the sealing plates **998** via the heaters **996**.

As shown, each of the jaws **990** may also include a cutter insert **1000**. The cutter insert **1000** may include a raised peak **1004** which may extend through a slot **1002** in the sealing plate **998** with which it is associated. In the example embodiment, the peaks **1004** of each opposing jaw **990** are in the same plane as one another such that they may abut when the opposing jaws **990** are actuated closed by the motorized drive **992**. The peaks **1004** may serve to cut the port **392** and free the filled bag **26** from the fluid packaging apparatus **900**. Preferably, the cutter inserts **1000** may only cut through the port **392** after a robust seal has been created in the port **392** by the sealing plates **998**. In some examples, the cutter insert **1000** may be constructed of a material with relatively low thermal conductivity. For instance, the cutter insert **1000** may be a plastic with a low thermal conductivity and high resistance to thermal degradation such as a plastic from the Polyaryletherketone (PAEK) family like Polyether ether ketone (PEEK). Other suitable materials may be used in alternative embodiments. Using a material which is a poor conductor of heat to construct the cutter inserts **1000** may be desirable as it may ensure that the port **392** reaches a suitable temperature to form a robust seal before the port **392** is severed. The heat from the sealing plates **998** may heat the port **392** until the port **392** material becomes sufficiently molten that the pressure exerted by the peaks **1004** is able to press through and cut the port **392**. As shown, the peaks **1004** are blunt and rounded so as to limit concentration of pressure at any one point along the port **392** further helping to ensure that a robust seal is generated prior to severing of the bag **26**. Where the tube sealer assembly **906** is intended to seal, but not cut through a port **392** (e.g. sealing station **1616** of FIG. **111**), the cutter inserts **1000** may be omitted.

With the bag **26** freed, the fill conduit **1060** may be advanced such that the junction formed between the fill conduit **1060** and the port **392** is located at the tube sealer assembly **906**. The tube sealer assembly **906** may again be actuated to form a seal in the fill conduit **1060** upstream of the junction and sever the juncture from the fill conduit **1060**. The fill conduit feed assembly **902** may then retract the fill conduit **1060** such that the sealed end of the fill conduit **1060** is disposed in the fill conduit retention trough **932** of the tube retainer assembly **934**. The next bag **26** may be loaded into the fluid packaging apparatus **900** and the process may be repeated as desired.

It should be noted that the motors **944**, **952**, **970**, **992** of the fluid packaging apparatus **900** may, in certain embodiments, be replaced with pneumatic or hydraulic actuators. In such embodiments, a compressor and accumulator may be provided to facilitate actuation. Alternatively, a consumable cartridge of pressurized gas may be installed in the fluid packaging apparatus **900** and plumbed via a manifold to each of the actuators. Where motors **944**, **952**, **970**, **992** are used, each of the motors included in the fluid packaging apparatus **900** may be outfitted with an encoder which may provide feedback on displacement.

Referring now to FIGS. **250** and **251**, in certain embodiments, a bag sealing assembly **906** may be used to isolate a sample of fluid within the port **392** of the bag **26**. In such embodiments, a cutter insert **1000** may not be included in each of the sealing plates **998**. The bag sealing assembly **906** may be included in various embodiments of the system **10** which may not necessarily include a fluid packaging apparatus **900**. A bag sealing assembly **906** may for example be included in the systems **10** depicted in FIG. **54**, FIG. **56**, and FIG. **177**. This may allow for a system **10** to be constructed without a quarantine repository **362** (see, e.g. FIG. **56**) within the enclosure **12** of that system **10**. Bags **26** may be filled and an aliquot of fluid for later sampling may be isolated within a segment of the port **392** through which the bag **26** is filled. The port **392** of the bag **26** may be sealed at a first location **1140** which is proximal to the interior volume of the bag **26**. As above, when the seal is generated, the walls of the lumen on the interior of the port **392** may melt into one another closing off the flow path through the port **392**. As shown in FIG. **250**, the port **392** of the bag **26** may also be sealed at a second location **1142** which is upstream of the first location **1140**. In certain examples, the seal at the first location **1140** may be generated before the seal at the second location **1142**. The distance between the first location **1140** and second location **1142** may be selected based on the lumen diameter of port **392** and the desired sample volume.

Once the bag **26** has been filled and a sample has been isolated within the port **392**, the bag **26** may be released from the system **10**. A user may use a sampling instrument to access to the sample for testing. For example, the user may puncture the port **392** between the first and second locations with a syringe or similar implement and extract fluid from the sample volume. Testing (e.g. pyrogen testing) may be

conducted on fluid from the sample. The port **392** may then be cut at the first location **1140** and the portion of the port **392** including the sample volume and seal at the second location **1142** may be discarded.

Referring now to FIG. **252**, a block diagram of a system **10** for producing and packaging medical fluids is shown. An exemplary embodiment of the system **10** shown in the block diagram of FIG. **252** is depicted in FIGS. **253-254**. Though an environmentally controlled enclosure **12** (see, e.g., FIG. **111**) may be included, no enclosure **12** is depicted in FIGS. **253-254**. The system **10** may fill bags **26** which have been previously sterilized outside of an enclosure **12** without exposing the interior volume of the bag **26** or a filling conduit **2018** to the surrounding environment. The port **1654** of a bag **26** and a filling conduit **2018** may be provided in a sealed and sterile state. The port **1654** and filling conduit **2018** may be aseptically connected and fluid from a fluid circuit **710** (see, e.g., FIG. **204**) may be transferred into the bag **26** via the filling conduit **2018**. The connection between the filling conduit **2018** and the port **1654** may then be broken in an aseptic fashion leaving the port **1654** and fill conduit **2018** separated and in a sealed state.

As shown, the system **10** may include a bag carriage **2000** which may hold a bag **26**. The bag carriage **2000** may be coupled to a carriage transport assembly **2004**. The bag carriage **2000** may be driven along the carriage transport assembly **2004** to displace the bag carriage **2000** and any bag **26** thereon to various stations included in the system **10**. The carriage transport assembly **2004** may include a sensor assembly **2290** (e.g. laser range finder) which may monitor the location of the bag carriage **2000** along the carriage transport assembly **2004**. Displacement of the bag carriage **2000** may be controlled via commands issued from the control system **15** based at least in part on data received from the sensor assembly **2290**. The bag carriage **2000** may include at least one grasper **2002** which may grasp bags **26** and hold bags **26** in place on the bag carriage **2000**. The bag carriage **2000** may also include at least a portion which may be displaceable to raise and lower a bag **26** held by the one or more grasper **2002**.

The bag carriage **2000** may be displaced to a bag feeder **1622** of the system **10**. The bag feeder **1622** may be any bag feeder **1622** described herein. A bag **26** may be collected from the bag feeder **1622** by grasping the bag **26** with the grasper **2002** of the bag carriage **2000**. Once a bag **26** is in place on the bag carriage **2000**, the bag carriage **2000** may be displaced to a welding station **2006** of the system **10**. At the welding station **2006**, a port **1654** of the bag **26** may be joined to an end of a fill conduit **2018** via a weld in an aseptic fashion. The fill conduit **2018** may be dispensed (e.g. spooled out) of a fill conduit dispenser **1050** (see e.g. FIGS. **237-238**). The system **10** may include an exhaust system **2008**. Any fumes generated during welding may be collected via a ventilation system **2010** connected to the exhaust system **2008**. The exhaust system **2008** may include one or more filter element which may clean the fume laden air collected by the ventilation system **2010**.

After welding, the port **1654** of the bag **26** may be connected to the fill conduit **2018** via the weld. The fill conduit dispenser **1050** may be coupled to a dispenser transport assembly **2014** to allow the fill conduit dispenser **1050** to be displaced in tandem with the bag carriage **2000**. The dispenser transport assembly **2014** may include a sensor assembly (e.g. laser range finder) which may monitor the location of the conduit dispenser **1050** along the dispenser transport assembly **2014**. Displacement of the conduit dispenser **1050** may be controlled via commands issued from the control system **15** based at least in part on data received from the sensor assembly **2292**.

In certain examples, there may be a possibility that the weld formed at the welding station **2006** may obstruct or partially close off (further discussed elsewhere in the specification) a portion of the flow path in the fill conduit and/or port **1654** in the area of the weld. The bag carriage **2000** along with a tubing dispenser **1050** may be displaced to weld opening station **2016**. At the weld opening station **2016**, the joint between the fill conduit **2018** and port **1654** may be acted upon (e.g. compressed, squished) to exert stress on the bond closing off the lumen or portion of the lumen. This stress may disrupt the bond within the lumen without disrupting the integrity of the junction between the filling conduit **2018** and port **1654**.

The bag carriage **2000** and fill conduit dispenser **1050** may then be displaced to a separating station **2020** of the system **10**. Fluid may be delivered into the bag **26** though the fill conduit **2018** from a fluid circuit **710** of the system **10**. In other embodiments, filling of the bag **26** may be performed at the weld opening station **2016** or intermediate the weld opening station **2016** and the separating station **2020**. At the separating station **2020**, the port **1654** of the bag **26** may be separated from the fill conduit **2018**. As the port **1654** and fill conduit **2018** are separated, the port **1654** and fill conduit **2018** may be sealed. The span of tubing including the joint between the fill conduit **2018** and port **1654** formed at the welding station **2006** may be removed at the separating station **2020**.

After the port **1654** and fill conduit **2018** are separated at the separating station **2020**, the fill conduit dispenser **1050** may be displaced back to the welding station **2006**. The bag carriage **2000** may be displaced to a labelling station **2022**. A label may be applied to the bag **26** on the bag carriage **2000** at the labeling station **2022**. Any suitable labeler (such as any of those mentioned herein) may be used. The bag carriage **2000** may then be displaced to an output chute **2024** (not shown in FIGS. **253-254**) and the bag **26** may be released from the grasper **2002**. This may allow the bag **26** to pass into the output chute **2024** and out of the system **10**. Though the bag **26** is labelled at the end of the packaging process, the bag **26** may be labelled at any convenient point within the system **10**. In the event that the bag **26** needs to be rejected after labeling, the bag **26** may be returned to the labeling station **2022** and the label may be adjusted (e.g. blacked out, crossed out, etc.) to indicate the bag **26** is not to be used.

Referring now to FIG. **255**, an exemplary bag carriage **2000** which may be included in the system **10** of FIG. **252** is depicted. As shown, the bag carriage **2000** may include a base **2030**. The base **2030** may include a number of slide bearings **2032**. The slide bearings **2032** may engage with guides **2034** (see, e.g., FIG. **254**) of the carriage transport assembly **2004** of the system **10**. This may allow the bag carriage **2000** and any bag **26** thereon to be displaced along a first displacement axis defined by the carriage transport assembly **2004**.

A stand member **2036** may be coupled to the side of the base **2030** opposite the slide bearings **2032**. The bag carriage **2000** may also include a platform **2038**. The platform **2038** may be displaceable with respect to base **2030** and in some embodiments may be slidingly coupled to the stand member **2036**. One of the platform **2038** and stand member **2036** may, for example, include a rail while the other may include a track with which the rail is engaged. Guide and slide bearing arrangements may be used in certain alternative examples to slidingly couple the stand member **2036** and

platform **2038**. An actuator **2040** (e.g. electromechanical, pneumatic, hydraulic) may be mounted on the base **2030** and may include an output shaft **2042** which may be coupled to the platform **2038**. The control system **15** may command powering of the actuator **2040** to raise and lower the platform **2038** with respect to the base **2030**. The sliding coupling between the stand member **2036** and the platform **2038** may constrain displacement of the platform **2038** to a prescribed second displacement axis. The second displacement axis may be substantially perpendicular to the first displacement axis. A sensor assembly **2039** may be coupled to the platform **2038** and may monitor displacement of the platform **2038** with respect to the base **2030** along the second displacement axis. Any suitable sensor type may be used. The sensor assembly **2039** may, for example, be a laser range finder, ultrasonic sensor, etc.

As shown, the platform **2038** may include a conveyer assembly **2046**. The conveyer assembly **2046** may be disposed at the top of the platform **2038** and may serve as a rest for a bag **26** as the bag **26** is displaced throughout a system **10**. The conveyer assembly **2046** may be driven to displace a bag **26** in a direction generally perpendicular to the first and second displacement axes. In the example shown, the conveyer assembly **2046** is oriented so as to displace a bag **26** along an axis in a plane perpendicular to the first and second axis but not perpendicular to the first and second axis. Thus, a bag **26** on a bag carriage **2000** may be displaced along three axes. In some embodiments, the conveyer assembly **2046** may be driven to feed a bag **26** off of the bag carriage **2000** and into an output chute **2024** (see, e.g., FIG. **252**) of the system **10**.

A set of port graspers **2044**A, B may also be coupled to the platform **2038**. In the example shown, each of the port graspers **2044**A, B includes an immobile jaw **2048** and a displaceable jaw **2050**. The port graspers **2044**A, B, may be actuated such that the displaceable jaws **2050** are displaced (e.g. pivoted) between an open position and a grasping position (shown). The displaceable jaws **2050** may include one or more retention recess **2052** within which ports **1654** of a bag **26** may be disposed when the port graspers **2044**A, B are in the grasping position. The first and second port graspers **2044**A, B may be spaced apart from one another so as to form a gap between the first and second port graspers **2044**A, B. Spacing of the first and second port graspers **2044**A, B may be selected such that jaws **2132**A, B of a welding assembly **2130** (see, e.g., FIG. **266**) may be disposed between the two port graspers **2044**A, B.

As shown, the conveyer assembly **2048** is oriented so as to slope downward from the port graspers **2044**A, B. This may facilitate displacement of a filled bag **26** into an output chute **2024** disposed on a side of the bag carriage **2000** opposite the port graspers **2044**A, B. Additionally, due to gravity, this may cause fluid filled into the bag **26** to tend to flow to the side of the bag **26** opposite the ports **1654** which may help to simplify filling.

An example bag feeder **1622** which may be included in the system **10** of FIG. **252** is shown in FIG. **256**. The example bag feeder **1622** includes a hopper assembly **2060**. The hopper assembly **2060** may include a number of walls which may define a channel **2064**. Clips **1700** on which bags **26** are retained may be fed into the hopper assembly **2060** and into the channel **2064**. In the example embodiment, the hopper assembly **2060** is oriented such that clips **1700** and the bags **26** retained thereon may be gravity fed through the channel **2064** of the hopper assembly **2060**. When the hopper assembly **2060** is filled with clips **1700** (only one shown in FIG. **256**), bags **26** may stack one above the other with each bag **26** (or at least the ports **1654** of each bag **26**) in a substantially horizontal orientation. This may be particularly desirable where bags **26** are moved throughout a system **10** in a horizontal orientation as the bags **26** may be presented from the bag feeder **1622** already in this orientation. That said, gravity feed bag feeders **1622** such as that shown in FIG. **256** may be included in other system **10** embodiments described herein such as those shown in FIG. **56**, FIG. **111**, and FIG. **178**. Additionally, in some embodiments, multiple bag feeders **1622** may be included in a system **10** (e.g. such as that shown in FIG. **252**). Each bag feeder **1622** may be arranged to hold clips **1700** for different bag **26** varieties (e.g. bags **26** with different fill capacities, different numbers or arrangements of ports **1654**, etc.).

The bag feeder **1622** may also include a sensing assembly **2070**. The sensing assembly **2070** may monitor the number of clips **1700** stored in the hopper assembly **2060** and may also be referred to herein as a hopper fill level sensor assembly **2070**. In some embodiments, the sensing assembly **2070** may include an ultrasonic sensor though any suitable sensor type may be used in alternative embodiments. In some embodiments, the sensor assembly **2070** may be a laser rangefinder. Alternatively, the sensor assembly **2070** may include a load cell which may monitor weight of the contents of the hopper assembly **2060** to determine a number of bags **26** contained in the hopper assembly **2060**. A plunger or the like could be included in hopper assembly **2060** and may press against the last clip **1700** in the hopper assembly **2060**. As the hopper assembly **2060** is depleted, the location of the plunger may change. This location may be monitored by a sensor assembly **2070** including a linear potentiometer, encoder, or linear variable differential transformer, etc. The control system **15** of the system **10** may receive data from the sensing assembly **2070** and may monitor the data to determine when the hopper assembly **2060** has been emptied or is approaching an empty state. The control system **15** may generate a user perceptible notification to the user (e.g. image or animation on a user interface) when the sensor assembly **2070** data indicates that the hopper assembly **2060** needs to be reloaded.

The bag feeder **1622** may include a support assembly **2062** upon which the bag **26** retained on a foremost clip **1700** in the hopper assembly **2060** may rest. The support assembly **2062** may include an arm **2066** which may be stationary and fixedly mounted to an immobile portion of the system **10**. A number of rollers **2068** may be coupled to the arm **2066**. Alternatively, a solid plate may be used instead of rollers. In such embodiments, the side of the plate opposite the arm **2066** may include a rail or wall which extends along at least a portion of the plate. The rail or wall may help align the bags on the support assembly **2062**.

The bag feeder **1622** may also include a clip ejector assembly **2072**. The clip ejector assembly **2072** may be actuated to remove the foremost clip **1700** in the hopper assembly **2060** once the bag **26** retained on the clip **1700** has been collected by the port graspers **2044**A, B of the bag carriage **2000**. The clip ejector assembly **2072** may also aid in locating a next clip **1700** within the hopper assembly **2060** into a prescribed position at the output end of the hopper assembly **2060**. The clip ejector **2072** will be further described later in the specification.

Referring now to FIG. **257-258**, two perspective views of an exemplary clip **1700** are depicted. As shown, the clip **1700** may include a main body **2074** which may extend from a first end **2076** of the clip **1700** to an opposing second end **2078** of the clip **1700**. A first face **2080** of the clip **1700** may include a number of retention cradles **2082**. The first face

2080 of the clip 1700 may be an underside of the clip 1700 when the clip 1700 is placed into a hopper assembly 2060 (see, e.g., FIG. 256). Ports 1654 of a bag 26 may be retained in the retention cradles 2082 to couple a bag 26 to the clip 1700. In the example embodiment, retention cradles 2082 are arranged such that ports 1654 may engage with the cradles 2082 via a snap fit. Each port 1654 may engage with at least one retention cradle 2082 defined on the clip 1700. Certain ports 1654 (e.g. longer ports 1654) may be engaged with multiple retention cradles 2082 at various points along their length. In the example embodiment, the clip 1700 is arranged to engage a three port 1654 bag 26. Other clips 1700 may include a different number or arrangement of retention cradles 2082 than that shown. The first face 2080 of the clip 1700 may also include at least one support cradle 2084. The support cradle(s) 2084 may form a rest where an expanse of port 1654 tubing may lay and may aid in keeping longer ports 1654 from bowing or bending. The support cradle 2084 is disposed between two guide clips 2087. A portion of a port 1654 may be snap fit into the guide clips 2087 and may further aid in ensuring that a longer port 1654 is held straight on the clip 1700. The first face 2080 of the clip 1700 may also include a recess 2092 along a portion of the second end 2078 of the main body 2074 where a notch 2094 is cut into the second end 2078.

A second face 2086 of the main body 2074 may include a set of spacers 2088. The second face 2086 may be disposed opposite the first face 2080 of the main body 2074 and may be a top face of the clip 1700 when the clip 1700 is installed in the hopper assembly 2060. The spacers 2088 may act as standoffs upon which other clips 1700 may sit when installed in hopper assembly 2060. The spacers 2088 may be ridges or ribs which may extend from the first end 2076 of the main body 2074 to the second end 2078 of the main body 2074. Each spacer 2088 may be disposed intermediate two retention cradles 2082 on the opposing side of the clip 1700. This may ensure that ports 1654 of a bag 26 retained on an above clip 1700 within a hopper assembly 2060 do not sit on the spacers 2088. This may help to increase the number of clips 1700 which may be installed into a hopper assembly 2060 (see, e.g., FIG. 256).

The main body 2074 of the example clip 1700 may be at least partially flanked by a set of wing bodies 2090. The wing bodies 2090 may be connected to the main body 2074 and may extend parallel to the main body 2074 along a plane between the second face 2086 and the portion of the spacers 2088 most proud of the second face 2086. Each of the wing bodies 2090 may extend from the second end 2078 of the main body 2074 to a point on the main body 2074 short of the first end 2076. Each wing body 2090 may include a fenestration 2096.

Referring now to FIG. 259, an example embodiment of an ejector sled 2098 is depicted. The ejector sled 2098 may be included in a clip ejector assembly 2072 of a bag feeder 1622. As shown, the ejector sled 2098 may include a set of ejector fingers 2100A, B. The ejector fingers 2100A, B may extend substantially parallel to one another within the same plane. The ejector fingers 2100A, B may each include a ramped end section 2102. The ramped end sections 2102 may be sloped such that the ejector fingers 2100A, B increase in thickness as distance from the end of the ejector finger 2100A, B increases. A catch ledge 2104 which generates a stepwise change in thickness of each ejector finger 2100A, B may be included at the thick end of each ramped end section 2102.

The ejector fingers 2100A, B may be separated and spaced from one another by a cross piece 2106. The ejector fingers 2100A, B may each be coupled to the cross piece 2106 via a pivot pin 2116. Thus, the ejector fingers 2100A, B may pivot with respect to the cross piece 2106 about the pivot pins 2116. A ram body 2108 may be disposed on the cross piece 2106 and may extend toward the ramped end sections 2102 of the ejector fingers 2100A, B. The ram body 2108 may include a wedge shaped portion which may cooperate with the notch 2096 in the second end 2078 of the main body 2074 of the clip 1700 (see, e.g., FIG. 258). The ejector fingers 2100A, B may also be separated and spaced from one another by a second cross piece 2110. A mounting arm 2112 may be attached to the cross piece 2106 on which the ram body 2108 is included. The mounting arm 2112 may be coupled to the other of the cross pieces 2110 via a bias member 2114. The bias member 2114 may for example be a coil spring such as an extension spring. The bias member 2114 may bias the ejector fingers 2100A, B to a home position. When the ejector fingers 2100A, B pivot about the pivot pins 2116 away from the home position, the bias member 2114 may become stressed. As the bias member 2114 restores to a less stressed state, the ejector fingers 2100A, B may automatically be caused to pivot back to the home position about the pivot pins 2116. Referring now also to FIGS. 260-261, the mounting arm 2112 may be coupled to an actuator 2120 (e.g. pneumatic, hydraulic, electromechanical) of the clip ejector assembly 2072. The actuator 2120 may be powered by a control system 15 of the system 10 to displace the mounting arm 2112 and the ejector sled 2098 attached thereto along a displacement axis. As shown, the mounting arm 2112 and ejector sled 2098 may be displaced between an advanced position (FIG. 260) and a retracted position (FIG. 261) with respect to the hopper assembly 2060. When in the advanced position, the ejector fingers 2100A, B may project into the channel 2064 of the hopper assembly 2060. The ramped end sections 2102 of the ejector fingers 2100A, B may be disposed in the fenestrations 2096 of the wing bodies 2090 of the foremost clip 1700. The ram body 2108 may be disposed within the notch 2094 in the second end 2078 of the clip 1700. As the notch 2094 and ram body 2108 include cooperating wedge shapes, this may help to center the clip 1700 within the hopper assembly 2060. The ends of the wing bodies 2090 most proximal the first end 2076 of the clip 1700 may abut the walls of the channel 2064. This may further help to ensure that the clip 1700 is in a prescribed location within the hopper assembly 2060.

Referring now again to FIG. 255 as well as FIGS. 260-261, since the clip 1700 may be in a prescribed location within the hopper assembly 2060 this may allow the port graspers 2044A, B of the bag carriage 2000 to be displaced to a preset location to collect the bag 26 retained on the clip 1700. In certain examples, the port graspers 2044A, B may be opened and the immovable jaws 2048 may be placed between ports 1654 of the bag 26 and the main body 2074 of the clip 1700. The port graspers 2044A, B may be actuated to a closed position. The platform 2038 of the bag carriage 2000 may then be actuated toward the base 2030 of the bag carriage 2000 to strip the ports 1654 out of the retention cradles 2082 and any guide clips 2087 on the clip 1700.

Referring now primarily to FIGS. 261 and 259, to remove the empty clip 1700, the mounting arm 2112 and the ejector sled 2098 may be displaced via the actuator 2120 to the retracted position. As the ejector sled 2098 is driven away from the hopper assembly 2060, the catch ledge 2104 on each ejector finger 2100A, B may abut and catch against an edge of an associated one of the fenestration 2096 in the

wing bodies **2090** of the clip **1700**. Further retraction of the ejector sled **2098** may cause the clip **1700** to be dragged along with the ejector sled **2098** and out of the hopper assembly **2060**. The clip **1700** may then fall from the ejector sled **2098** into a receptacle **2122** (see, e.g., FIG. **253**), waste chute, or other waste retention or collection arrangement.

Upon actuation of the ejector sled **2098** back to the advanced position, the ramped end sections **2102** of the ejector fingers **2100**A, B may contact the second end **2078** of the next clip **1700**. The ramped end sections **2102** may be sloped so as to ride over the second end **2078** and cause pivoting of the ejector fingers **2100**A, B about the pivot pins **2116**. This may also stress the bias member **2114**. The bias member **2114** may restore to a less stressed state and cause the ejector fingers **2100**A, B to return to the home position when the ramped end sections **2102** reach the fenestrations **2096** of the wing bodies **2090**.

In alternative embodiments, the ejector fingers **2100**A, B may be rigidly attached to at least one of the cross pieces **2106**. The ejector fingers **2100**A, B may not pivot, but may instead resiliently deflect. As the ejector sled **2098** is displaced toward the advanced position, the ejector fingers **2100**A, B may bend to allow the ramped end sections **2102** to ride over the second end **2078** of the clip **1700**. The ejector fingers **2100**A, B may restore to an undeflected state when the ramped end sections **2102** reach the fenestrations **2096**.

Referring now to FIG. **262**, a perspective view of an example fill conduit dispenser **1050** is depicted. The fill conduit dispenser **1050** may include a guide portion **1052** and a reel portion **1054**. The guide portion **1052** and a reel portion **1054** may be as described in relation to FIGS. **237-238**. An organizer **1058** (see FIG. **238**) may be disposed within the reel portion **1054**. A portion of the fill conduit **1060** which extends to the mixing circuit **348** (see, e.g., FIG. **215**) may enter into the reel portion **1054** via the inlet orifice **1066**. As mentioned above, the fill conduit **2018** within the conduit dispenser **1050** may come pre-primed and sterile. The fill conduit **2018** may be provided in a sealed state such that the interior of the fill conduit **1060** and the fluid contained therein is out of communication with the surrounding environment. In alternative embodiments, the fill conduit **2018** may be evacuated to collapse the conduit **2018** and sealed in a sterile state. In still other embodiments, the fill conduit **2018** may be welded to a disinfect reservoir (5-20 L bag) or drain line and hot water may be delivered through the fill conduit **2018** to disinfect the fill conduit **2018** after a new conduit dispenser **1050** is installed in the system **10**.

The conduit dispenser **1050** may include a mounting body such as a rail **2240** for mounting of the reel portion **1054** to a dispenser carriage **2242**. The carriage **2242** may include a track **2244** within which the rail **2240** may be installed. In some embodiments, the track **2244** may include one or more spring loaded detent pin. The rail **2240** may include a recess which the detent pin may snap into when the conduit dispenser **1050** is loaded into the track **2244**. This may aid in retaining the conduit dispenser **1050** in place on the carriage **2242** and help resist jostling of the conduit dispenser **1050** as the carriage **2242** is displaced about the system **10** via the dispenser transport assembly **2014**.

The dispenser carriage **2242** may be a part of the dispenser transport assembly **2014** (a portion of which is shown in FIG. **262**). The carriage **2242** may be displaced along a rail **2243** of the dispenser transport assembly **2014** such that the conduit dispenser **1050** may be moved from the welding station **2006** to the weld opening station **2016** and separating station **2020**. The carriage **2242** may also include a conduit support projection **2248**. The conduit support projection **2248** may include a flange **2250** with a retention notch **2252** at a terminal end thereof. When a new conduit dispenser **1050** is loaded into the system **10**, the end of the fill conduit **2018** may be closed by a sealing element such as a cap **2254**.

Referring now also to FIG. **263**, a cross section through a cap **2254** disposed on a terminal end of a fill conduit **2018** is shown. The cap **2254** may include a first portion **2256** and a second portion **2258**. The first and second portion **2256**, **2258** may be frictionally held together and may be separable from one another. As shown, the first portion **2256** may include a compliant member **2266** (e.g. o-ring) which may compress against an interior face **2268** of the second portion **2258**. Compression of the compliant member **2266** against the second portion **2258** may help to hold the first portion **2256** and second portion **2258** of the cap **2254** together.

The first portion **2256** may be a plug body which may extend into and seal the lumen of the terminal end of the fill conduit **2018** from the surrounding environment. The second portion **2258** may be a guide loop which may surround the fill conduit **2018**. As shown, the exterior face **2260** of the second portion **2258** may include recess **2262** which may be seated into the retention notch **2252** of the flange **2250** on the conduit support projection **2248**. Thus, the fill conduit **2018** may be routed out of the conduit dispenser **1050**, along the conduit support projection **2248** and docked into the flange **2250**.

A grasper may grasp the first portion **2256** of the cap **2254** and pull on the fill conduit **2018** to separate the first and second portion **2256**, **2258** of the cap **2254**. The first portion **2256** may remain in sealing engagement with the terminal end of the fill conduit **2018** and the fill conduit **2018** may be pulled along with the first portion **2256** of the cap **2254** through the second portion **2258** of the cap **2254**. The second portion **2258** may remain retained in the retention notch **2252** of the flange **2250** and may act as an eyelet through which the fill conduit **2018** may be advanced and guided as fill conduit **2018** is consumed by the system **10**. Second portion **2258** may include a dispensing end **2269** and a feed end **2267**. The feed end **2267** may be disposed upstream of the dispensing end **2269**. The feed end **2267** (that most proximal to the conduit dispenser **1050**) of the second portion **2258** may taper or flare outward as distance from the dispensing end **2269** increases. In the example embodiment, the feed end **2267** may increase in diameter as distance from the dispensing end **2269** increases. This may aid in prevent snagging of the fill conduit **2018** as fill conduit **2018** is advanced through the second portion **2258**.

As the second portion **2258** may be held in a fixed position on the conduit support projection **2248**, the second portion **2258** may help to ensure that a portion of the fill conduit **2018** near the terminal end of the fill conduit **2018** is in a known location. This may allow various graspers of the system **10** to be displaced to a coordinate corresponding to the known location to facilitate grasping of the fill conduit **2018**.

Referring now to FIG. **264**, a block diagram of an example welding station **2006** is depicted. Once a bag **26** has been collected from the bag feeder **1622** (see, e.g., FIG. **256**) by the bag carriage **2000**, the bag carriage **2000** may be displaced along the carriage transport assembly **2004** to the welding station **2006**. As shown, the welding station **2006** may include a welding assembly **2130**. The welding assembly **2130** may include a set of opposed jaws **2132**A, B and a cutting assembly **2137**. The welding assembly **2130** may be actuated via commands issued by the control system **15**

to capture a portion of a fill conduit **2018** and port **1654**, cut the fill conduit **2018** and port **1654**, and join the fill conduit **2018** to the port **1654**.

As shown, at least one of the opposing jaws **2132**A, B may be paired with at least one sensor **2133** which may monitor for the presence of a tube (e.g. port **1654** or fill conduit **2018**) within the jaws **2132**A, B. In some embodiments, each jaw **2132**A, B may include a sensor **2133** which may monitor for the port **1654** and a sensor **2133** which may monitor for the fill conduit **2018**. The sensors **2133** may be optical sensors such as reflectivity based sensors which may monitor the jaws **2132**A, B via windows **2131** extending though each of the jaws **2132**A, B.

The welding station **2006** may also include a port manipulator **2138** and a fill conduit manipulator **2140**. The port manipulator **2138** and fill conduit manipulator **2140** may respectively aid in locating the port **1654** and fill conduit **2018** into position within the welding assembly **2130**. The port manipulator **2138** and fill conduit manipulator **2140** may grasp the terminal ends of the fill conduit **2018** and port **1654** as the port **1654** and fill conduit **2018** are cut. Thus, the scrap generated during cutting may be retained in the port manipulator **2138** and fill conduit manipulator **2140** after cutting. End effectors **2141**, **2142** of the port manipulator **2138** and fill conduit manipulator **2140** may be displaced to a scrap receptacle, waste chute, or the like to discard the cut terminal ends of the tubing. A cleaning assembly **2143** may also be included in the welding station **2006** and may be used to clean the cutting assembly **2137** periodically.

Still referring to FIG. **264**, each of the jaws **2132**A, B may include a set of troughs **2134**A, B. The troughs **2134**A, B may extend across opposing faces **2146** A, B of the jaw **2132**A, B. The troughs **2134**A, B may include a port retention trough **2134**A and a fill conduit retention trough **2134**B in certain embodiments. At least one of the jaws **2132**A, B may be displaceable with respect to the other of the jaws **2132**A, B. In the example embodiment, the first jaw **2132**A may be displaceable, via operation of at least one jaw drive actuator **2144**A, B (e.g. pneumatic, hydraulic, electromechanical), along a displacement axis. The displacement axis may be oriented perpendicular to the faces **2146**A, B of the jaws **2132**A including the troughs **2134**A, B. The first jaw **2132**A may be displaced toward the second jaw **2132**B along the displacement axis until opposing faces **2146**A, B of the jaws **2132**A, B come into contact. When the first jaw **2132**A is in contact with the second jaw **2132**B, the jaws **2132**A, B may be considered to be in a closed state. When the first and second jaws **2132**A, B are spaced from one another, the jaws **2132**A, B may be considered to be in an open state.

Referring now also to FIG. **265**, a perspective view of an exemplary embodiment of the welding assembly **2130** of FIG. **264** is depicted. The jaws **2132**A, B of the welding assembly **2130** are shown in the open position in FIG. **265**. As shown, each of the jaws **2132**A, B may be divided into a first jaw unit **2148** and a second jaw unit **2150**. The first and second jaw unit **2148**, **2150** may be separated from one another by a gap. As described later, this gap may be closeable by displacement of at least one of the first and second jaw units **2148**, **2150** of each jaw **2132**A, B against or at least toward the other. The gap may be sized to accept a cutting element **2136** of the cutting assembly **2137**.

The cutting element **2136** may be displaced toward the jaws **2132**A, B and into the gap via a cutting actuator **2154** (e.g. pneumatic, hydraulic, electromechanical) of the cutting assembly **2137**. As shown, the cutting assembly **2137** may also include a heater element **2139** which may be powered by the control system **15** to heat the cutting element **2136**. At least one temperature sensor **2135** in data communication with the control system **15** may be included in the cutter assembly **2137**. Powering of the heater element **2139** may be governed by the control system **15** and may be based at least partially on data received from the at least one temperature sensor **2135**. The cutting element **2136** may be a coated metal body. The coating may be a ceramic coating or a NEDOX coating such as any of those described elsewhere herein.

At least one of the first and second jaw units **2148**, **2150** of each jaw **2132**A, B may be displaceable with respect to the other jaw unit **2148**, **2150** of that jaw **2132**A, B. In the example embodiment, the second jaw unit **2150** of each jaw **2132**A, B may displace along a first and second axis which are substantially parallel to the faces **2146**A, B of the jaws **2132**A, B including the troughs **2134**A, B. The first and second axes may be oriented substantially perpendicular to one another. Each of the second jaw units **2150** may be coupled to one another via a linking assembly **2156**. The linking assembly **2156** may be driven by a first axis actuator **2158** (e.g. pneumatic, hydraulic, electromechanical) and a second axis actuator **2160** (e.g. pneumatic, hydraulic, electromechanical). Since the actuators **2158**, **2160** for the second jaw units **2150** act upon the linking assembly **2156**, each of the second jaw units **2150** may be displaced along their displacement axes in tandem with one another. The jaw drive actuator **2144**A for the second jaw unit **2150** of the first jaw **2132**A may also be displaced as the first axis actuator **2158** and second axis actuator **2160** are powered.

The second jaw units **2150** may have a displacement range along the first displacement axis from a first position to a second position. In some embodiment, stop members **2152** may be included in the welding assembly **2130** to prevent movement of the second jaw units **2150** beyond the displacement range defined for the first displacement axis. In the first position (shown in FIG. **265**), the portion of the port retention trough **2134**A in each jaw unit **2148**, **2150** and the portion of the fill conduit retention trough **2134**B in each jaw unit **2148**, **2150** may respectively be aligned (e.g. coaxial). In the second position, the portion of the fill conduit retention trough **2134**B in the second jaw units **2150** may be aligned with the portion of the port retention troughs **2134**A in the first jaw units **2148**.

The second jaw units **2150** may have a displacement range along the second displacement axis from a spread position to a compacted position. In the spread position, the gap between the first and second jaw units **2148**, **2150** may be present and may be at its widest. In the compacted positon, the gap between the first and second jaws **2132**A, B may be reduced or absent. In some embodiments, in the compacted position, the first and second jaw units **2148**, **2150** may be in abutment with one another. In other embodiments, the second jaw units **2150** may be driven toward the first jaw units **2148** by a distance equal to or slightly greater than the thickness of the cutting element **2136**.

Referring now to FIGS. **266-267**, a portion of the exemplary embodiment of the welding assembly **2130** shown in FIG. **265** is depicted with the jaws **2132**A, B in the closed state. As shown, each jaw unit **2148**, **2150** of the first jaw **2132**A may be coupled to an output body **2168** of an associated jaw drive actuator **2144**A, B. In the example embodiment, each jaw unit **2148**, **2150** of the first jaw **2132**A may be coupled to a respective output body **2168** via a set of fasteners **2170**. The fasteners **2170** may extend through the output bodies **2168** to couple into the jaw units **2148**, **2150**, but may not threadedly engage with the output

bodies **2168**. The output bodies **2168** may be displaceable with respect to the first and second jaw units **2148**, **2150** of the first jaw **2132**A. The output bodies **2168** may be displaceable from a position distal to the first and second jaw units **2148**, **2150** (see FIG. **266**) of the first jaw **2132**A to a position proximal to the first and second jaw units **2148**, **2150** of the first jaw **2132**A. The output bodies **2168** may displace along the length of the fasteners **2170** as the output bodies **2168** move relative to the jaw units **2148**, **2150** of the first jaw **2132**A. At least one bias member **2172** may be disposed between each of the first and second jaw units **2148**, **2150** and the respective output bodies **2168**. In the example embodiment, a compression spring is included surrounding each of the fasteners **2170**. The bias members **2172** may exert a bias force on the associated jaw unit **2148**, **2150** which urges the jaw units **2148**, **2150** to the distal position with respect to the output bodies **2168**.

As the actuators **2144**A, B displace the first jaw **2132**A against the second jaw **2132**B, the first jaw **2132**A may contact the second jaw **2132**B. The first and second jaw unit **2148**, **2150** may be held in the distal position by the bias members **2172** as this occurs. As shown, one or both of the jaws **2132**A, B may include at least one locating projection **2190**. In the example embodiment, locating projections **2190** which flank each of the troughs **3124**A, B are visible on the second jaw **2132**B. The at least one locating projection **2190** may be wedge shaped. The jaws **2132**A, B may include also include cooperating receiving recesses **2192** for each of the locating projections **2190** in the other of the jaws **2132**A, B. As the jaws **2132**A, B reach the closed position, the at least one locating projection **2190** may enter the associated receiving recess(es) **2192** in the opposed jaw **2132**A, B. As the locating projection(s) **2190** advance into the receiving recess(es) **2192**, the interaction of the locating projection(s) **2190** and receiving recess(es) **2192** may help to eliminate any misalignment of the jaws **2132**A, B. This may be attributable to the wedge shape of the locating projection(s) **2190**.

As the actuators **2144**A, B continue to actuate the output bodies **2168**, further movement of the first jaw **2132**A may be obstructed by the presence of the second jaw **2132**B. Thus, continued movement of the output bodies **2168** may advance the output bodies **2168** toward the first and second jaw units **2148**, **2150** of the first jaw **2132**A and the bias members **2172** may become compressed (see FIG. **267**). The output bodies **2168** may be in the proximal position with respect to the associated first and second jaw units **2148**, **2150** of the first jaw **2132**A when the jaw drive actuators **2144**A, B have finished actuation of the output bodies **2168** to the end of their displacement range.

Referring now to FIG. **268**, a cross section of FIG. **267** taken along the axes of the port retention troughs **2134**A of the first jaw units **2148** is shown. As shown, a port **1654** is in place within the port retention troughs **2134**A. The port **1654** may be held by the port graspers **2044**A, B of the bag carriage **2000**. A fill conduit **2018** would also be in position within the fill conduit retention troughs **2134**B of the jaws **2132**A, B. The terminal end of the fill conduit **2018** may be held by an end effector **2142** (e.g. grasper) of the fill conduit manipulator **2140**.

Each of the output bodies **2168** may include at least one occluder projection **2180**. In certain examples, each output body **2168** may include an occluder projection **2180** for each trough **2134**A, B. As the output bodies **2168** are displaced proximal to the jaw units **2148**, **2150** of the first jaw **2132**A, the occluder projections **2180** may project into the retention troughs **2134**A, B via cutouts **2184** in the jaw units **2148**, **2150** of the first jaw **2132**A. As this occurs, any tubing (e.g. fill conduit **2018** or, in the example cross-section, the port **1654**) may be collapsed or flattened such that the lumen through the tubing is closed. This may ensure, for example, that any liquid in the lumen is displaced out of a region of the tubing in order to help to facilitate welding.

Referring now to FIG. **269**, another cross section taken along the port retention troughs **2134**A of the first jaw units **2148** is shown. To weld the bag **26** to the fill conduit **2018**, the cutting element **2136** of the cutting assembly **2137** may be heated by the heater **2139** to a target cutting temperature and displaced into the gap between the first and second jaw units **2148**, **2150**. As this occurs, the cutting element **2136** may cut through the port **1654** and fill conduit **2018** by melting the port **1654** and fill conduit **2018** in the region collapsed by the occluder projections **2080**. There may be a gap between the occluder projections **2080** associated with each of the output bodies **2168** which is sized to accept the cutting element **2136**. Cutting of the port **1654** and fill conduit **2018** may sever the terminal ends of the port **1654** and fill conduit **2018** from the remaining portions of port **1654** and fill conduit **2018**. Since the port **1654** and fill conduit **2018** are flattened, substantially no liquid (e.g. water or saline) may be present in the lumens of these tubes. This may ensure that the liquid does not behave as a heat sink or boil due to the heat of the heated cutting element **2136**. Thus, flattening of the port **1654** and fill conduit **2018** may simplify cutting and welding of the port **1654** and fill conduit **2018**.

As the cutting element **2136** cuts through the port **1654** and fill conduit **2018**, the material of the port **1654** and fill conduit **2018** may melt against the faces of the cutting element **2136** such that a seal is formed and maintained against the face of the cutting element **2136** during the cutting action. This may prevent the interior lumens of the port **1654** and fill conduit **2018** from being exposed to the surrounding environment as they are cut.

Referring now to FIG. **270**, another cross section taken along the port retention troughs **2134**A of the first jaw units **2148** is depicted. With the cutting element **2136** disposed within the gap, the second jaw units **2150** of the jaws **2132**A, B may be displaced relative the first jaw units **2148** along the first displacement axis of the second jaw units **2150**. The second jaw units **2150** may be displaced until the fill conduit retention troughs **2134**B of the second jaw units **2150** are aligned or coaxial with the port retention troughs **2134**A of the first jaw units **2148**. In some embodiments, the second jaw units **2150** may be displaced until the second jaw units **2150** abut against a stop **2152** (see. e.g., FIG. **265**). This may align the remaining portions of the port **1654** and the fill conduit **2018** with one another in the jaws **2132**A, B.

Referring now to FIG. **271**, the second jaw units **2150** may be displaced along the second displacement axis (toward the first jaw units **2148**) as the cutting element **2136** is retracted. As a result, the previously aligned remaining portions of the port **1654** and the fill conduit **2019** may be driven toward one another. The remaining portions of the port **1654** and fill conduit **2018** may melt into each other and begin to form a bond as the cutting element **2136** is displaced out of the way. Thus, as the cutting element **2136** is removed, the remaining portions of the port **1654** and fill conduit **2018** may be pressed against one another such that a junction is formed while keeping their interiors isolated from the surrounding environment. In certain examples, the cutting element **2136** may never be contacted by the jaw units **2148**, **2150** as the second jaw units **2150** are displaced toward the first jaw units **2148**. This may ensure that the

jaws **2132**A, B do not get excessively hot (e.g. hot enough to melt tubing seated in the troughs **2134**A, B) during the welding operation. This may also help to preserve any coating on the surface of the cutting element **2136** from getting scratched against the jaws **2132**A, B.

Once the joint between the port **1654** and fill conduit **2018** is formed, the jaws **2132**A, B may then be actuated open by the jaw drive actuators **2144**A, B. The joined port **1654** and fill conduit **2018** may be removed from the jaws **2132**A, B by the port graspers **2044**A, B of the bag carriage **2000**. The bag carriage **2000** may then be displaced along the carriage transport assembly **2004** to the weld opening station **2016**. An end effector **2141** of the port manipulator **2138** (see, e.g., FIG. **264**) may grasp the severed terminal end of the port **1654** after the port **1654** has been cut, but before the jaws **2132**A, B have been opened. As mentioned above, the end effector **2142** of the fill conduit manipulator **2140** may also be grasping the severed terminal end of the fill conduit **2018**. The port manipulator **2138** and fill conduit manipulator **2140** may displace the scrap ends of the port **1654** and fill conduit **2018** respectively to a discard location (scrap receptacle, waste chute, etc.) within the system **10**.

Referring now to FIG. **272**, an example embodiment of a cleaning assembly **2143** is depicted. The cutting element **2136** may be displaced to the cleaning assembly **2143** such that any residual tubing material may be removed off of the surface of the cutting element **2136**. This may be done, for example, each time a preset number of welds have been performed at the welding assembly **2130**.

As shown, the cleaning assembly **2143** may include at least one set of cleaning elements **2270**. The cleaning elements **2270** may include at least one pair of brushes. Other embodiments may include a series of brush pairs. For illustrative purposes, the brushes as depicted as cylindrical bodies in FIG. **272**. The brushes may be positioned such that the brushes may slightly extend into and intermesh with one another. The brushes may be metal wire brushes or polymer brushes in certain embodiments. In some embodiments, the brushes may be nylon bristled brushes. Preferably, the brush material may be selected so as to not damage any coating on the cutting element **2136**.

The cleaning assembly **2143** may include a drive motor **2272** which may be coupled to a gearbox **2274**. Each of the cleaning elements **2170** may be mounted to an output shaft **2176** extending from the gearbox **2174**. The gearbox **2174** may be arranged such that the output shafts **2176** and the attached cleaning elements **2170** counter rotate with respect to one another when the drive motor **2172** is powered.

To clean a cutting element **2136**, the cutting assembly **2137** may be displaced to the cleaning station **2143** via a cleaner actuator **2278** (e.g. pneumatic, hydraulic, electromechanical, see FIG. **265**). The cutting element **2136** may then be displaced between the cleaning element **2170** and the drive motor **2172** may be powered to rotate the cleaning elements **2170**. As the cleaning elements **2170** rotate, any residual polymer on the faces of the cutting element **2136** may be rubbed off of the cutting element **2136**. The cleaner actuator **2278** may displace the length of cutting element **2136** back and forth between the cleaning elements **2170** to ensure that the entirety of the cutting element **2136** is cleaned.

Referring now to FIG. **273** and FIG. **274**, two block diagrams of a weld opening station **2016** are depicted. As shown, the joined fill conduit **2018** and port **1654** are positioned between a support plate **2202** and a compression element **2204**. The joined fill conduit **2018** and port **1654** are specifically seated against a raceway **2200** of the support plate **2202**. The flow lumen **2210** in the area of the joint **2206** between the fill conduit **2018** and port **1654** is shown partially blocked by an obstruction **2208** in FIG. **273**. Such an obstruction may occasionally be generated by excessive bonding of the flattened tubing as the tubing is welded in the welding assembly **2130**.

Still referring to FIGS. **273-274**, to break the obstruction and reopen the lumen **2210**, the fill conduit dispenser **1050** and bag carriage **2000** (only the port graspers **2044**A, B are shown in FIGS. **273-274** for ease of illustration) may be displaced from the weld station **2006** to the weld opening station **2016**. The fill conduit dispenser **1050** and the port graspers **2044**A, B may be moved such that the joined fill conduit **2018** and port **1654** are positioned in the raceway **2200** (see FIG. **273**). The compression element **2204** may be displaced away from the support plate **2202** via an actuator **2214** (e.g. a linear actuator) to create a space for the joined fill conduit **2018** and port **1654** to be displaced into position against the raceway **2200**.

The compression element **2204** (e.g. a roller) may then be driven over the joined fill conduit **2018** and port **1654** via powering of an actuator **2212**. This may compress the tubing against the raceway **2200**. As this occurs, stress may be exerted on the bond forming the obstruction **2208**. This stress may disrupt the bond to remove the obstruction **2208** (see FIG. **274**). Thus, the lumen **2210** may be reopened without disrupting the integrity of the joint **2206** between the filling conduit **2018** and port **1654**. The bag **26** may be filled after the obstruction has been removed **2208**.

In certain embodiments, the compression element **2204** may be displaced from the fill conduit port **1654** side of the joint **2206** toward the port fill conduit side of the joint **2206**. This may be desirable as the fill conduit **2018** may typically be full of incompressible fluid. The length of fill conduit **2018** stored in the fill conduit dispenser **1050** may have sufficient compliance to accept any of the displaced fluid. Displacing of the compression element **2204** from the fill conduit **2018** of the joint **2206** toward the port **1654** may cause an undesirable amount of stress on the joint **2206** as the incompressible fluid is driven into the obstruction **2208**.

Referring now to FIG. **275**, an exemplary embodiment of the weld opening **2016** shown in FIGS. **273-274** is depicted. As shown, the support plate **2202** may be mounted to a stationary body **2216** included in the system **10**. The compression element **2204** (a roller in the example embodiment) may be mounted on a boom **2218** coupled to an output of a rotary actuator **2212**. The rotary actuator **2212** may be coupled to a mounting plate **2220**. The mounting plate **2220** may be coupled to at least one linear actuator **2214** (two are shown in FIG. **275**). Two linear actuators **2214** are shown in the example embodiment. One of the linear actuators **2214** may be replaced with a guide along which the mounting plate **2220** may slide in alternative embodiments. The linear actuator **2214** may be powered to displace the rotary actuator **2212**, boom **2218**, and compression element **2204** along a displacement axis oriented perpendicular to support plate **2202**. As the rotary actuator **2212** is powered, the boom **2218** and compression element **2204** may be swung about a pivot axis of the output shaft **2222** of the rotary actuator **2212**. When the compression element **2204** is against the raceway **2200** of the support plate **2202**, the compression element **2204** may be swung along the length of the raceway **2200**. The compression element **2204** may include raise regions **2205**. The raised regions **2205** may ride along grooves **2207** in the support plate **2202** which may serve to guide the compression element **2204** along the raceway **2200**.

Referring now also to FIG. **276**, a perspective view of an example support plate **2202** is depicted. As shown, the raceway **2200** may include a flat portion **2224** and a fluted portion **2226** which may include at least one flute **2228**. The width of the flute **2228** may increase as proximity to the edge of the support plate **2202** decreases. As the joined fill conduit **2018** and port **1654** are displaced to against the support plate **2202**, the tubing may be nocked into place within the flute **2228** to aid in positioning the tubing. The compression element **2204** may then be driven over the joint **2206** between the fill conduit **2018** and port **1654** to disrupt any obstruction **2208**. As the boom **2218** is swung to drive the compression element **2204** over the fill conduit **2018** and port **1654**, the support plate **2202** may be held stationary. The mounting plate **2220** may displace away from and back towards the support plate **2202** as this occurs to accommodate the pivotal motion of the boom **2218** and compression element **2204** about the output shaft **2222** of the rotary actuator **2212**.

Referring now to FIG. **277**, a block diagram of an example separating station **2020** of a system **10** is shown. The separating station **2020** may include a dissociating assembly **2300**. The dissociating assembly **2300** may receive a length of conduit **2305** including a joint **2206** (see, e.g., FIG. **274**). The joint **2206** may be created by attaching a first conduit to a second separate conduit. For example, the length of conduit **2305** may be formed from a fill conduit **2018** which has been welded to the port **1654** of a bag **26** in a welding assembly **2030** (see, e.g., FIG. **265**). The dissociating assembly **2300** may create sealed regions in the length of conduit **2305** on each side of the joint **2206** and may cut through the regions of the conduit **2305** where the seals are formed. Thus, the first conduit (e.g. fill conduit **2018**) and second conduit (e.g. port **1654** of a bag **26**) may be dissociated from one another. Due to the seals, cutting may be performed without exposing the interior of the length of conduit **2305** to the environment and any controlled environment in the interior lumen of the conduit **2305** may be maintained.

During cutting of the length of conduit **2305**, a span of conduit including the joint **2206** may be exsected from the length of conduit **2305** as scrap. Cuts in the conduit **2305** may be made in central portions of the sealed regions. As a result, the terminal ends of the dissociated first and second conduit may be sealed in addition to the ends of the scrap conduit span **2350** (see. e.g., FIG. **289**). Preferably, the scrap conduit span **2350** may be cut as short as is practicable so as to minimize the amount of the first and second conduit which is consumed during the cutting operation.

As shown, the dissociating assembly **2300** may include a first die block **2302**A and second die block **2302**B. The die blocks **2302**A, B may both include a die **2306**. Each of the dies blocks **2302**A, B may be disposed in opposition to one another. At least one of the die blocks **2302**A, B may be displaceable with respect to the other. The die blocks **2302**A, B may be displaceable from an open position (shown in FIG. **277**) in which the die blocks **2302**A, B are spaced apart from one another to a closed position (see, e.g., FIG. **281**) in which the dies **2306** on each die block **2302**A, B are driven together. In the example embodiment, the first die block **2302**A is depicted coupled to an actuator **2304**. The actuator **2304** may displace the first die block **2302**A along a displacement axis toward and away from the second die block **2302**A, B to transition the die blocks **2302**A, B between the open and closed positions. The second die block **2302**B may be stationary and may be mounted to an immobile portion of the system **10**. In alternative embodiments, each die block **2302**A, B may be mounted to a respective actuator and each die block **2302**A, B may be displaced during opening and closing of the dissociating assembly **2300**.

Each of the dies **2306** may thermally communicate with at least one heating element **2308**. In some examples, the heating elements **2308** may be physically attached to the backsides of the die **2306**. In alternative embodiments, the dies **2306** may be fastened to the die blocks **2302**A, B so as to compressively sandwich each heating element **2308** between a die block **2302**A, B and a die **2306**. Thermal paste may be included on each side of the heating element **2308**. The heating elements **2308** may be high watt density heating elements which may be powered to rapidly heat the associated die **2306** to a desired temperature. In some embodiments, the heating elements **2308** may be heated to the temperature set point in 3-10 seconds (e.g. 4-5 seconds). The heating elements **2308** used may be ceramic material heating elements with high thermal conductivity and high resistivity. For example, the heating elements **2308** may be Aluminum nitride heaters or Boron nitride heaters.

Power to the heating elements **2308** may be governed by a control system **15** which may be in data communication with at least one temperature sensor **2310** monitoring the temperature of dies **2306**. In various embodiments, each die **2306** may be monitored by one or more temperature sensor **2310** which may be mounted to or in a receptacle of each die **2306**. The temperature sensors **2310** may be resistance temperature detectors in certain examples though other varieties of temperature sensors may be used. The control system **15** may command power to the heating elements **2308** based on data from the temperature sensors **2310** to heat the die **2306** to a predetermined heating temperature set point. The heating temperature set point may be dependent on the conduit **2305** material and the desired cycle time. Where a PVC conduit **2305** is used, the heating temperature set point may be between 145°–160° C. Higher temperatures may shorten the duration of the sealing and cutting operation. For example, at about 160° C. cutting and sealing may be completed in about one second.

The dissociating assembly **2300** may also include at least one cooling assembly **2312** in thermal communication with each of the dies **2306**. In the example embodiment, a cooling assembly **2312** for each die block **2302**A, B is depicted. Each of the cooling assemblies **2312** may include at least one cooling fan **2314** and at least one heat sink **2316**. The heat sinks **2316** may include a plurality of fins and at least one heat pipe **2315**. The heat sink(s) **2316** of each cooling assembly **2312** may include a conductive baseplate **2317** which may be coupled to one of the die blocks **2302**A, B via a thermal adhesive or thermal paste. The cooling assemblies **2312** may be fastened to the die blocks **2302**A, B such that the conductive baseplates **2317** are compressively sandwiched between the die blocks **2302**A, B and the rest of each respective cooling assembly **2312**. The cooling fans **2314** may be any suitable cooling fan. In certain embodiments, the cooling fans **2314** may be CPU cooling fans. In some embodiments, the cooling fans **2314** may have an CFM rating of at least 70 (e.g. **75**).

The cooling assemblies **2312** may be capable of rapidly cooling the dies **2306** after cutting and formation of sealed regions within the conduit **2305**. The control system **15** may orchestrate powering of the cooling fans **2314** based on data from the temperature sensors **2310** to cool the dies **2306** to a predetermined cooling temperature set point (e.g. 70°–100° C.). The decrease in temperature between the heating temperature set point and the cooling temperature set point may be between 45°–90° C. The cooling temperature set

point may depend on the type of material from which the conduit **2305** is formed. In certain examples, the cooling assemblies **2312** may cool the dies **2306** to a temperature at which the conduit **2305** may be removed from the dissociating assembly **2312** in 5-15 seconds (e.g. 8-12 seconds).

As shown in FIG. **277**, the displaceable die block **2302**A may include a stop projection **2318**. The stop projection **2318** may be formed adjacent or as part of the die **2306** of the first die block **2302**A. The separating station **2020** may include a scrap retainer assembly **2324**. The scrap retainer assembly **2324** may include a scrap retainer element **2320** and a scrap retention actuator **2322**. As shown, the scrap retention assembly **2324** may be coupled to the first die block **2302**A such that the scrap retention assembly **2324** moves in tandem with the first die block **2302**A. The scrap retainer element **2320** may be driven by the scrap retention actuator **2322** from a retracted position distal to the dies **2306** (shown in FIG. **277**) to a deployed position proximal the stop projection **2318**.

After the length of conduit **2305** has been sealed and cut, the scrap retainer element **2320** may be displaced by the actuator **2322** from the distal position to the proximal position. This may press the scrap conduit span **2350** (see, e.g., FIG. **289**) against the stop projection **2318** and capture the scrap conduit span **2350** between the scrap retainer element **2320** and stop projection **2318**. With the scrap conduit span **2350** captured, the actuator **2304** for the first die block **2302**A may be powered to displace the first die block **2302**A to the open position.

As shown, the separating station **2020** may also include a scrap collection assembly **2326**. The scrap collection assembly **2326** may include a scrap collection actuator **2328** and a scrap container **2330**. After the first die block **2302**A is brought to the open position, the scrap collection actuator **2328** may displace the scrap container **2330** into the space between the two die blocks **2302**A. The scrap retention actuator **2322** may then be powered to retract the scrap retainer element **2320** away from the stop projection **2318**. This may free the scrap conduit span and allow the scrap conduit span to fall into the scrap container **2330**. The scrap collection actuator **2328** may then displace the scrap container **2330** out of the space between the die blocks **2302**A, B. In some examples, the scrap container **2330** may be displaced to a waste chute or the like and the scrap collection actuator **2330** may be powered to dump any scrap conduit spans in the scrap container **2330** into the waste chute.

Referring now to FIG. **278**, a front view of an example embodiment of the separating station **2020** shown in FIG. **277** is depicted. As shown, die blocks **2302**A, B are shown in an open state. The scrap retention element **2320** is depicted in a retracted state. Additionally, the scrap container **2330** is depicted in a withdrawn state and clear of the space between the die blocks **2302**A, B. A portion of the ventilation system **2010** is also depicted in FIG. **278**. The ventilation system **2010** may include two ports **2013** adjacent one of the dies **2306**. In the example embodiment, the ports **2013** are disposed adjacent the die **2306** included on die block **2302**B. The ports **2013** may be connected to a ventilation line **2011** which may be plumbed to an exhaust system **2008** of the system **10** and may help to remove any fumes generated during sealing and cutting of tubing.

Referring now to FIG. **279**, a perspective view of a portion of the dissociating assembly **2300** including the first die block **2302**A and scrap retainer assembly **2324** is depicted. The scrap retention element **2320** is shown in a deployed state proximal to the stop projection **2318**. In the example embodiment, the stop projection **2318** is included on the die **2306**. The scrap retention element **2320** may be displaced to the deployed state prior to the die blocks **2302**A, B being closed upon a length of conduit to be cut.

As shown, the scrap retention actuator **2322** may be a linear actuator (e.g. pneumatic, hydraulic, electromechanical) which may displace the scrap retention element **2320** along an axis. The displacement axis may be substantially perpendicular to a face of the stop projection **2318**. Referring now also to FIG. **280**, a perspective view of an example scrap retention element **2320**, the scrap retention element **2320** may include an elongate member **2336** which extends from a mounting segment **2338**. The mounting segment **2338** may be coupled to an output body **2340** of the actuator **2322**. The elongate member **2336** may include a terminal end opposite the mounting segment **2338** which may include a notch **2342**. The notch **2342** may encompass a portion of a scrap conduit span **2350** (see, e.g., FIG. **289**) held against the stop projection **2318** after cutting has completed. The elongate member **2336** may also include a chamfered face **2344**. The chamfered face **2344** may be the face of the elongate member **2336** most proximal the opposing die body **2302**B.

Still referring to FIG. **279**, the die blocks **2302**A, B may be mounted to the dissociating assembly **2300** via fasteners **2345**. Thin bridges **2347** of material may connect the portions of the die blocks **2302**A, B including the fasteners **2345** to portions of the die blocks **2302**A, B to which the dies **2306** are mounted. The thin bridges **2347** may help to inhibit flow of heat from the die blocks **2302**A, B to the components of the dissociating assembly **2300** to which the die blocks **2302**A, B are coupled via the fasteners **2345**.

Referring now to FIG. **281** and FIG. **282**, the die bodies **2302**A, B are shown in the closed position. The scrap retention element **2320** may be in the deployed state as the die bodies **2302**A, B are initially transitioned to the closed position as shown in FIG. **281**. The scrap retention actuator **2322** may subsequently be powered to retract the scrap retention element **2320** clear of the dies **2306** as shown in FIG. **282**. Though not shown in FIGS. **281-282** (see FIGS. **285**A-**287**B), a length of conduit would be secured between the dies **2306** as the die bodies **2302**A, B are driven to the closed position. While in the position shown in FIG. **282**, the heating elements **2308** (see, e.g., FIG. **277**) may be powered to heat the dies **2306**. As a result, the sealed regions may be established in the length of conduit in the and the dies **2306** may cut through the conduit in the sealed regions. The cut and seals may be generated without exposure of the interior of the conduit to the surrounding environment. Thus sterility of the interior of the conduit may be maintained where the interior of the conduit **2305** is provided in a sterile state.

Referring now to FIGS. **283-284** an exemplary die **2306** and a cross-section of two dies **2306** disposed adjacent and in opposition to one another are respectively depicted. The dies **2306** on each of the die blocks **2302**A, B may be essentially the same. In the example shown in FIG. **283**, the die **2306** includes a stop projection **2318** and scrap retention element guides **2346**. These may be omitted on the opposing one of the dies **2306**. As shown, each of the dies **2306** may include a substantially flat medial region **2360**. The medial region **2360** may be flanked on each side by a set of first raised sealing surfaces **2362**A, B. The set of first raised sealing surfaces **2362**A, B may also be substantially flat and may extend along a plane which is parallel to the medial region **2360**.

There may be a medial ramped region **2364** which spans between the medial region **2360** and each of the first raised sealing surfaces **2362**A, B. The transition between the

medial region **2360** and medial ramped regions **2364** may be rounded. Likewise, the transition between the medial ramped regions **2364** and the first raised sealing surfaces **2362**A, B may also be rounded. When the dies **2306** are brought together, the distance between the first raised sealing surfaces **2362**A, B of each die **2306** may be selected so as to be less than the thickness of the collapsed walls of a conduit intended to be sealed and cut by the dies **2306**. In some embodiments, the distance may be 65-85% (e.g. 75%) of the thickness of the conduit walls.

Each of the dies **2306** may include peak elements **2366** which may separate the first raised sealing surfaces **2362**A, B from a set of second raised sealing surfaces **2368**A, B. The peak elements **2366** may extend proud of the first and second raised sealing surfaces **2362**A, B, **2368**A, B. The transitions from the first and second raised sealing surfaces **2362**A, B, **2368**A, B to the peak elements **2366** may be rounded. When the dies **2306** are displaced against one another, the peak elements **2366** on each of the opposing dies **2306** may come into contact. The peak elements **2366** may include a rounded or pointed end in certain examples. In the embodiment shown, the end of the peak elements **2366** are depicted as a flat plateau.

The second raised sealing surfaces **2368**A, B may be substantially flat and may extend substantially parallel to the medial regions **2360** of the dies **2306**. When the dies **2306** are brought together, the distance between the second raised sealing surfaces **2368**A, B of each die **2306** may be selected so as to be less than the thickness of the collapsed walls of a conduit intended to be sealed and cut by the dies **2306**. In some embodiments, the distance may be 50-90% (e.g. 75%) of the thickness of the conduit walls. The second raised sealing surfaces **2368** A, B may be coplanar with the first raised sealing surfaces **2362**A, B in certain embodiments.

A lateral ramped region **2372** may extend from each of the second raised sealing surfaces **2368**A, B of each die **2306** to a set of lateral retention surfaces **2374**. The lateral retention surfaces **2374** may be substantially flat and may be parallel to the medial region **2360**. The transitions to the lateral ramped regions **2372** from the second raised sealing surfaces **2368**A, B and lateral retention surfaces **2374** may be rounded. When the dies **2306** are displaced against one another the distance between opposing lateral retention surfaces **2374** may be less than the outer diameter of a conduit intended to be sealed and cut by the dies **2306**. This may ensure that as the dies **2306** are closed against the conduit, some pressure may be exerted against the conduit to aid in holding the conduit in place within the dies **2306**. Preferably, the distance between the opposing lateral retention surfaces **2374** may be such that the lumen within the conduit **2305** is not collapsed. Thus, the distance between the opposing lateral retention surfaces **2374** may be greater than the thickness of the conduit walls.

Each of the lateral retention surfaces **2374** may include a depression **2376** which may extend to a side **2378** of the die **2306**. The depth of the depression **2376** may be greatest at the side **2378** of the die **2306** and may decrease in depth in continuous fashion as distance from the side **2378** of the die **2306** increases. Additionally, the depth of the depression **2376** may increase as distance from the midplane of the die **2306** decreases. When the dies **2306** are displaced against one another the distance between opposing surfaces of the depressions **2376** at the sides **2378** of the dies **2306** may be no greater than equal to the outer diameter of a conduit intended to be sealed and cut by the dies **2306**. In certain examples the distance between opposing surfaces of the depressions **2376** at the sides **2378** of the dies **2306** may be 90-100% of the outer diameter of the conduit **2305**. This may help to locate and hold the conduit **2305** in place within the dies **2306**. Additionally, preventing substantial compression of the conduit **2305** in these areas may help to ensure that the peripheral edges of the dies **2306** do not cut into the conduit **2305** as the dies **2306** are heated.

The sets of second raised sealing surfaces **2368**A, B, lateral ramped regions **2372**, lateral retention surfaces **2374**, and depressions **2376** on each side of the dies **2306** may collectively form conduit shaping regions **2380**. As best shown in FIG. **283**, the dies **2306** may include sets of walls **2370** which may flank each of the conduit shaping regions **2380**. The walls **2370** may extend proud of the second raised sealing surfaces **2368**A, B. When the dies **2306** are displaced against one another the walls **2370** of the opposing dies **2306** may contact and sit against one another. The walls **2370** may act as polymer flow barriers which obstruct molten polymer from flowing outside of the conduit shaping regions **2380** of each die **2306**.

The progression of FIG. **285**A through FIG. **287**B depict an illustrative length of conduit **2305** being sealed and cut by dies **2306** of an example dissociation assembly **2300**. In the progression of FIG. **285**A through FIG. **287**B the conduit **2305** is shown as a piece of fill conduit **2018** and a port **1654** of a bag **26** which have been coupled to one another at a joint **2206**. The conduit **2305** is liquid filled as represented by the stippling within the lumen **2210** of the conduit **2305**. Though a fill conduit **2018** and port **1654** are shown for sake of example, any type of conduit may be sealed and cut. Though the example embodiment is described in the context of liquid filled conduits, the disclosure is not limited to sealing and cutting of liquid filled conduits. Gas filled conduits may also be sealed and cut in the manner described in relation to the progression of FIG. **285**A through FIG. **287**B.

Referring specifically to FIGS. **285**A-B, a set of cross-sectional views are shown. FIG. **285**A depicts a cross-sectional view through the midplane of the example dies **2306**. FIG. **285**B is a cross section taken along the plane of the top surface of the walls **2370** of one of the dies **2306**. As shown, the conduit **2305** may be positioned on the die **2306** of the second die body **2302**B. The conduit **2305** may for example be displaced to the die **2306** via a bag carriage **2000** (see, e.g., FIG. **252**) and dispenser carriage **2242** (see, e.g., FIG. **262**) of the system **10**. The scrap retainer element **2320** may be actuated to the deployed state.

Referring now to FIGS. **286**A-B another set of cross-sectional views are shown. FIG. **286**A depicts a cross-sectional view through the midplane of the example dies **2306**. FIG. **286**B is a cross section taken along the plane of the top surface of the walls **2370** of one of the dies **2306**. The die actuator **2304** (see, e.g., FIG. **278**) may be powered to transition the die bodies **2302**A, B to the closed position. As the die bodies **2302**A, B are brought together, a bottom face of the scrap retention element **2320** may contact the region of the conduit **2305** including the joint **2206**. Further displacement of the die body **2302**A may press the scrap retention element **2320** into the region including the joint **2206** to at least partially collapse the conduit **2305** in this region. This may drive fluid in the conduit **2305** out of the region of the conduit **2305** including the joint **2206**. The contours of the chamfered face **2344** of the scrap retention element **2320** may aid in directing fluid away from the joint **2206** region.

When the closed position is reached (shown in FIG. **286**A-B), the conduit **2305** may be flattened and compressed between the first and second raised sealing surfaces **2362**A, B, **2368**A, B. The peak elements **2366** may press into, but

not cut the conduit **2305**. This may firmly occlude the conduit **2305** at these locations. Thus, the span of the conduit **2305** including the joint **2206** may be isolated from the remainder of the conduit **2305** allowing the scrap retainer element **2320** to be retracted. A constant pressure may be applied on the conduit **2305** by the dies **2306** when the dies **2306** are in the closed position.

Referring now to FIGS. **287**A-B another set of cross-sectional views are shown. FIG. **287**A depicts a cross-sectional view through the midplane of the example dies **2306**. FIG. **287**B is a cross section taken along the plane of the top surface of the walls **2370** of one of the dies **2306**. As mentioned above, the control system **15** may command the heating elements **2308** associated with each die **2306** to heat to a heating temperature set point once the scrap retainer element **2320** has been withdrawn. The chamfered face **2344** may aid in withdrawal of the scrap retention element **2320** as the chamfers may be cut at an angle. Thus the chamfers may form ramps which may facilitate removal of the scrap retention element.

As the dies **2306** are heated, conduit **2305** may become sufficiently molten that the walls of the conduit **2305** may seal together in the regions compressed between the first and second raised sealing surfaces **2362**A, B, **2368**A, B. The constant pressure exerted by the dies **2306** on the conduit **2305** may cause the peak elements **2366** to press through the conduit **2305** dissociating the portions of the conduit **2305** on each side of the dies **2306**. In the example embodiment, the port **1654** may be separated from the fill conduit **2018**. A scrap conduit span **2350** between the peak elements **2366** may also be generated. As the regions of the conduit **2305** cut by the peak elements **2366** may be firmly occluded and sealed, the interior lumen **2210** of the conduit **2305** may not be exposed to the surrounding environment as the conduit **2305** is cut. As a result, any controlled environment (e.g. sterile environment) within the lumen **2210** may be preserved.

When heated, the conduit **2305** material may flow and spread along at least the first and second raised sealing surfaces **2362**A, B, **2368**A, B due to the compression. The walls **2370** flanking the second raised sealing surfaces **2368**A, B may constrain the flow of this material such that the spreading is limited. As a result, the cut ends of the fill conduit **2018** and port **1654** may reliably be shaped to a substantially controlled form which may provide a robust seal. Additionally, where the interior volume of the conduit **2305** is filled with liquid, the liquid may help to resist the flow of conduit **2305** material into the lumen **2210**. Thus, the liquid within the conduit **2305** may be leveraged to help constrain flow of molten conduit **2305** material as well. As mentioned above, once sealing and cutting has concluded, the cooling assemblies **2312** (see, e.g., FIG. **277**) may be powered to decrease the temperature of the conduit **2305** and dies **2306** to a cooling temperature set point at which the port **1654** and fill conduit **2018** may be removed.

After cutting is completed and referring now to FIGS. **288-289**, the scrap retention actuator **2322** may be powered to deploy the scrap retention element **2320**. The scrap conduit span **2350** may be displaced against the stop projection **2318** of one of the dies **2306** by the scrap retention element **2320**. The scrap retention element **2320** may be deployed until a certain predefined pressure is exerted against the scrap conduit span **2350** to prevent bursting of the scrap conduit span **2350**. The notch **2342** of the scrap retention element **2320** may also surround and cradle a portion of the scrap conduit span **2350**. Thus, with the scrap retention element **2320** deployed, the scrap conduit span **2350** may be held and retained in place on the die **2306**. The die actuator **2304** may be powered to transition the die bodies **2302**A, B to the open position.

Referring now to FIGS. **290-292**, the scrap collection actuator **2328** may then be powered to displace the scrap collection container **2330** into the space between the die bodies **2302**A, B. As shown, the scrap collection actuator **2328** is a rotary actuator (e.g., pneumatic, hydraulic, electromechanical). The scrap collection container **2330** may be attached to an output of the scrap collection actuator **2328** by an arm **2352**. Once the scrap collection container **2330** is in position under the scrap retention element **2320**, the scrap retention element **2320** may be retracted by the scrap retention actuator **2322**. The scrap conduit span **2350** may fall from the die **2306** and into the scrap collection container **2330**. The scrap collection actuator **2328** may then be powered to swing the scrap collection container **2330** to a withdrawn position. In the event that the scrap conduit span **2350** sticks to the scrap retention element, the scrap retention element guides **2346** may block movement of the scrap conduit span **2350** as the scrap retention element **2320** is retracted. Thus, the scrap retention element guides may dislodge a stuck scrap conduit span **2350** from the scrap retention element **2320**.

Various alternatives and modifications can be devised by those skilled in the art without departing from the disclosure. Accordingly, the present disclosure is intended to embrace all such alternatives, modifications and variances. Additionally, while several embodiments of the present disclosure have been shown in the drawings and/or discussed herein, it is not intended that the disclosure be limited thereto, as it is intended that the disclosure be as broad in scope as the art will allow and that the specification be read likewise. Therefore, the above description should not be construed as limiting, but merely as exemplifications of particular embodiments. And, those skilled in the art will envision other modifications within the scope and spirit of the claims appended hereto. Other elements, steps, methods and techniques that are insubstantially different from those described above and/or in the appended claims are also intended to be within the scope of the disclosure.

The embodiments shown in drawings are presented only to demonstrate certain examples of the disclosure. And, the drawings described are only illustrative and are non-limiting. In the drawings, for illustrative purposes, the size of some of the elements may be exaggerated and not drawn to a particular scale. Additionally, elements shown within the drawings that have the same numbers may be identical elements or may be similar elements, depending on the context.

Where the term "comprising" is used in the present description and claims, it does not exclude other elements or steps. Where an indefinite or definite article is used when referring to a singular noun, e.g. "a" "an" or "the", this includes a plural of that noun unless something otherwise is specifically stated. Hence, the term "comprising" should not be interpreted as being restricted to the items listed thereafter; it does not exclude other elements or steps, and so the scope of the expression "a device comprising items A and B" should not be limited to devices consisting only of components A and B.

Furthermore, the terms "first", "second", "third" and the like, whether used in the description or in the claims, are provided for distinguishing between similar elements and not necessarily for describing a sequential or chronological order. It is to be understood that the terms so used are interchangeable under appropriate circumstances (unless

clearly disclosed otherwise) and that the embodiments of the disclosure described herein are capable of operation in other sequences and/or arrangements than are described or illustrated herein.

What is claimed is:

1. A fluid production system for producing a fluid having at least one desired characteristic comprising: a mixing circuit having a first portion, second portion, and third portion, each of the first and second portion being in communication via respective valves with the third portion, the mixing circuit having a first and second receptacle, each including a piercing member and each being connected to one another via a flow channel; and a cartridge having an inlet port and an outlet port each sealed by a cover, the inlet and outlet port configured to displace respectively within the first receptacle and second receptacle from a first position within the respective first and second receptacles to a second position within the respective first and second receptacles, the piercing members in fluid communication via the flow channel in the first position, the piercing members isolated from the flow channel, and each cover punctured by a respective piercing member of the piercing members when the inlet and outlet port are in the second position.

2. The system of claim **1**, wherein the mixing circuit includes respective conductivity sensors for the first portion, second portion, and third portion, the conductivity sensors positioned to sense conductivity of fluid passing through the first portion, second portion, and third portion.

3. The system of claim **2**, wherein the system further comprises a controller configured to govern operation of the valves based on data from at least one of the conductivity sensors.

4. The system of claim **1**, wherein the cartridge has an interior volume filled at least partially with a solid constituent, the first piercing member includes a flow lumen in fluid communication with a diluent supply flow path from the first portion of the mixing circuit, and the second piercing member includes a flow lumen in fluid communication with an inlet to the second portion.

5. The system of claim **1**, wherein the system further comprises a carriage configured to couple to the cartridge, a cartridge detection sensor, a cartridge position sensor, and an actuator configured to drive the carriage through a displacement range, where the inlet and outlet ports transition from the first position to the second position when the cartridge is coupled to the carriage.

6. A liquid concentrate generation system comprising: a manifold having a first receptacle including a first piercing member, a second receptacle including a second piercing member, and a flow channel connecting the first receptacle and second receptacle; and a cartridge having an inlet port and an outlet port sealed by a respective first and second cover, the inlet and outlet port are respectively displaceable within the first receptacle and second receptacles from an unspiked position within the respective first and second receptacles to a spiked position within the respective first and second receptacles, the first and second piercing members being in communication with the flow channel and spaced apart respectively from the first and second cover in the unspiked position, the first and second piercing members isolated from the flow channel and respectively puncturing the first and second cover in the spiked position.

7. The system of claim **6**, wherein the cartridge has an interior volume filled at least partially with a solid constituent.

8. The system of claim **6**, wherein the first piercing member includes a flow lumen in fluid communication with a fluid supply flow path of the manifold.

9. The system of claim **6**, wherein the second piercing member includes a flow lumen in fluid communication with a liquid concentrate flow path of the manifold.

10. The system of claim **6**, wherein the inlet port and outlet port each include a wide region associated with a first gasket and a narrow region associated with a second gasket.

11. The system of claim **10**, wherein in the unspiked position, the first gaskets of the inlet port and outlet port respectively form a seal against the wall of the first receptacle and second receptacle and the second gaskets of the inlet port and outlet port are out of contact with the wall of the first receptacle and second receptacle respectively.

12. The system of claim **10**, wherein in the spiked position, the first and second gasket of the inlet port form a seal against the wall of the first receptacle and the first and second gasket of the outlet port form a seal against the wall of the second receptacle.

13. The system of claim **6**, wherein the first piercing member is disposed more proximal a narrow region of the first receptacle than a wide region of the first receptacle and the second piercing member is disposed more proximal a narrow region of the second receptacle than a wide region of the second receptacle.

14. The system of claim **6**, wherein in the spiked position the first piercing member is in fluid communication with the second piercing member via a flow path from the inlet port, through an interior volume of the cartridge, and to the outlet port.

15. The system of claim **6**, wherein the system further comprises an actuator and a carriage, the cartridge configured to couple to the carriage.

16. The system of claim **15**, wherein the system further comprises a cartridge detection sensor and a cartridge position sensor.

17. A fluid flow coupling arrangement comprising:

a manifold having a set of receptacles each including a wide region, a narrow region, and a piercing member with a flow lumen, there being a disinfection flow path extending into fluid communication with each receptacle; and

a consumable having a set of ports, each having a port cover and a plurality of sealing members, the consumable displaceable with respect to the manifold from a partially installed position to a spiked position, the ports being disposed at least partially within and sealing a respective receptacle of the set of receptacles in both the partially installed position and spiked position, the piercing members being in communication with the disinfection flow path and spaced apart from the covers in the partially installed position, the piercing members isolated from the disinfection flow path and puncturing the covers in the spiked position.

18. The fluid flow coupling arrangement of claim **17**, wherein the ports each include a first region with a first sealing member of the plurality of sealing members and a second region with a second sealing member of the plurality of sealing members.

19. The fluid flow coupling arrangement of claim **18**, wherein in the partially installed position, each first sealing member forms a seal against a sidewall of the respective receptacle and each second sealing member is out of contact with the sidewall of the respective receptacles.

20. The fluid flow coupling arrangement of claim **18**, wherein in the spiked position, the first and second sealing members each form a seal against a sidewall of the respective receptacles.

21. The fluid flow coupling arrangement of claim **17**, wherein the piercing members extend from a surface of each receptacle opposite an open end of each receptacle.

22. The fluid flow coupling arrangement of claim **17**, wherein each of the narrow region of each receptacle is proximate the piercing member of the respective receptacle and the wide region of each receptacle is disposed proximate an open end of the respective receptacle.

23. The fluid flow coupling arrangement of claim **17**, wherein the system further comprises a carriage, an actuator, a consumable detection sensor, and a carriage position sensor, the consumable being configured to couple to the carriage.

24. The fluid flow coupling arrangement of claim **17**, wherein the ports each include a wide region associated with a first sealing member of the plurality of sealing members and a narrow region associated with a second sealing member of the plurality of sealing members.

25. The fluid flow coupling arrangement of claim **24**, wherein in the partially installed position, the first sealing members form a seal against a wide region of the respective receptacles and the second sealing members are out of contact with the respective receptacles, the seal formed by the first sealing members being more distal the piercing member of the respective receptacle than an opening to the disinfection flow path from the respective receptacle.

* * * * *