April, 2026

A report on Packaging Fundamentals of Design and Testing

Submitted By: Anjali Thakran

Project 01: Thermal Simulation of a Flip-Chip BGA Package Using ANSYS Icepak

Objective: To study the temperature distribution in a flip-chip BGA package using ANSYS Icepak.

Software Used: ANSYS Electronics Desktop – Icepak. Icepak is used for electronics thermal management and predicts temperature and heat transfer in packages and assemblies.

Procedure:

- Opened ANSYS Electronics Desktop.
- Set up the flip-chip BGA package model.
- Defined material properties and thermal source.
- Generated the mesh.
- Ran the thermal simulation.
- Viewed the temperature contour result.

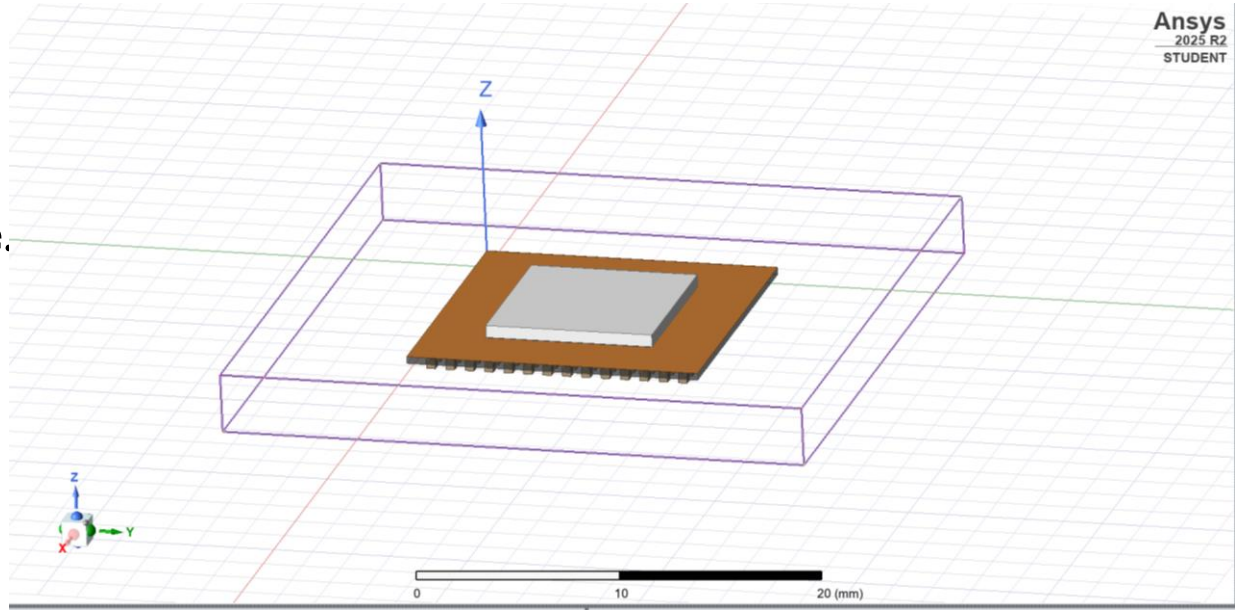

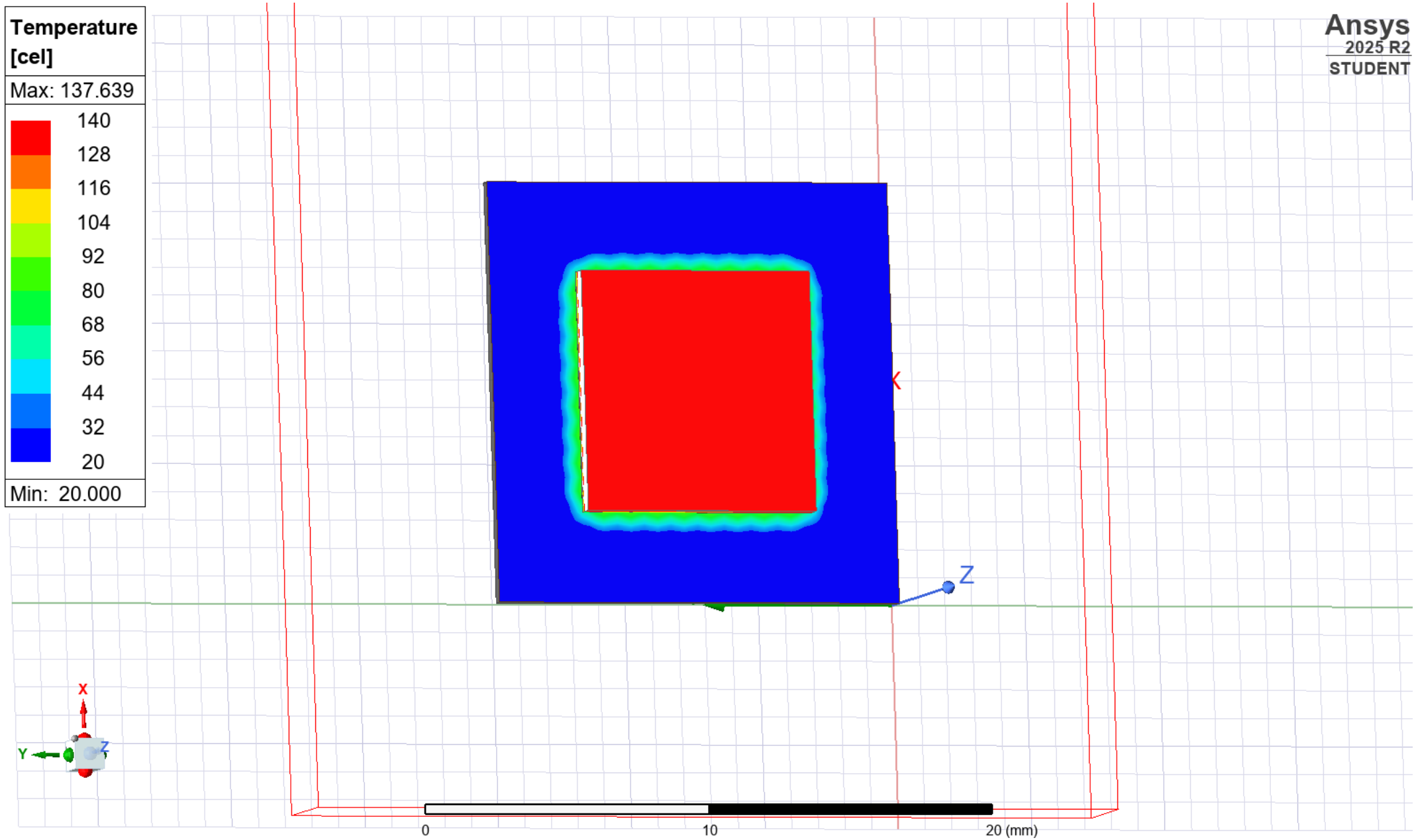
Temperature
[cel]
Max: 137.639
140
128
116
104
92
80
68
56
44
32
20
Min: 20.000
Ansys
2025 R2
STUDENT
X
Z
Y
0
10
20 (mm)

Summary of Project 01:

Results:

- The temperature contour shows that the highest temperature occurs at the central chip region. From the result: Maximum temperature = 137.639 °C , Minimum temperature = 20.000 °C . The red region represents the hottest zone, while the blue region represents the coolest area. The temperature decreases outward from the chip, showing heat spreading through the package.
- The result indicates that the chip is the main heat source in the package. Because heat is concentrated near the die, a hotspot forms in the center.
- The surrounding package remains cooler, which shows that heat is conducted away from the source. This type of result is useful for improving package thermal design.

Project 02: PCB Simulation using ANSYS Electronics Desktop

Objective: To study the temperature distribution across an electronic board using **ANSYS Icepak**.

Procedure: The Graphics Card example was opened in ANSYS Electronics Desktop. A steady-state thermal simulation was run in Icepak. After the solver completed successfully, a temperature field plot was generated on the PCB and heat sink surfaces.

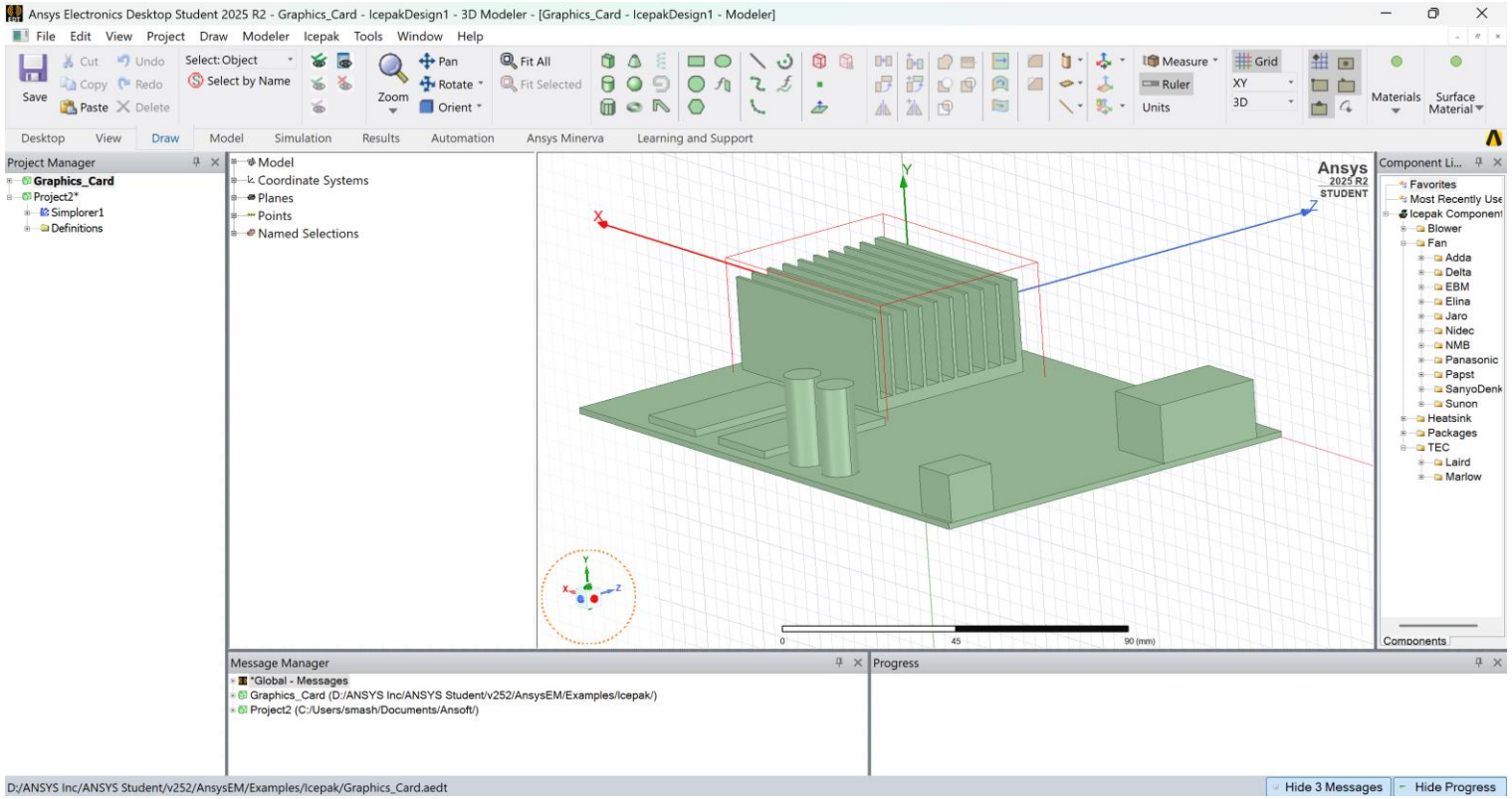

Simulation completed successfully and residual plot obtained..

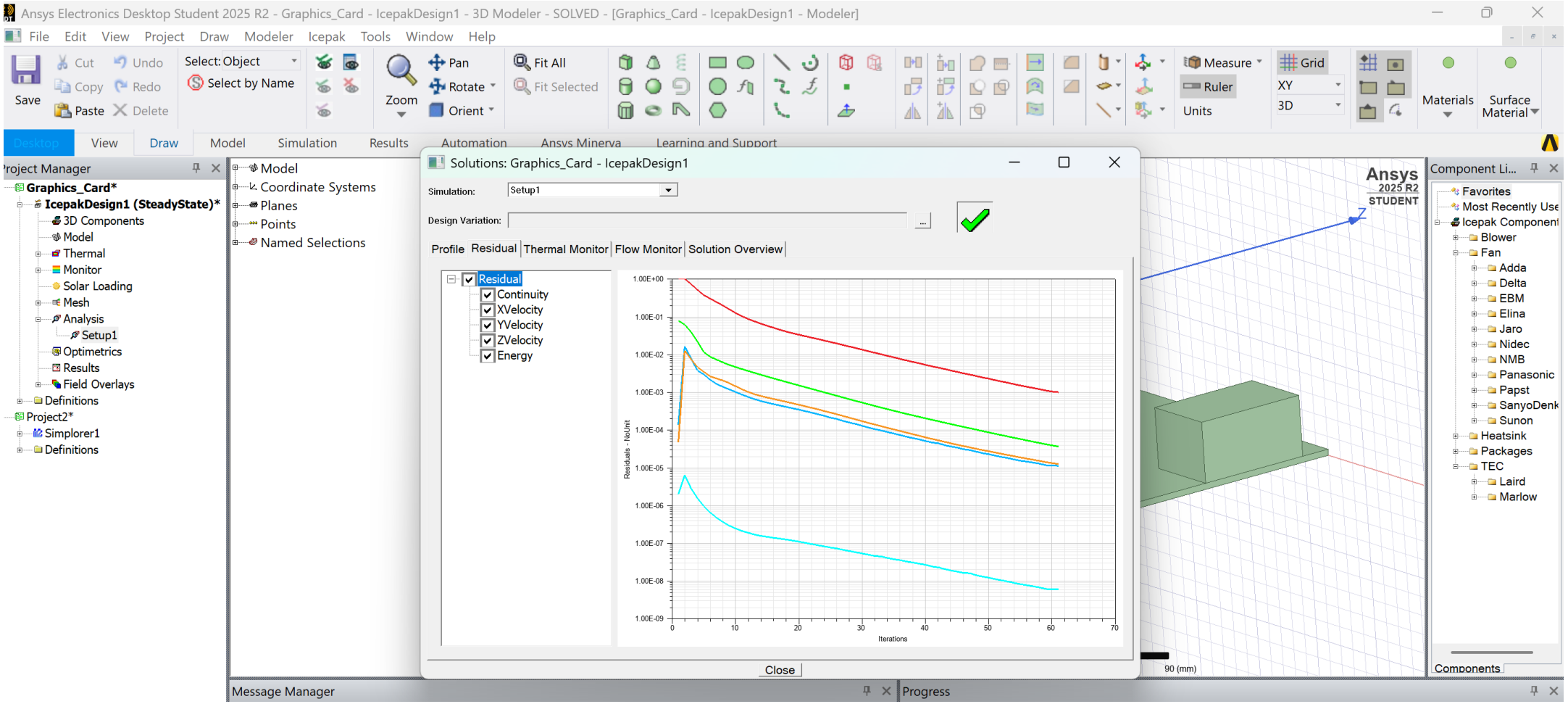

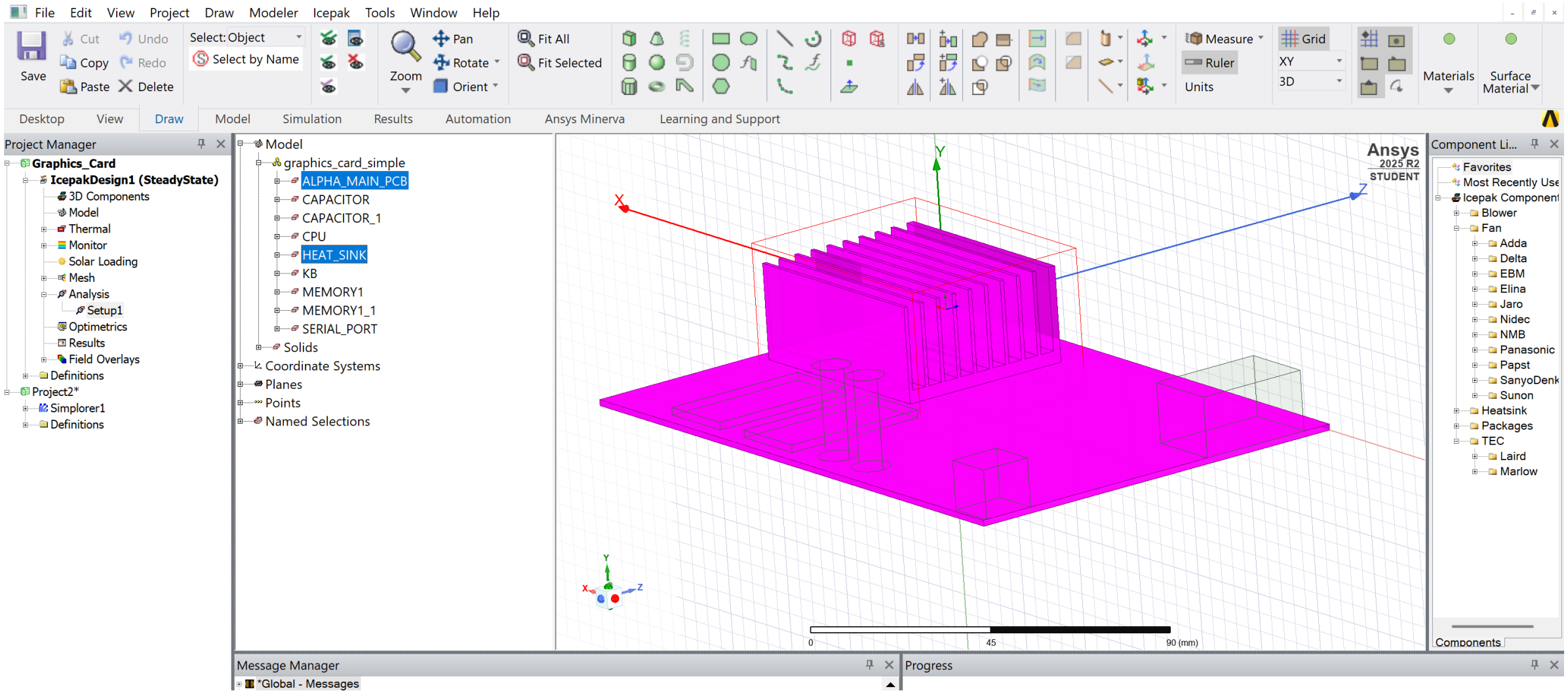
File Edit View Project Draw Modeler Icepak Tools Window Help
Save
Cut
Copy
Paste
Undo
Redo
Delete
Select: Object
Select by Name
Zoom
Pan
Rotate
Orient
Fit All
Fit Selected
Measure
Ruler
Units
Grid
XY
3D
Materials
Surface Material
Desktop
View
Draw
Model
Simulation
Results
Automation
Ansys Minerva
Learning and Support
Project Manager
Graphics_Card
IcepakDesign1 (SteadyState)
3D Components
Model
Thermal
Monitor
Solar Loading
Mesh
Analysis
Setup1
Optimetrics
Results
Field Overlays
Definitions
Project2*
Simplorer1
Definitions
Model
graphics_card_simple
ALPHA_MAIN_PCB
CAPACITOR
CAPACITOR_1
CPU
HEAT_SINK
KB
MEMORY1
MEMORY1_1
SERIAL_PORT
Solids
Coordinate Systems
Planes
Points
Named Selections
Ansys
2025 R2
STUDENT
0
45
90 (mm)
Component Li...
Favorites
Most Recently Use
Icepak Component
Blower
Fan
Adda
Delta
EBM
Elina
Jaro
Nidec
NMB
Panasonic
Papst
SanyoDenk
Sunon
Heatsink
Packages
TEC
Laird
Marlow
Components
Message Manager
*Global - Messages
Progress

Temperature distribution across the PCB and heat sink..

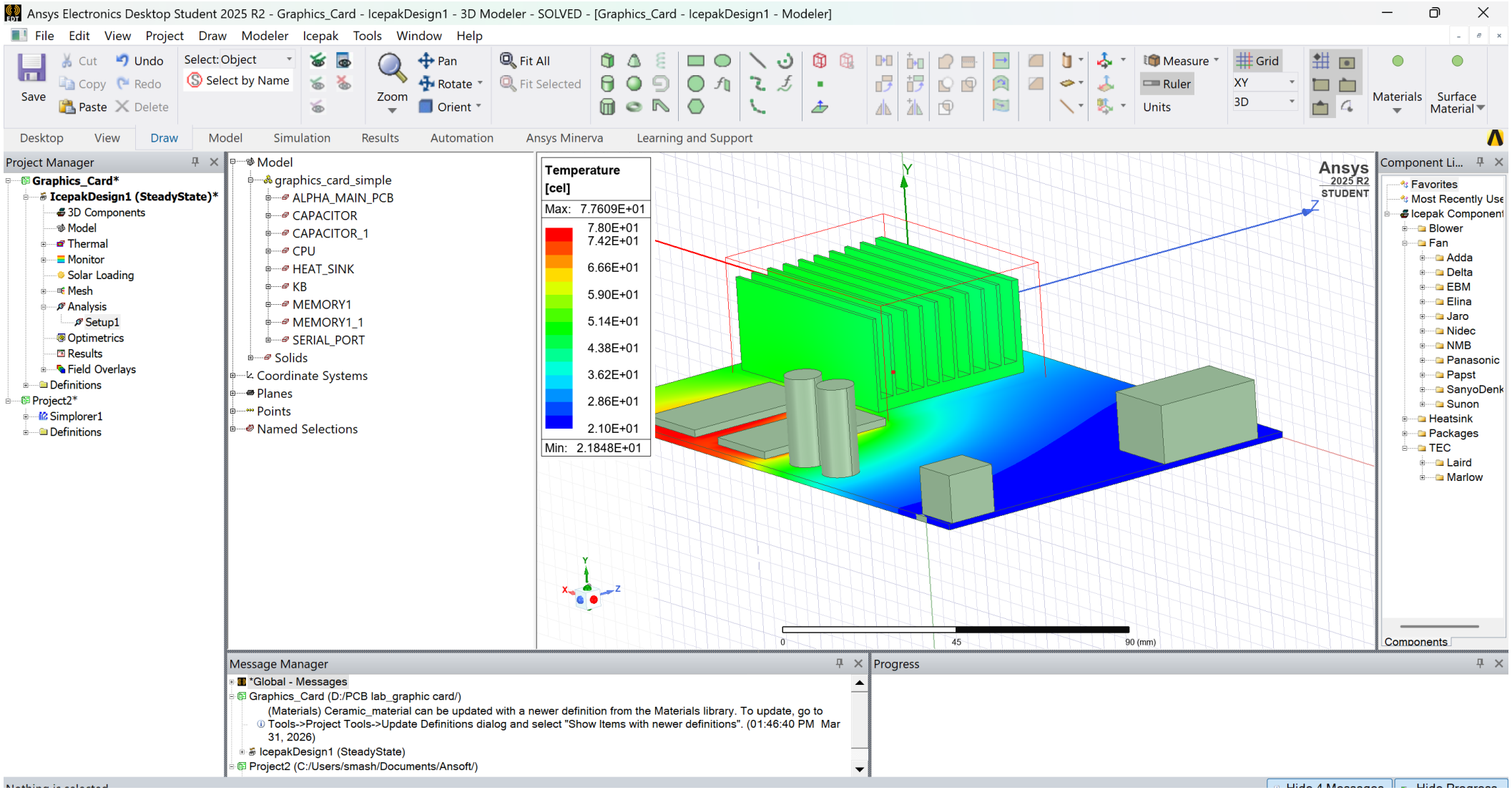

Summary of Project 02:

Observation: The PCB shows a non-uniform temperature distribution. The highest temperature is around **77.6 °C**, while the minimum temperature is around **21.8 °C**. The hotter region is located near the main heat-generating section, and the temperature decreases away from that area across the board.

Conclusion: In this model, power is applied through heat-generating electronic components, and the resulting thermal simulation shows how that power causes temperature rise and heat spreading across the PCB. Finally, the simulation successfully demonstrates heat spreading across a PCB. The results show that the regions near the active heat source experience higher temperatures, while the rest of the board remains cooler. This confirms how power dissipation in electronic components leads to temperature variation across the PCB.

Project 03: : Signal Integrity Design

Objective: To study the electrical coupling between nearby PCB traces using ANSYS Q3D Extractor and understand how trace layout affects signal integrity.

Need: Signal integrity is related to how cleanly an electrical signal travels through a PCB trace without unwanted coupling, noise, or distortion. In this lab, a simple two-trace PCB model was created in Q3D Extractor using a substrate, a ground plane, and two parallel signal traces.

Procedure: The geometry was created in Q3D Extractor and excitations were assigned to the two signal traces. After solving the model, the CG matrix was viewed to study the parasitic coupling between the traces.

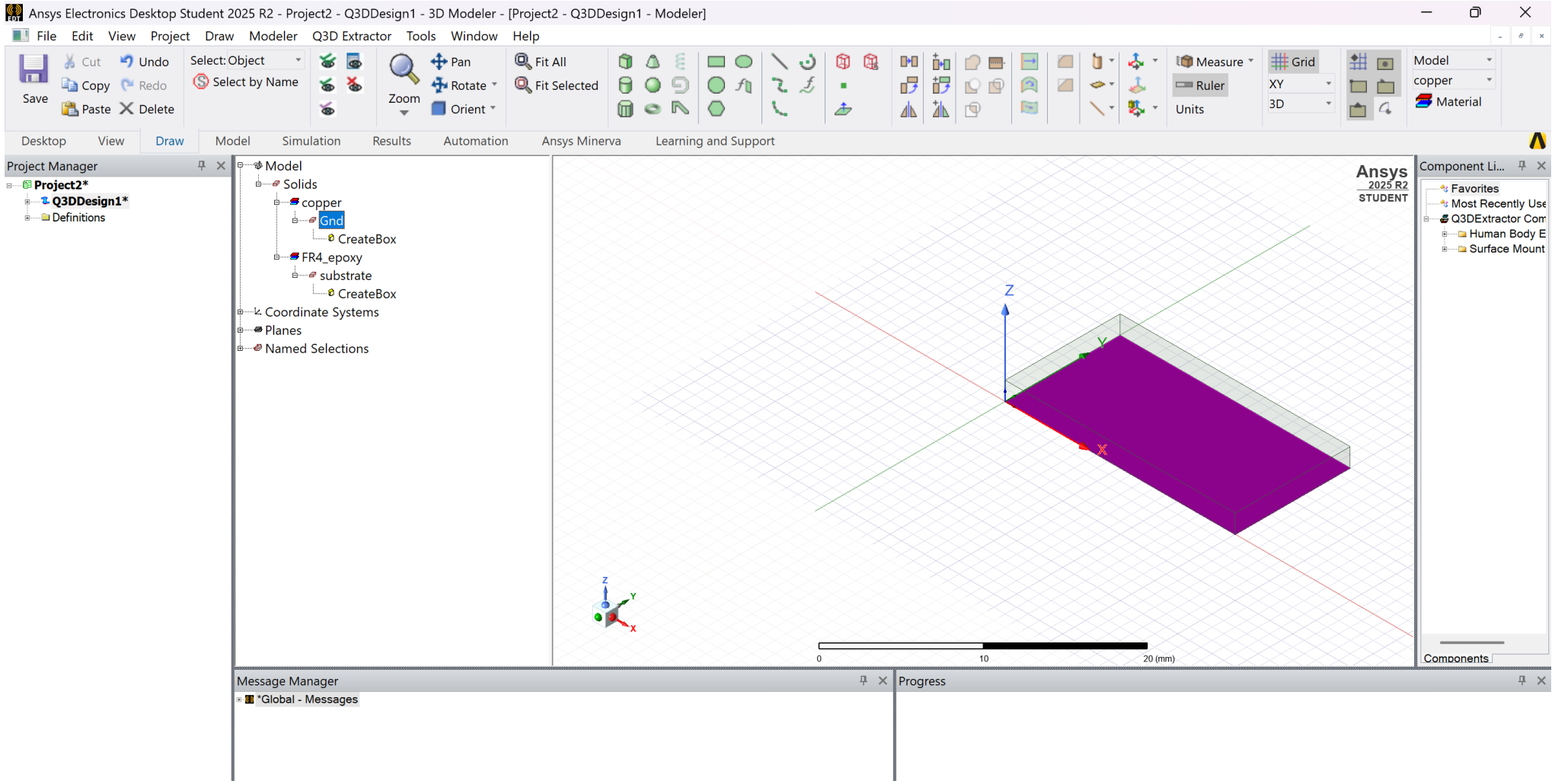

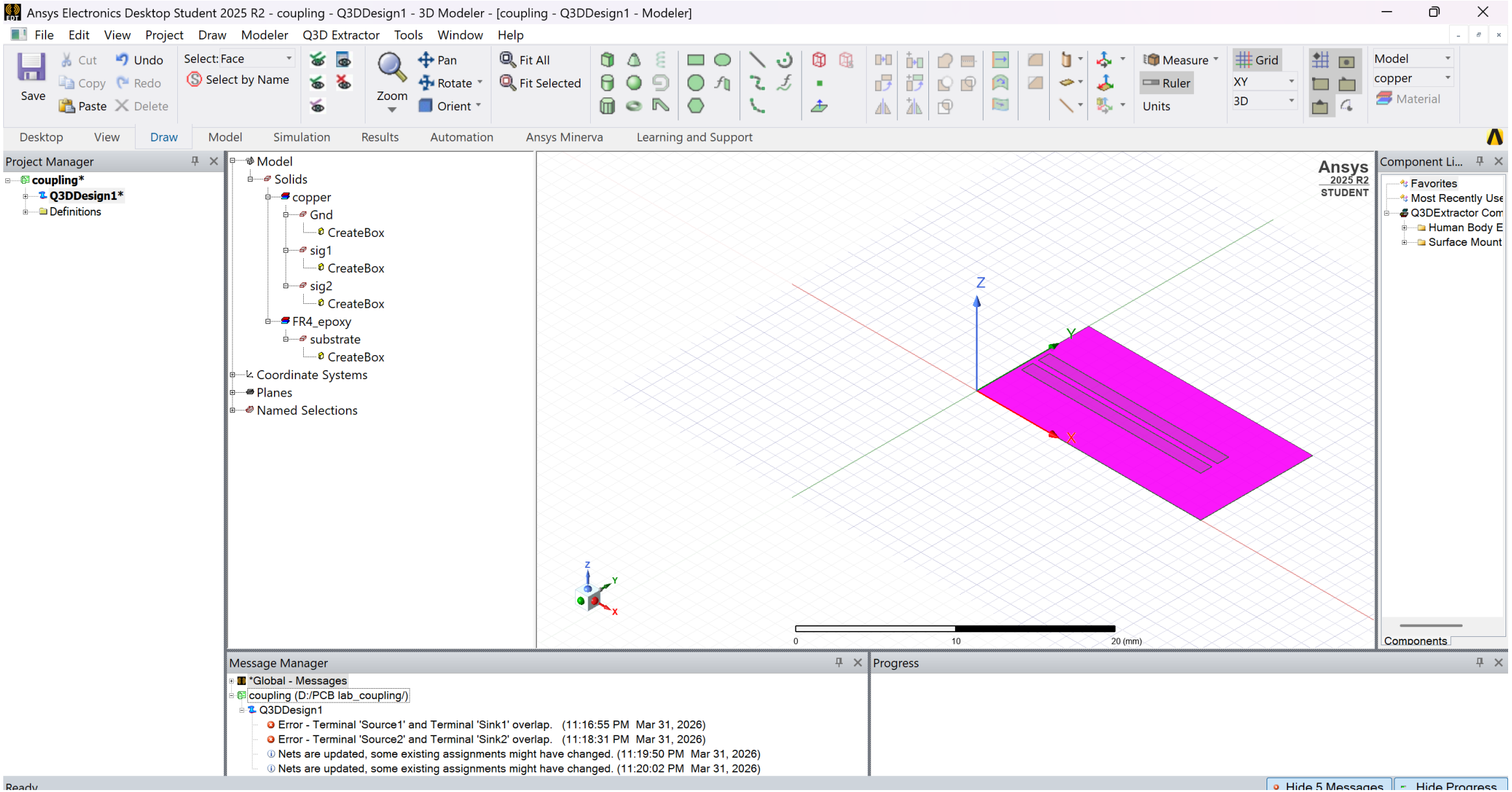
Ansys Electronics Desktop Student 2025 R2 - coupling - Q3DDesign1 - 3D Modeler - [coupling - Q3DDesign1 - Modeler]
File Edit View Project Draw Modeler Q3D Extractor Tools Window Help
Save
Cut
Copy
Paste
Undo
Redo
Delete
Select: Face
Select by Name
Zoom
Pan
Rotate
Orient
Fit All
Fit Selected
Measure
Ruler
Units
Grid
XY
3D
Model
copper
Material
Desktop View Draw Model Simulation Results Automation Ansys Minerva Learning and Support
Project Manager
coupling*
Q3DDesign1*
Definitions
Model
Solids
copper
Gnd
CreateBox
sig1
CreateBox
sig2
CreateBox
FR4_epoxy
substrate
CreateBox
Coordinate Systems
Planes
Named Selections
Ansys
2025 R2
STUDENT
Z
Y
X
0
10
20 (mm)
Component Li...
Favorites
Most Recently Use
Q3DExtractor Com
Human Body E
Surface Mount
Components
Message Manager
*Global - Messages
coupling (D:/PCB lab_coupling/)
Q3DDesign1
Error - Terminal 'Source1' and Terminal 'Sink1' overlap. (11:16:55 PM Mar 31, 2026)
Error - Terminal 'Source2' and Terminal 'Sink2' overlap. (11:18:31 PM Mar 31, 2026)
Nets are updated, some existing assignments might have changed. (11:19:50 PM Mar 31, 2026)
Nets are updated, some existing assignments might have changed. (11:20:02 PM Mar 31, 2026)
Progress
Ready
Hide 5 Messages
Hide Progress

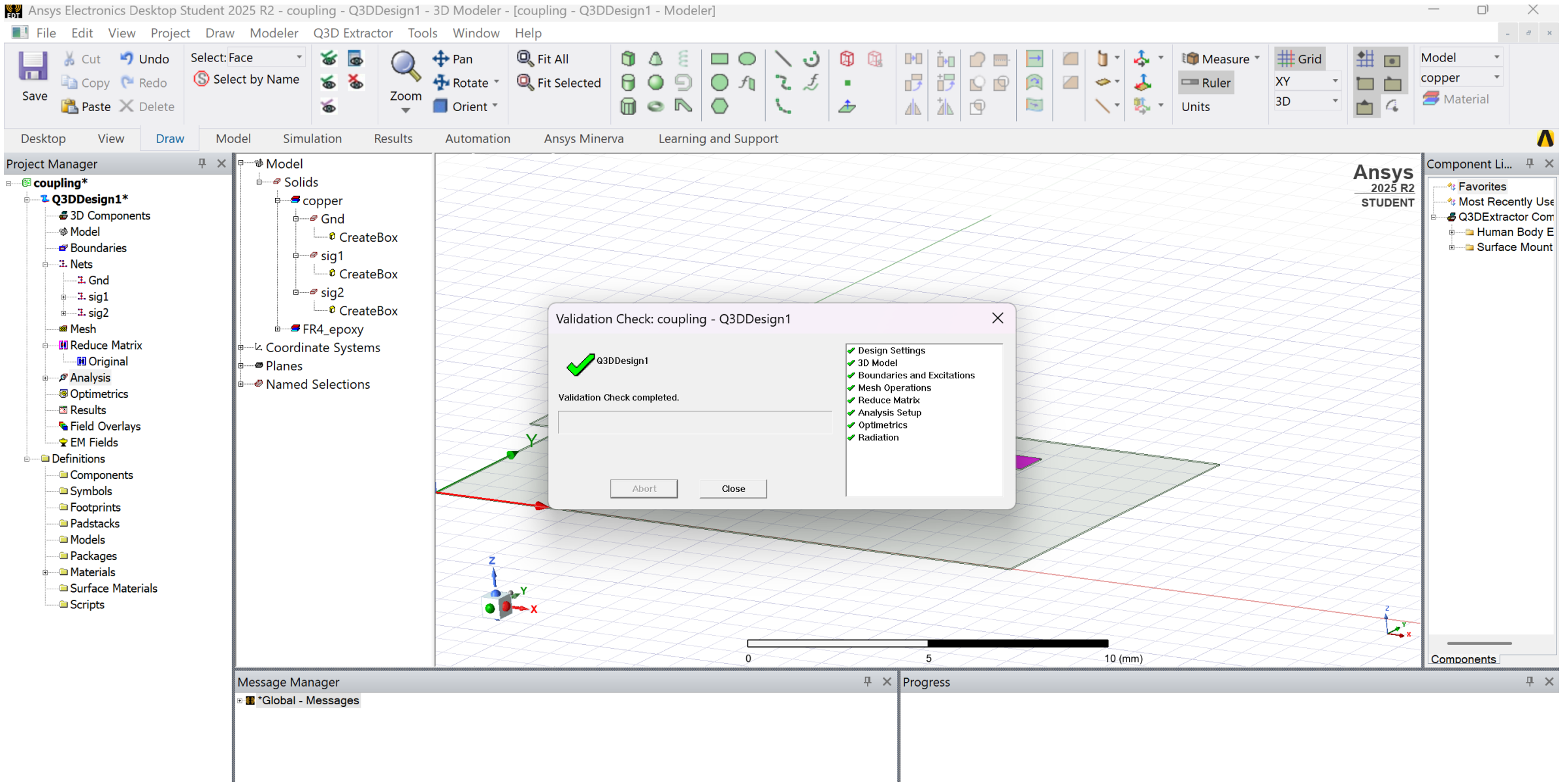
Ansys Electronics Desktop Student 2025 R2 - coupling - Q3DDesign1 - 3D Modeler - [coupling - Q3DDesign1 - Modeler]
File Edit View Project Draw Modeler Q3D Extractor Tools Window Help
Save
Cut
Copy
Paste
Undo
Redo
Delete
Select: Face
Select by Name
Zoom
Pan
Rotate
Orient
Fit All
Fit Selected
Measure
Ruler
Units
Grid
XY
3D
Model
copper
Material
Desktop View Draw Model Simulation Results Automation Ansys Minerva Learning and Support
Project Manager
coupling*
Q3DDesign1*
3D Components
Model
Boundaries
Nets
Gnd
sig1
sig2
Mesh
Reduce Matrix
Original
Analysis
Optimetrics
Results
Field Overlays
EM Fields
Definitions
Components
Symbols
Footprints
Padstacks
Models
Packages
Materials
Surface Materials
Scripts
Model
Solids
copper
Gnd
CreateBox
sig1
CreateBox
sig2
CreateBox
FR4_epoxy
Coordinate Systems
Planes
Named Selections
Validation Check: coupling - Q3DDesign1
Q3DDesign1
Validation Check completed.
Abort
Close
Design Settings
3D Model
Boundaries and Excitations
Mesh Operations
Reduce Matrix
Analysis Setup
Optimetrics
Radiation
Ansys
2025 R2
STUDENT
0
5
10 (mm)
Component Li...
Favorites
Most Recently Use
Q3DExtractor Com
Human Body E
Surface Mount
Components
Message Manager
*Global - Messages
Progress

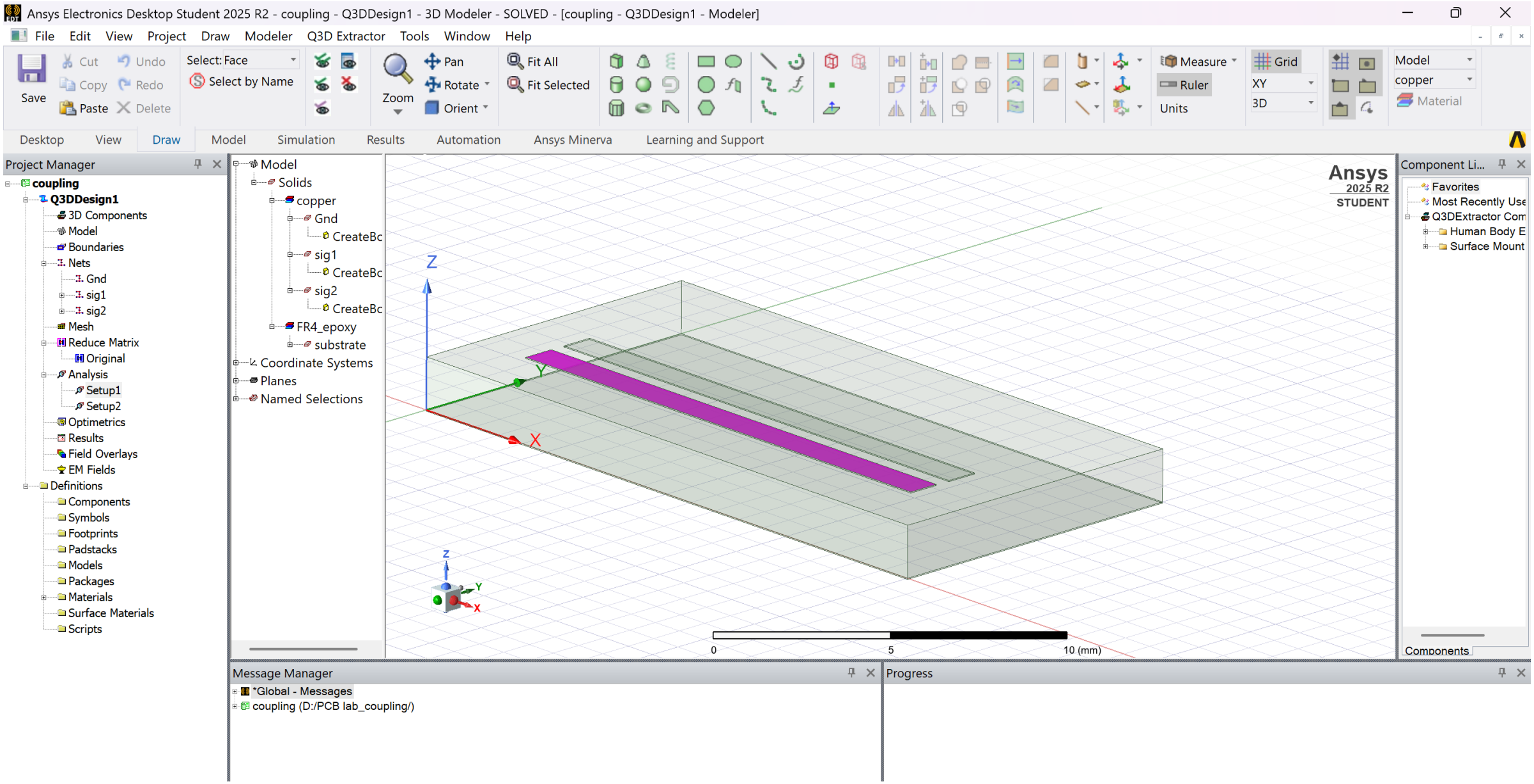
Ansys Electronics Desktop Student 2025 R2 - coupling - Q3DDesign1 - 3D Modeler - SOLVED - [coupling - Q3DDesign1 - Modeler]
File Edit View Project Draw Modeler Q3D Extractor Tools Window Help
Save
Cut
Copy
Paste
Undo
Redo
Delete
Select: Face
Select by Name
Zoom
Pan
Rotate
Orient
Fit All
Fit Selected
Measure
Ruler
Units
Grid
XY
3D
Model
copper
Material
Desktop View Draw Model Simulation Results Automation Ansys Minerva Learning and Support
Project Manager
coupling
Q3DDesign1
3D Components
Model
Boundaries
Nets
Gnd
sig1
sig2
Mesh
Reduce Matrix
Original
Analysis
Setup1
Setup2
Optimetrics
Results
Field Overlays
EM Fields
Definitions
Components
Symbols
Footprints
Padstacks
Models
Packages
Materials
Surface Materials
Scripts
Model
Solids
copper
Gnd
CreateBc
sig1
CreateBc
sig2
CreateBc
FR4_epoxy
substrate
Coordinate Systems
Planes
Named Selections
Ansys
2025 R2
STUDENT
Z
Y
X
0
5
10 (mm)
Component Li...
Favorites
Most Recently Use
Q3DExtractor Com
Human Body E
Surface Mount
Components
Message Manager
*Global - Messages
coupling (D:/PCB lab_coupling/)
Progress

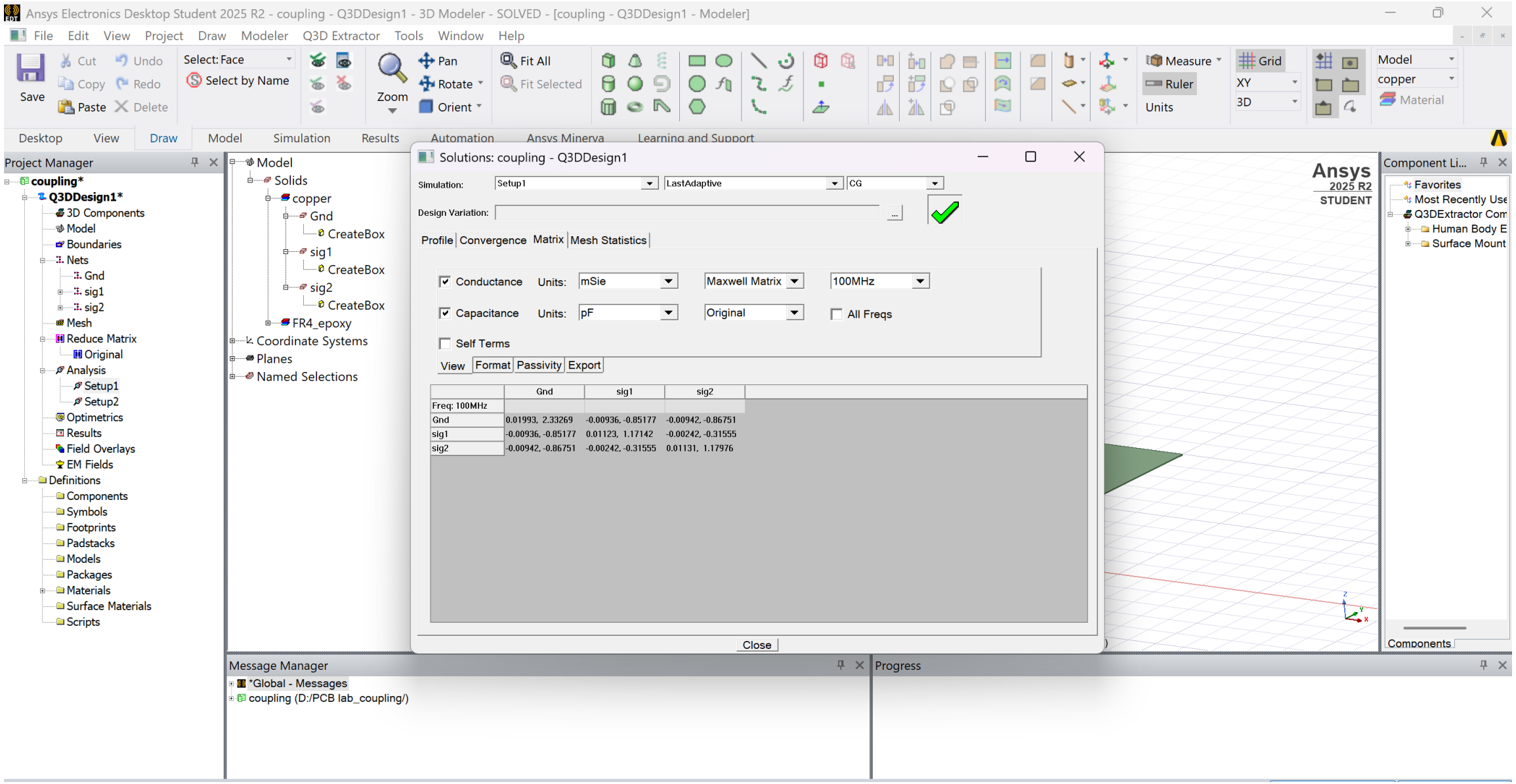
Ansys Electronics Desktop Student 2025 R2 - coupling - Q3DDesign1 - 3D Modeler - SOLVED - [coupling - Q3DDesign1 - Modeler]
Solutions: coupling - Q3DDesign1
Simulation: Setup1 LastAdaptive CG
Design Variation:
Profile Convergence Matrix Mesh Statistics
Conductance Units: mSie Maxwell Matrix 100MHz
Capacitance Units: pF Original All Freqs
Self Terms
View Format Passivity Export
Gnd sig1 sig2
Freq: 100MHz
Gnd 0.01993, 2.33269 -0.00936, -0.85177 -0.00942, -0.86751
sig1 -0.00936, -0.85177 0.01123, 1.17142 -0.00242, -0.31555
sig2 -0.00942, -0.86751 -0.00242, -0.31555 0.01131, 1.17976
Close
Project Manager
coupling*
Q3DDesign1*
3D Components
Model
Boundaries
Nets
Gnd
sig1
sig2
Mesh
Reduce Matrix
Original
Analysis
Setup1
Setup2
Optimetrics
Results
Field Overlays
EM Fields
Definitions
Components
Symbols
Footprints
Padstacks
Models
Packages
Materials
Surface Materials
Scripts
Model
Solids
copper
Gnd
CreateBox
sig1
CreateBox
sig2
CreateBox
FR4_epoxy
Coordinate Systems
Planes
Named Selections
Message Manager
*Global - Messages
coupling (D:/PCB lab_coupling/)
Progress
Ansys
2025 R2
STUDENT
Component Li...
Favorites
Most Recently Use
Q3DExtractor Com
Human Body E
Surface Mount
Components

Summary of Project 03:

Results: The extracted matrix showed that both traces had similar self terms, which is expected because their geometry was almost the same. The mutual term between sig1 and sig2 showed noticeable coupling between the two traces. Important values from the result: Self term of sig1 ≈ 1.171 pF, Self term of sig2 ≈ 1.180 pF , Mutual coupling between sig1 and sig2 ≈ 0.316 pF

Conclusion: The lab showed that when two traces are placed close to each other, parasitic coupling increases. This can affect signal integrity. Better PCB design can reduce this effect by increasing spacing between traces and improving the return path.