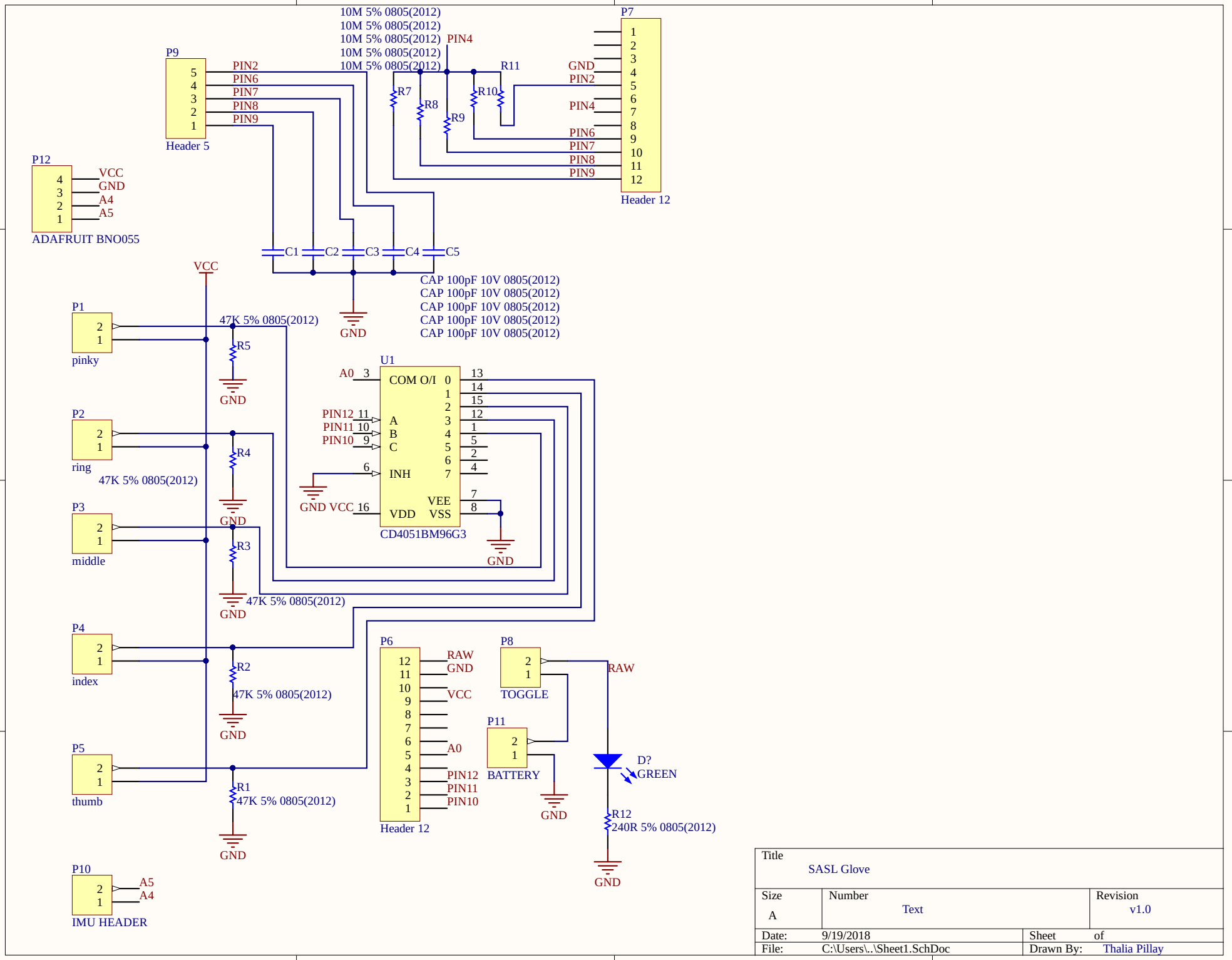

Title		
SASL Glove		
Size: A	Number: Text	Revision: v1.0
Date: 9/19/2018		Sheet of
File: C:\Users\..\Sheet1.SchDoc		Drawn By: Thalia Pillay