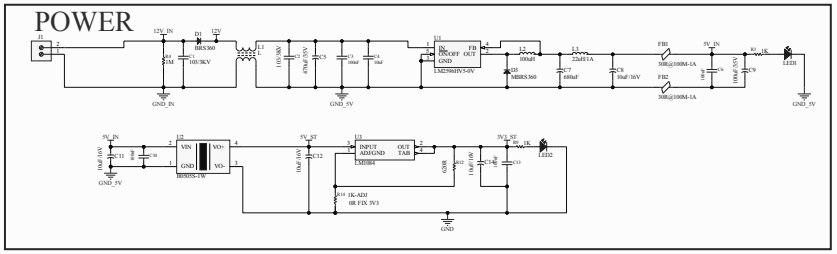

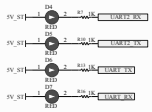

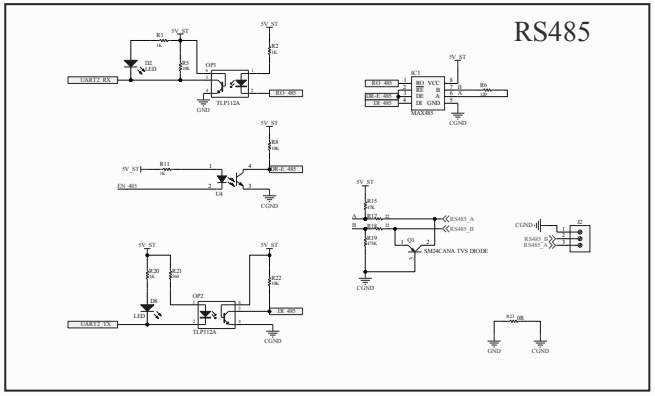

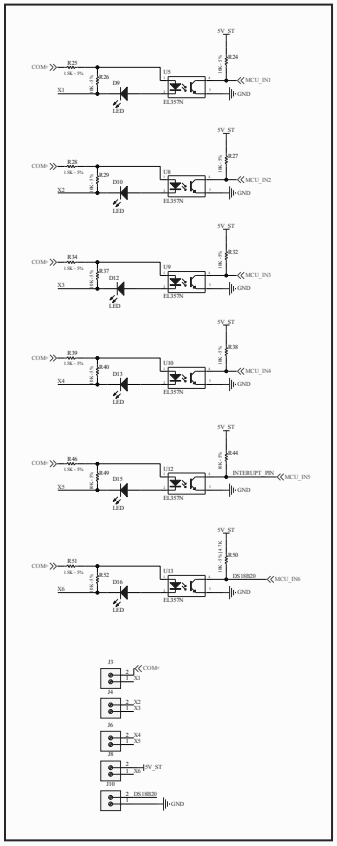

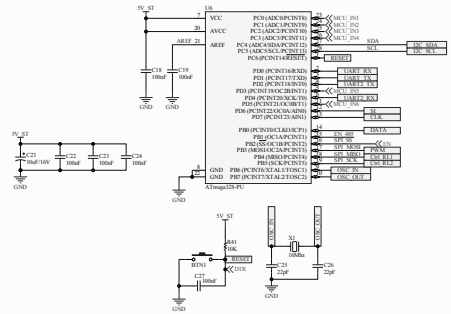

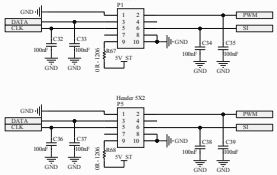

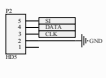

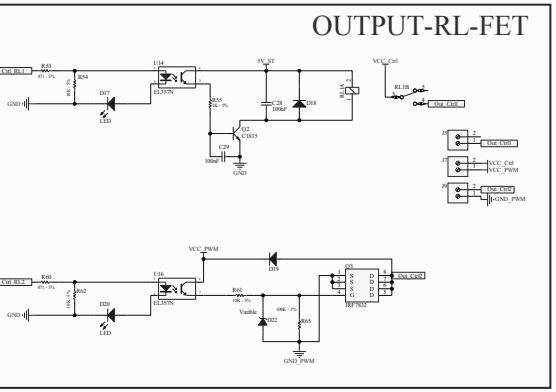

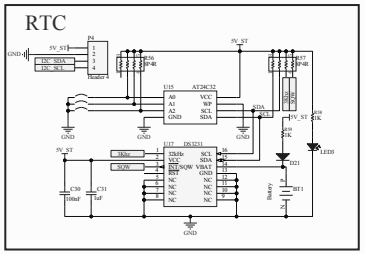

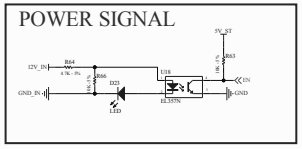

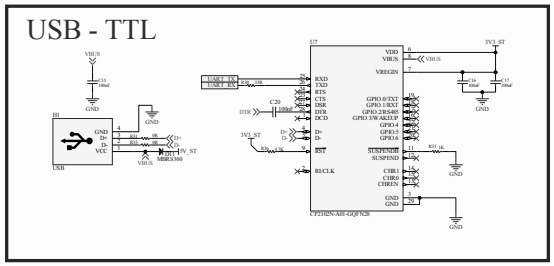

Title *		
Size: A1	Number *	Revision *
Date: 8/26/2021	Time: 2:45:30 PM	Sheet * of *
File: D:\02 OLDAV\01 Project\AVAtmega328P\Atmega328P.SchDoc		

Altium