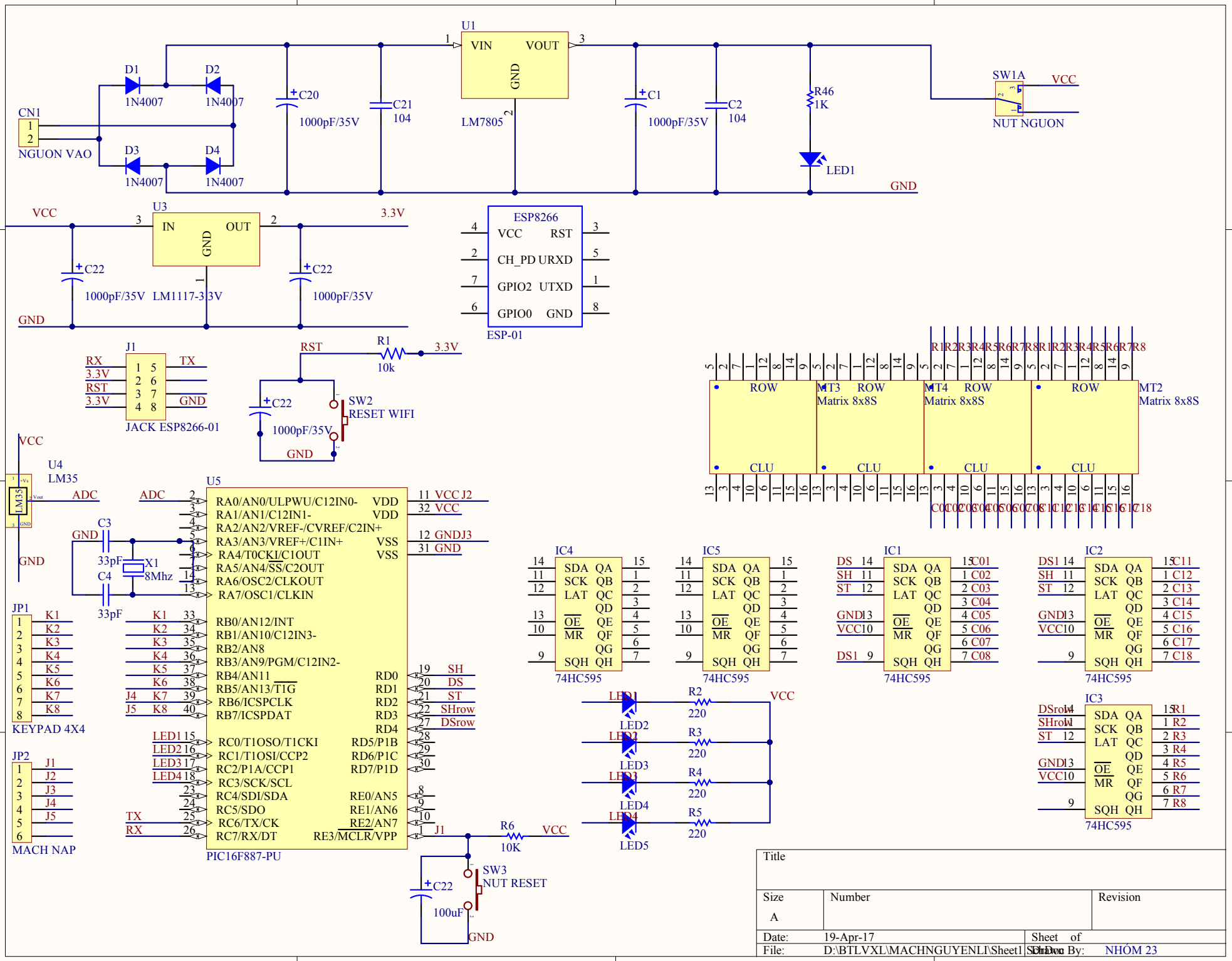
U1
VIN
VOUT
GND
LM7805
CN1
NGUON VAO
D1
D2
D3
D4
1N4007
C20
1000pF/35V
C21
104
C1
C2
R46
1K
LED1
SW1A
VCC
NUT NGUON
GND
U3
IN
OUT
3.3V
C22
1000pF/35V
LM1117-3.3V
ESP8266
VCC
RST
CH_PD
URXD
GPIO2
UTXD
GPIO0
ESP-01
J1
RX
TX
JACK ESP8266-01
R1
10k
SW2
RESET WIFI
U4
LM35
ADC
U5
PIC16F887-PU
C3
C4
33pF
X1
8Mhz
JP1
KEYPAD 4X4
JP2
MACH NAP
MT3
MT4
MT2
Matrix 8x8S
ROW
CLU
IC4
IC5
IC1
IC2
IC3
74HC595
LED2
LED3
LED4
LED5
R2
R3
R4
R5
220
R6
10K
SW3
NUT RESET
100uF
Title
Size
A
Number
Revision
Date: 19-Apr-17
Sheet of
File: D:\BTLVXL\MACHNGUYENLI\Sheet1.SchDoc
Drawn By: NHÓM 23