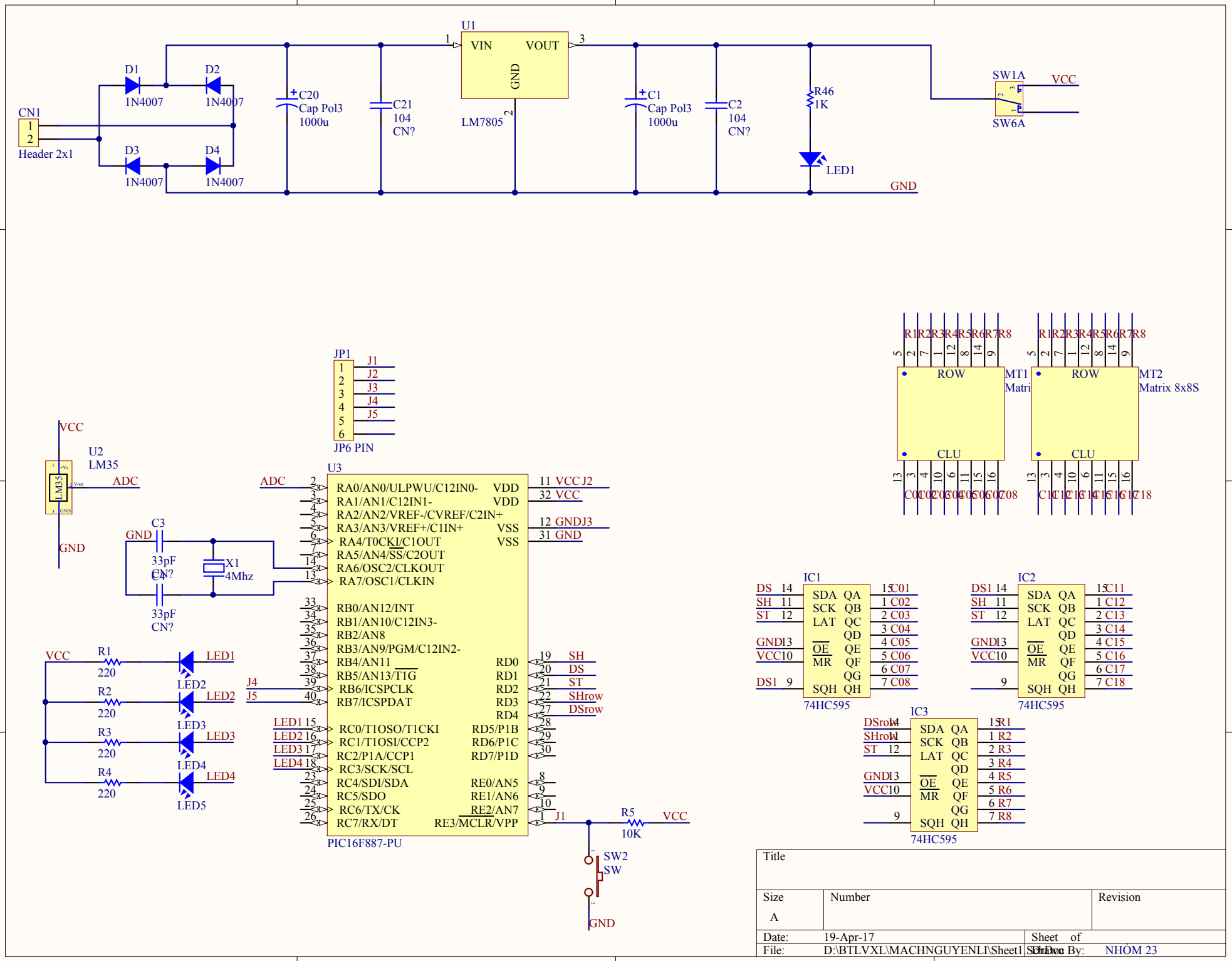
U1
VIN
VOUT
GND
LM7805
CN1
Header 2x1
D1
D2
D3
D4
1N4007
C20
Cap Pol3
1000u
C21
104
CN?
C1
Cap Pol3
1000u
C2
104
CN?
R46
1K
LED1
SW1A
SW6A
VCC
GND
JP1
JP6 PIN
J1
J2
J3
J4
J5
U2
LM35
ADC
U3
PIC16F887-PU
RA0/AN0/ULPWU/C12IN0-
RA1/AN1/C12IN1-
RA2/AN2/VREF-/CVREF/C2IN+
RA3/AN3/VREF+/C1IN+
RA4/T0CKI/C1OUT
RA5/AN4/SS/C2OUT
RA6/OSC2/CLKOUT
RA7/OSC1/CLKIN
RB0/AN12/INT
RB1/AN10/C12IN3-
RB2/AN8
RB3/AN9/PGM/C12IN2-
RB4/AN11
RB5/AN13/T1G
RB6/ICSPCLK
RB7/ICSPDAT
RC0/T1OSO/T1CKI
RC1/T1OSI/CCP2
RC2/P1A/CCP1
RC3/SCK/SCL
RC4/SDI/SDA
RC5/SDO
RC6/TX/CK
RC7/RX/DT
VDD
VSS
RD0
RD1
RD2
RD3
RD4
RD5/P1B
RD6/P1C
RD7/P1D
RE0/AN5
RE1/AN6
RE2/AN7
RE3/MCLR/VPP
VCC J2
VCC
GND J3
GND
SH
DS
ST
SHrow
DSrow
LED1
LED2
LED3
LED4
LED5
R1
R2
R3
R4
R5
220
10K
C3
33pF
CN?
X1
4Mhz
SW2
SW
MT1
Matri
MT2
Matrix 8x8S
ROW
CLU
IC1
IC2
IC3
74HC595
SDA
SCK
LAT
OE
MR
SQH
QA
QB
QC
QD
QE
QF
QG
QH
Title
Size
A
Number
Revision
Date: 19-Apr-17
Sheet of
File: D:\BTLVXL\MACHNGUYENLI\Sheet1.SchDoc
Drawn By: NHÓM 23