Power_Supply_1

File: Power_Supply_1.kicad_sch

ADC_Channels

File: ADC_Channels.kicad_sch

Power_Supply_2

File: Power_Supply_2.kicad_sch

DevBuddy_Logic

File: DevBuddy_Logic.kicad_sch

DevBuddy Mk1

PITHA INDUSTRIES		
Sheet: / File: DevBuddy.kicad_sch		
Title: DevBuddy		
Size: A3	Date: 2026-02-08	**Rev: 1**
KiCad E.D.A. 9.0.7		Id: 1/5

3V3 Logic Power supply @1A / 3.3W (could go up to 6.6W) CHANNEL A

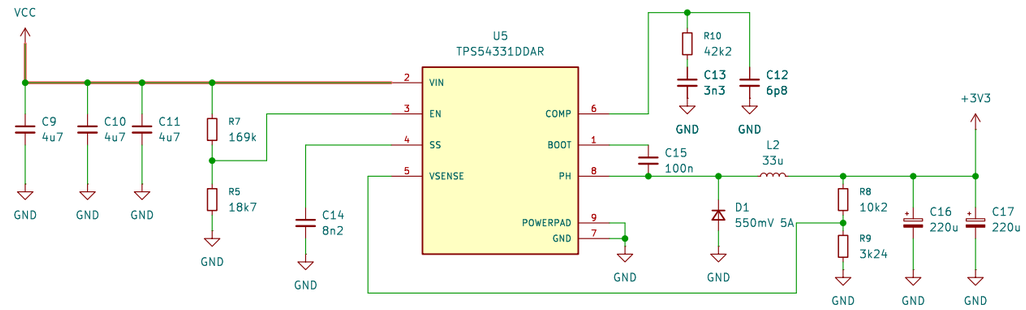

12V Supply for Low Voltage Clean Channels @2A / 24W CHANNEL D

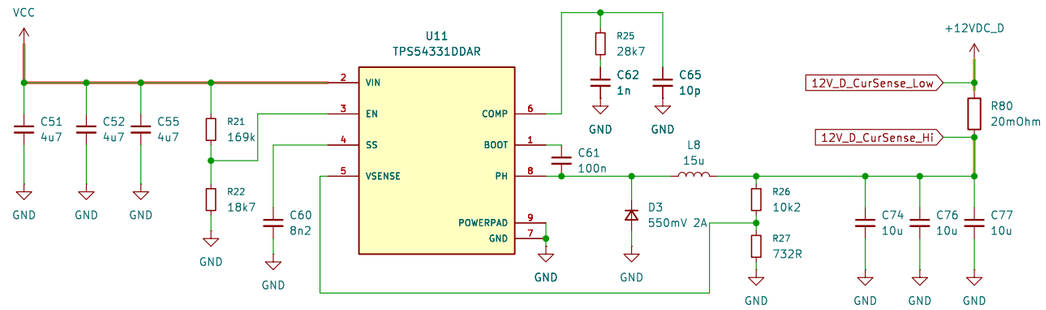

12V Supply for Low Voltage Clean Channels @2A / 24W CHANNEL C

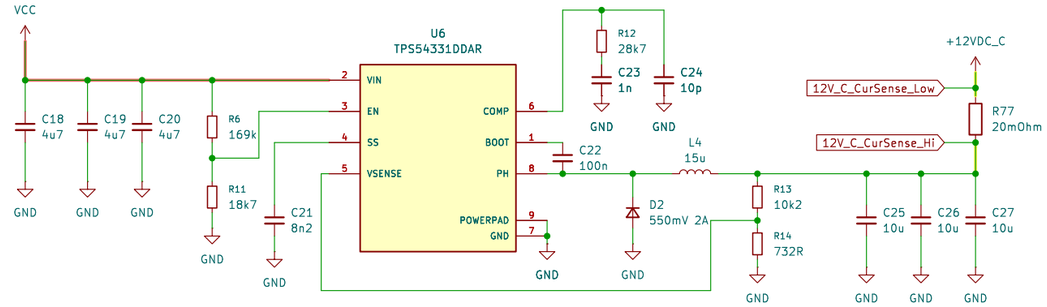

3V3 clean Channel Power supply @3A / 9.9W CHANNEL C

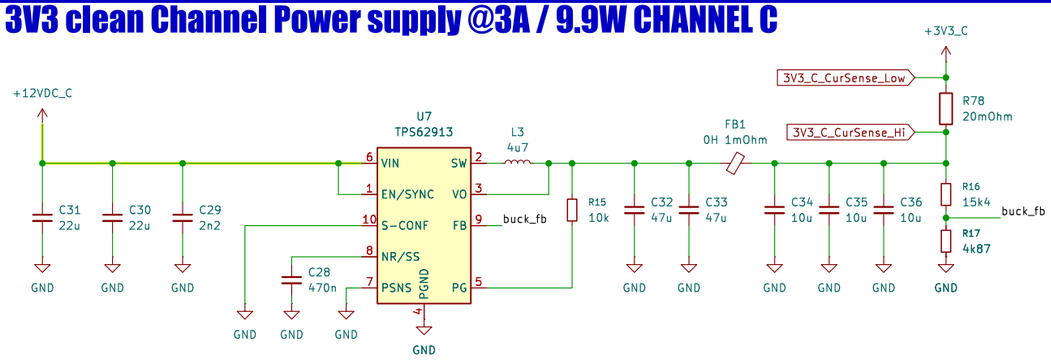

5V clean Channel Power supply @3A / 15W CHANNEL D

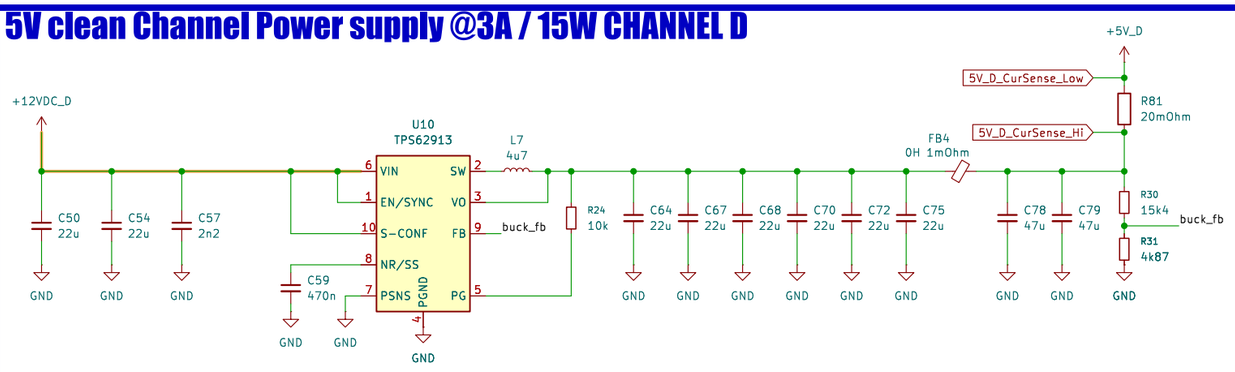

5V clean Channel Power supply @3A / 15W CHANNEL C

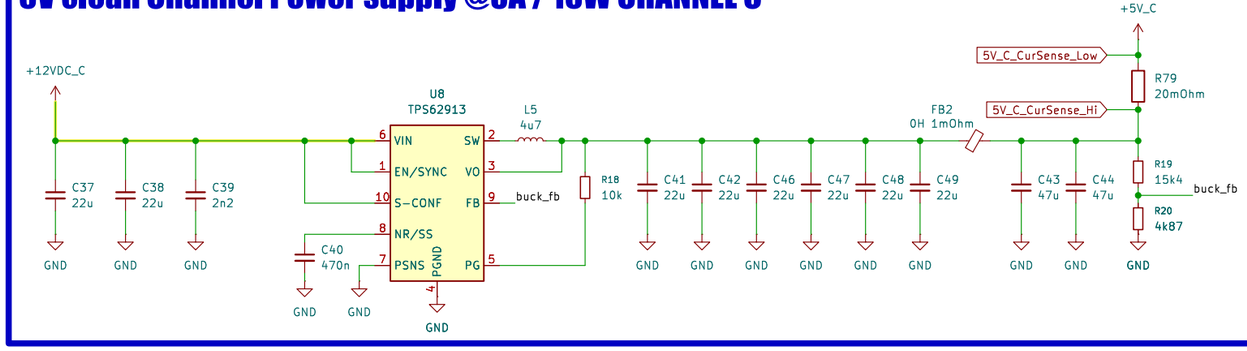

Sheet: /Power_Supply_1/
File: Power_Supply_1.kicad_sch

Title: DevBuddy

Size: A3	Date: 2026-02-08	Rev: 1
KiCad E.D.A. 9.0.7		Id: 2/5

ADC Current MUX AND INA

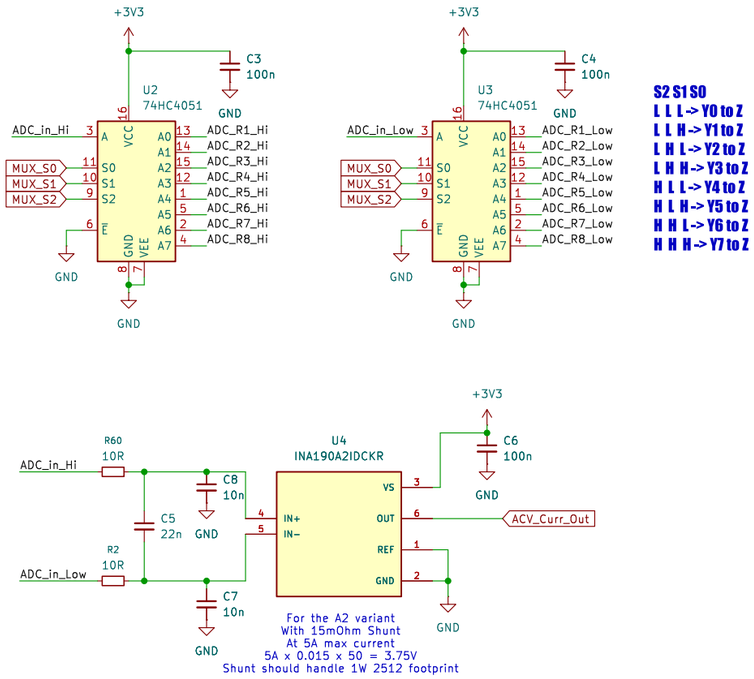

ADC Voltage Mux

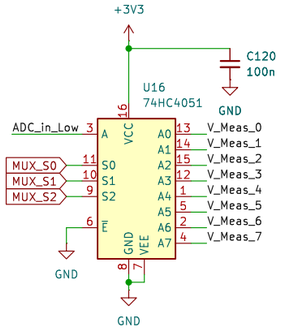

Safe voltage channels for MUX

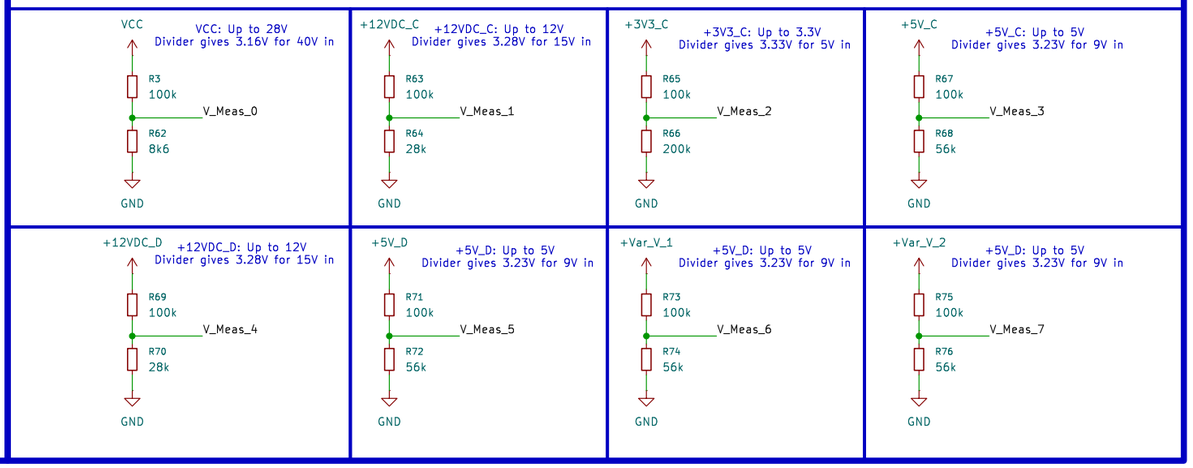

Current differential voltages

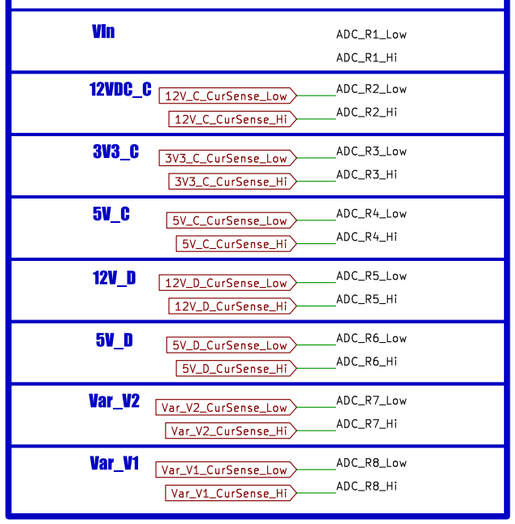

Sheet: /ADC_Channels/
File: ADC_Channels.kicad_sch

Title: DevBuddy

Size: A3	Date: 2026-02-08	Rev: 1
KiCad E.D.A. 9.0.7		Id: 3/5

DAC1 controlling output voltage 1

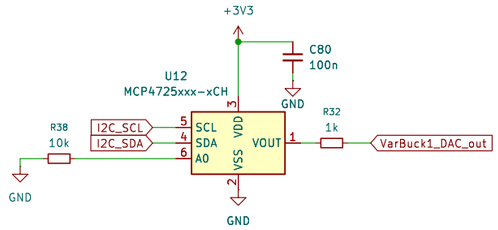

DAC2 controlling output voltage 2

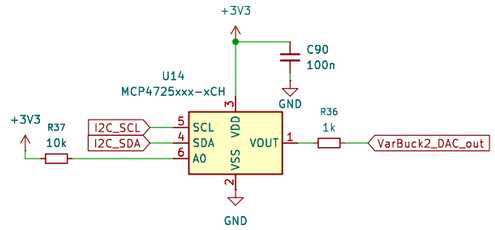

VarBuck2: Variable Clean Voltage from 0.8V up to 3.8V+ | Addr 74h

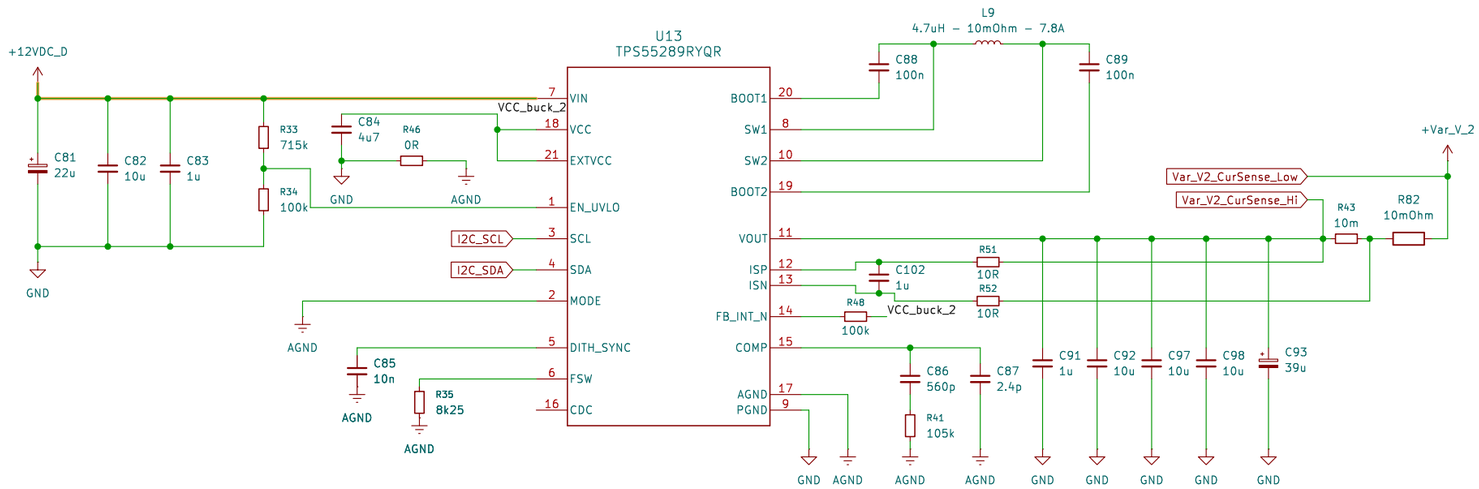

VarBuck1: Variable Clean Voltage from 0.8V up to 3.8V+ | Addr 75h

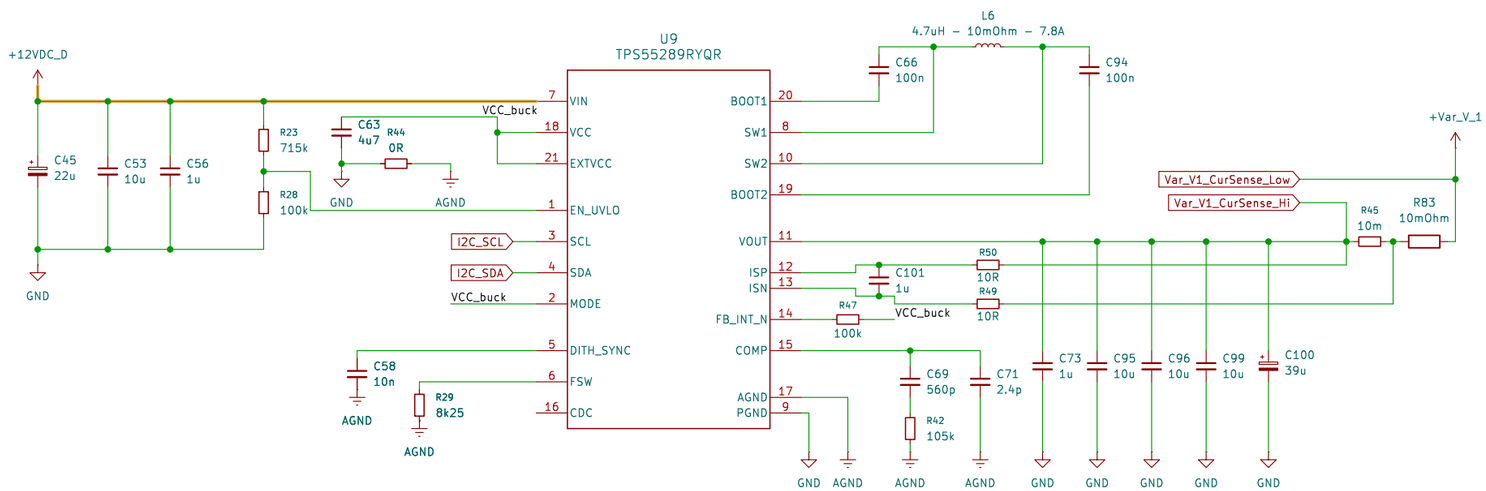

Sheet: /Power_Supply_2/
File: Power_Supply_2.kicad_sch

Title: DevBuddy

Size: A3	Date: 2026-02-08	Rev: 1
KiCad E.D.A. 9.0.7		Id: 4/5

RP2354B Design

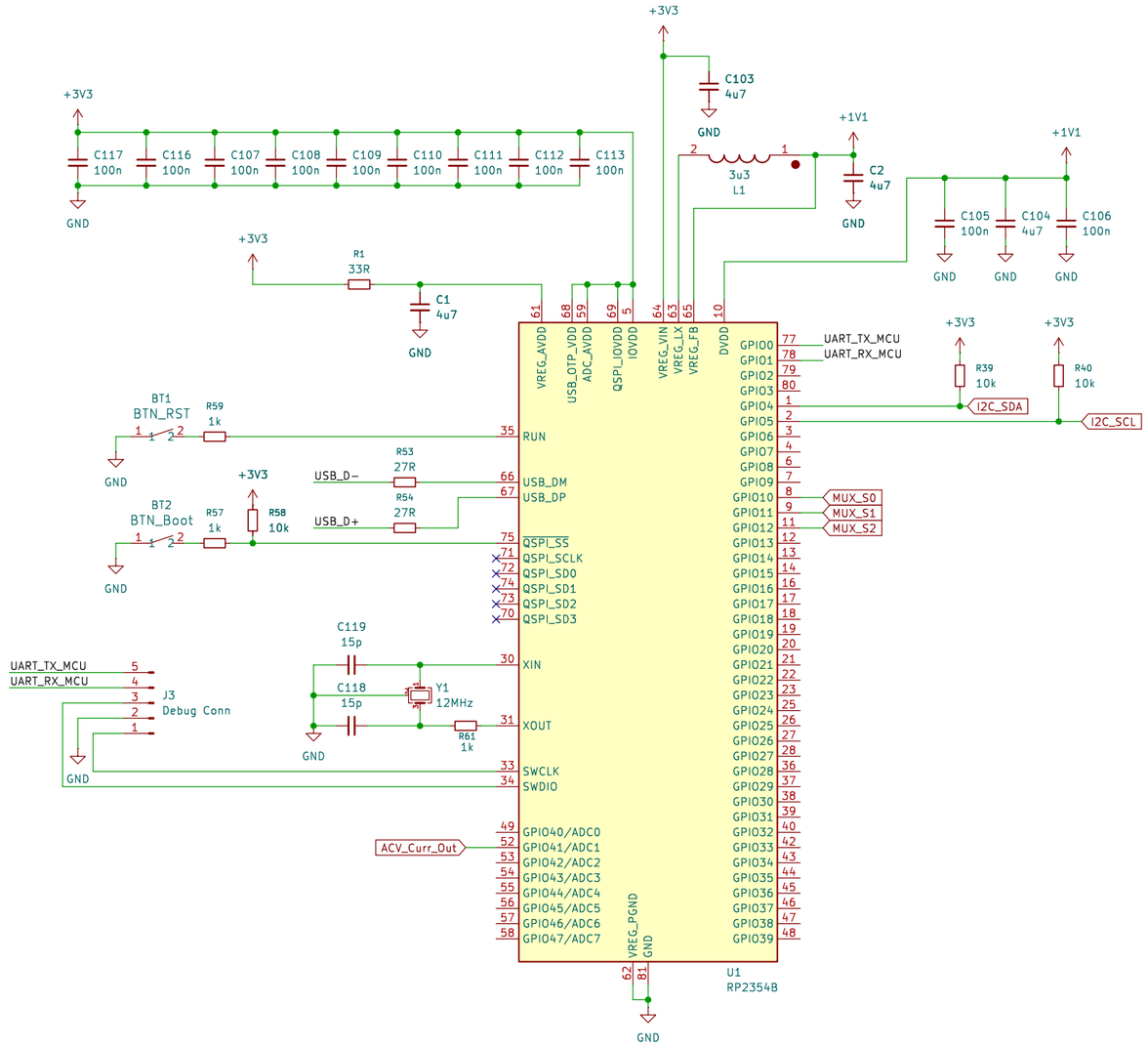

USB C and USB logic power suuply

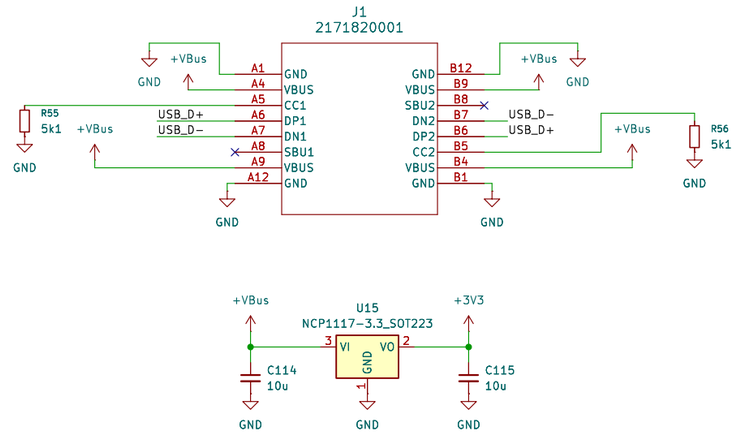

Sheet: /DevBuddy_Logic/
File: DevBuddy_Logic.kicad_sch

Title: DevBuddy

Size: A3	Date: 2026−02−08	Rev: 1
KiCad E.D.A. 9.0.7		Id: 5/5