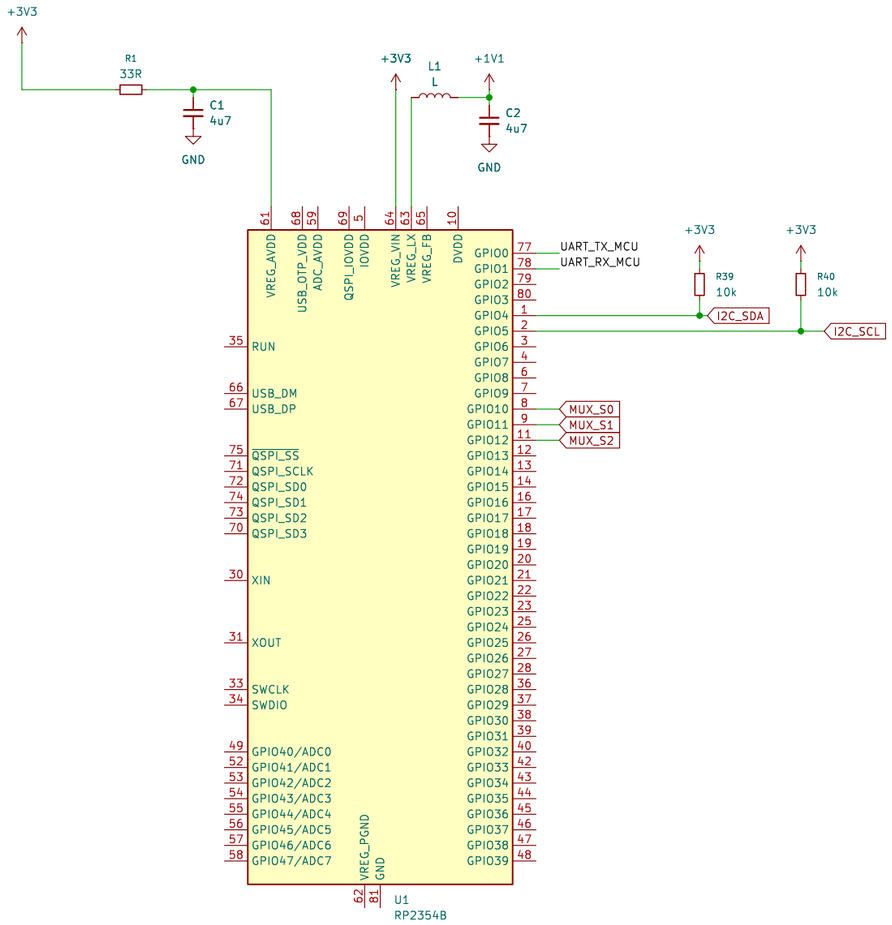

Power_Supply_1

File: Power_Supply_1.kicad_sch

ADC_Channels

File: ADC_Channels.kicad_sch

Power_Supply_2

File: Power_Supply_2.kicad_sch

PITHA INDUSTRIES

Sheet: /
File: DevBuddy.kicad_sch

Title: DevBuddy

Size: A3	Date: 2026-02-08	**Rev: 1**
KiCad E.D.A. 9.0.7		Id: 1/4

3V3 Logic Power supply @1A / 3.3W (could go up to 6.6W) CHANNEL A

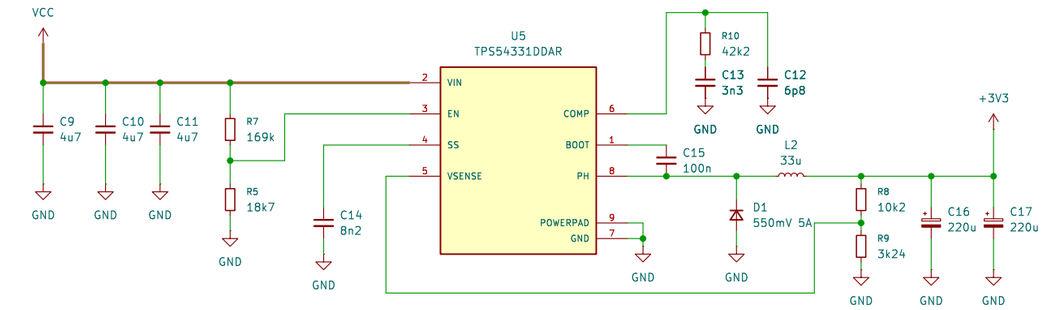

12V Supply for Low Voltage Clean Channels @2A / 24W CHANNEL D

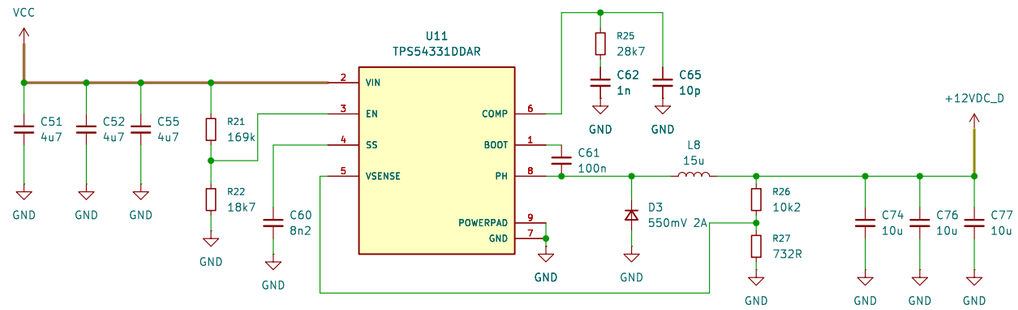

12V Supply for Low Voltage Clean Channels @2A / 24W CHANNEL C

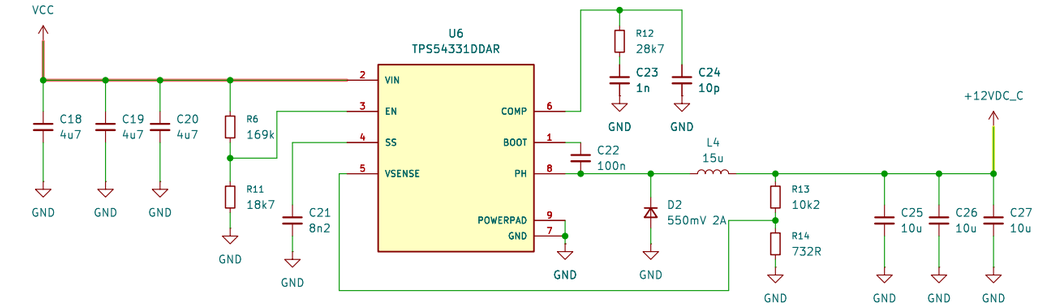

3V3 clean Channel Power supply @3A / 9.9W CHANNEL C

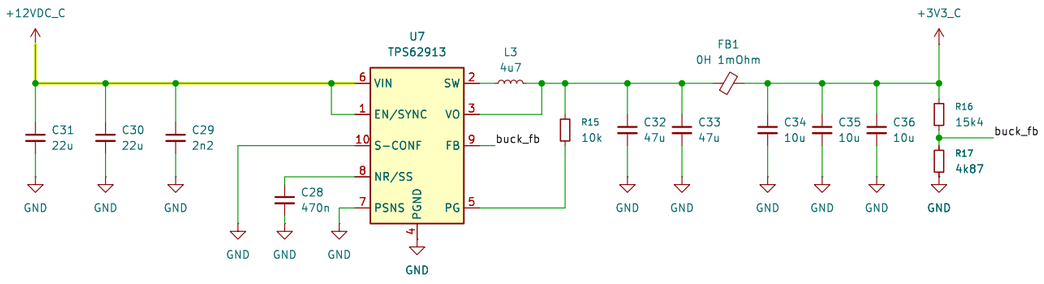

5V clean Channel Power supply @3A / 15W CHANNEL D

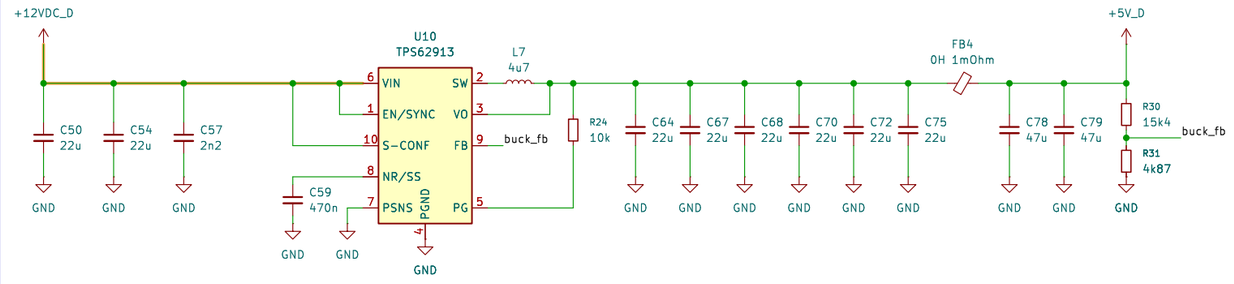

5V clean Channel Power supply @3A / 15W CHANNEL C

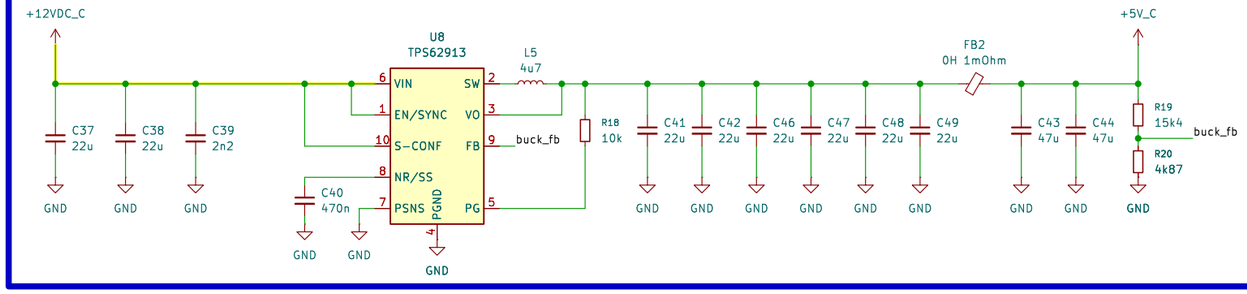

Sheet: /Power_Supply_1/
File: Power_Supply_1.kicad_sch

Title: DevBuddy

Size: A3	Date: 2026-02-08	Rev: 1
KiCad E.D.A. 9.0.7		Id: 2/4

ADC MUX AND INA

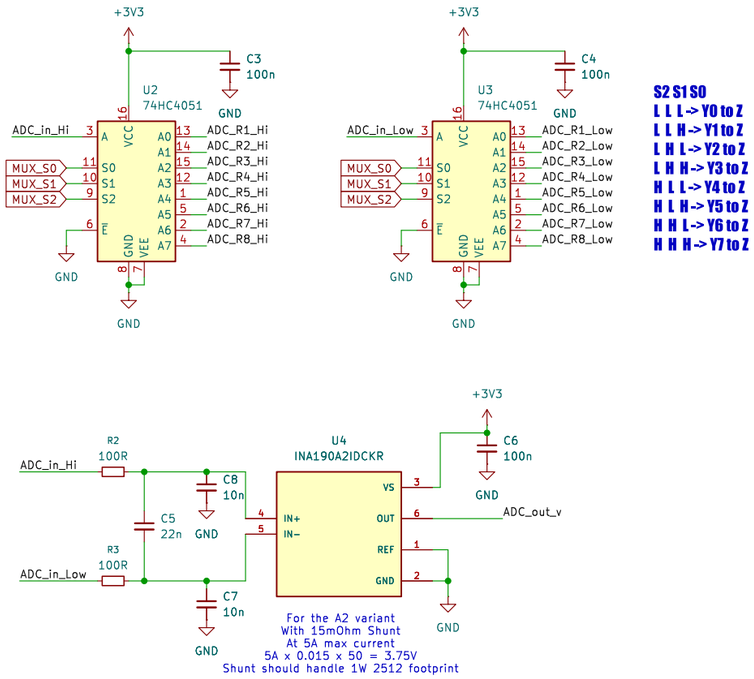

S2 S1 S0

L L L -> Y0 to Z
L L H -> Y1 to Z
L H L -> Y2 to Z
L H H -> Y3 to Z
H L L -> Y4 to Z
H L H -> Y5 to Z
H H L -> Y6 to Z
H H H -> Y7 to Z

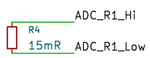

Sheet: /ADC_Channels/
File: ADC_Channels.kicad_sch

Title: DevBuddy

Size: A3	Date: 2026-02-08	**Rev: 1**
KiCad E.D.A. 9.0.7		Id: 3/4

DAC1 controlling output voltage 1

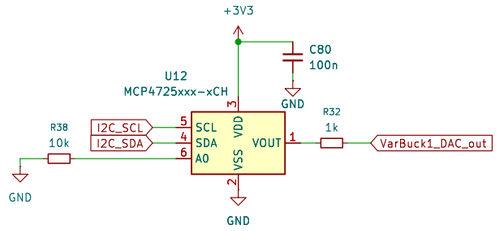

DAC2 controlling output voltage 2

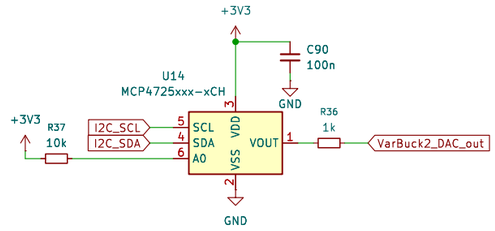

VarBuck2: Variable Clean Voltage from 0.8V up to 3.8V+ | Addr 74h

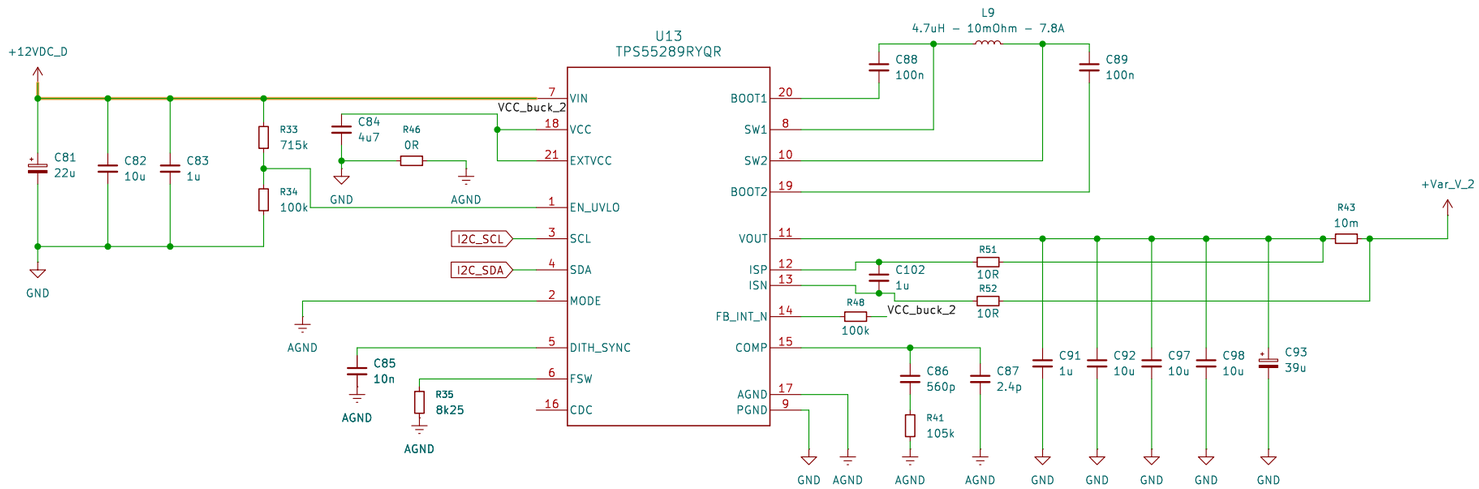

VarBuck1: Variable Clean Voltage from 0.8V up to 3.8V+ | Addr 75h

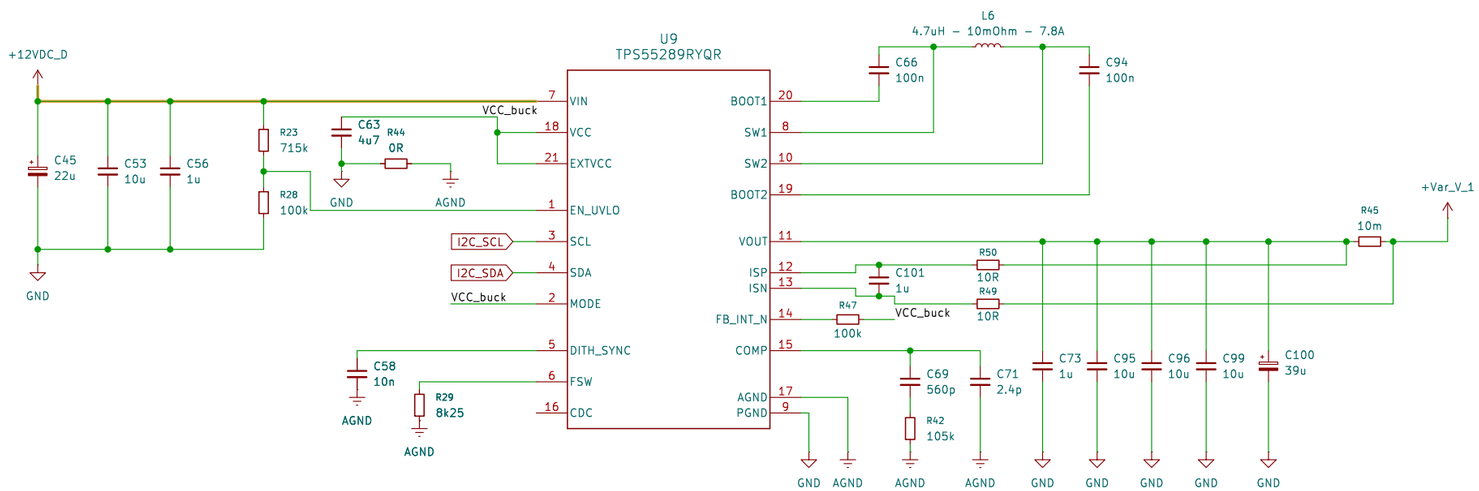

Sheet: /Power_Supply_2/
File: Power_Supply_2.kicad_sch

Title: DevBuddy

Size: A3	Date: 2026-02-08	Rev: 1
KiCad E.D.A. 9.0.7		Id: 4/4