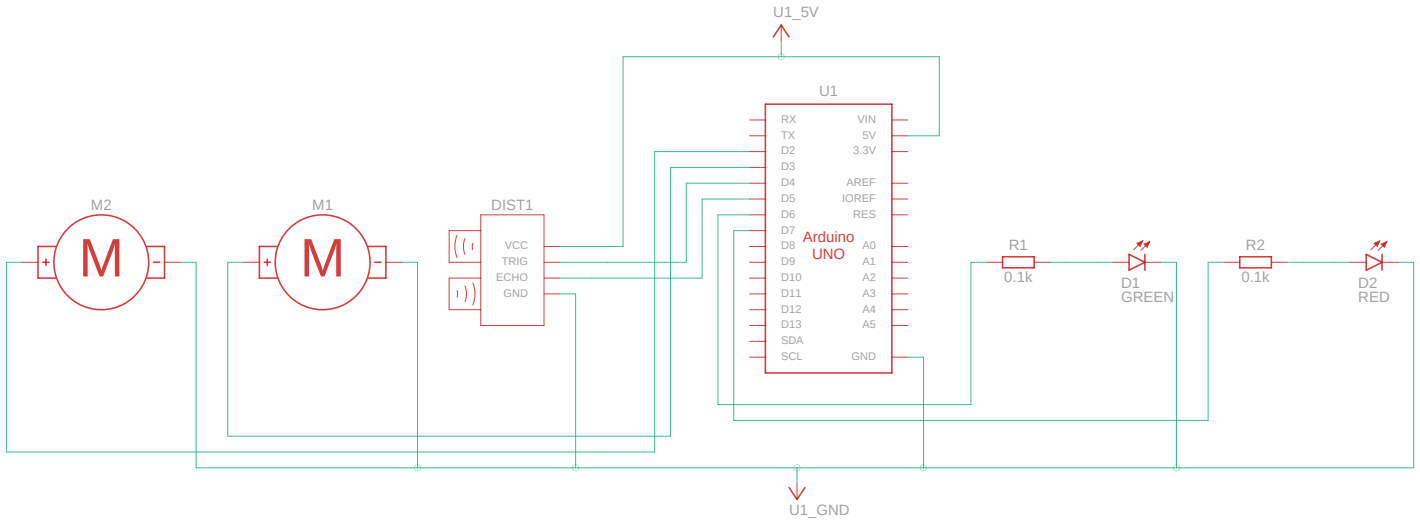

Title: Obstacle Detector

Circuit Diagram

Sheet: 1/1