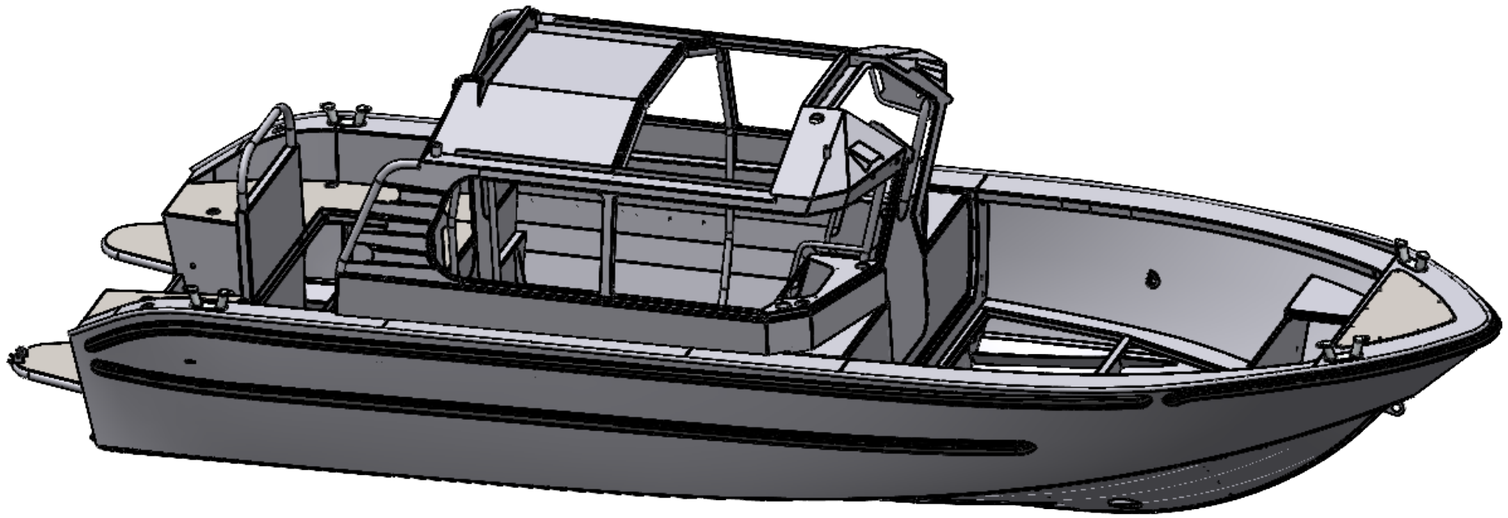

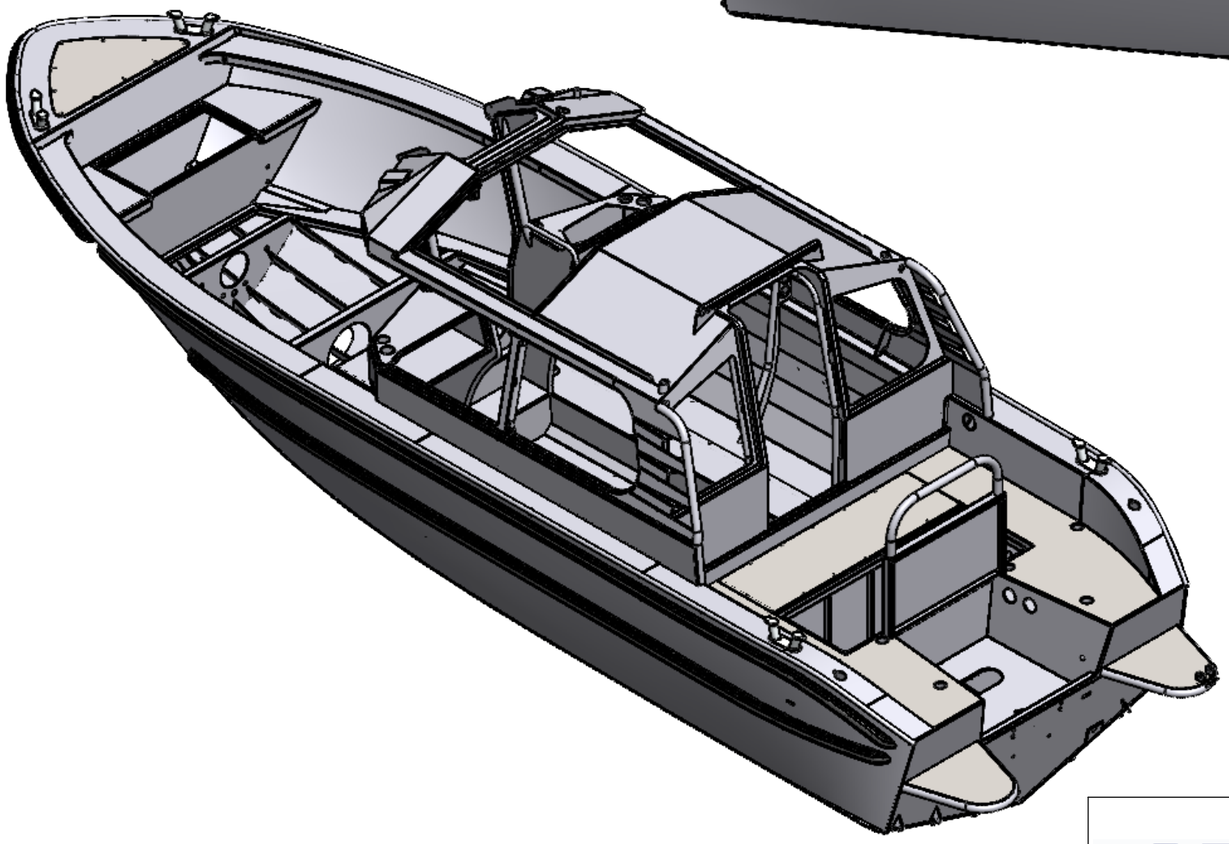

This document and its contents are the exclusive property of Arronet Snidesteknik AB and must not be copied, reproduced, transmitted or communicated to any other party or used for purposes not expressly permitted by us.

Arronet
Arronet Teknik AB
Varvsvägen 2
742 43 Öregrund
Telefon 0173-465 90
info@arronet.se

Designed by	Date	
Drawn by: Martin Bevemyr	Date	
Approved by	Date	
Weight: Kg	Material	Thickness: t=
Status		Tolerance
Scale: 1:30	Format: A3	Sheet/Sheet: 1/1
Rev Part		

Title/Description

24spcH2021_Hel

Drawing no	Rev

SOLIDWORKS Educational Product. For Instructional Use Only.

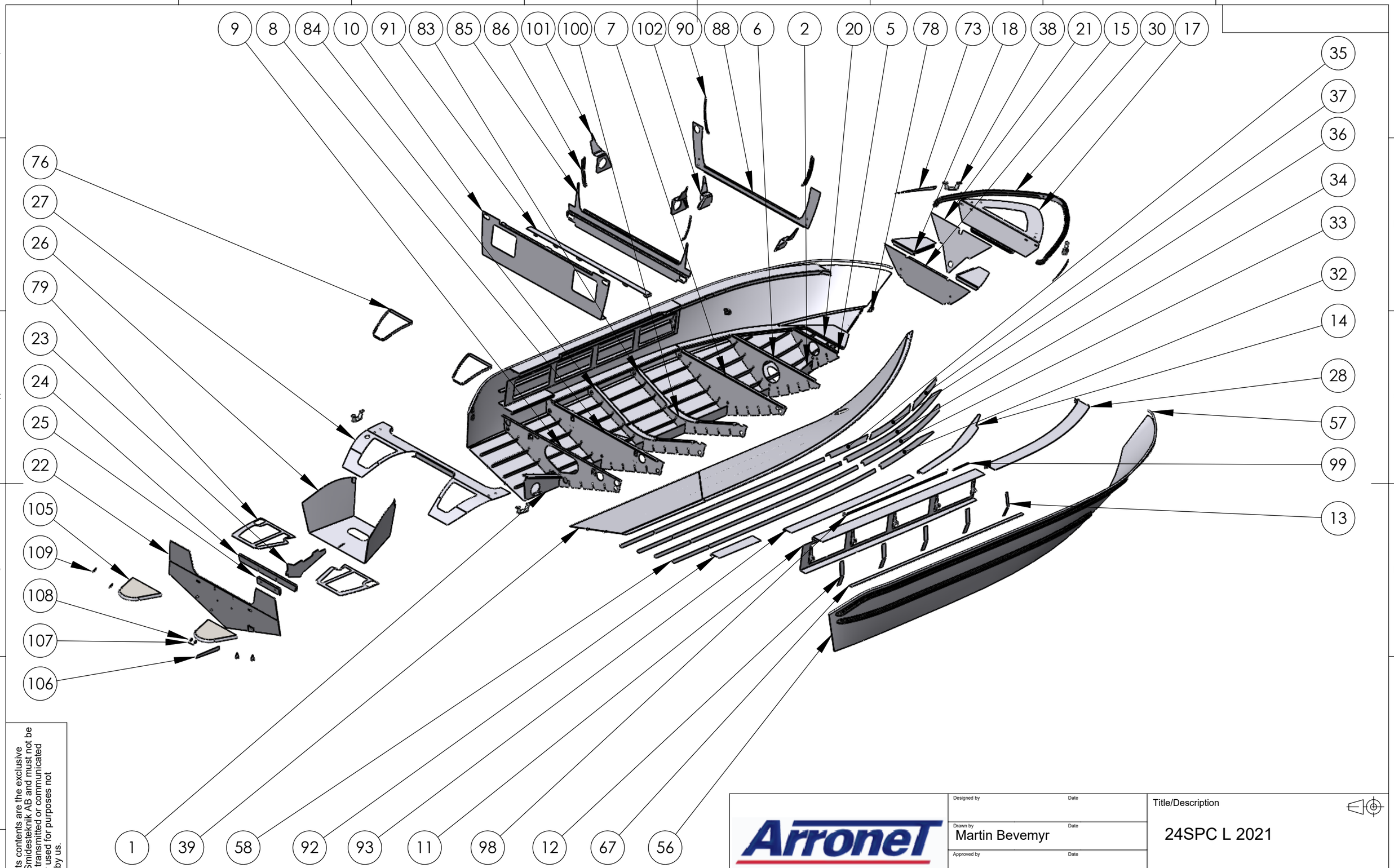

This document and its contents are the exclusive property of Arronet Smidesteknik AB and must not be copied, reproduced, transmitted or communicated to any other party or used for purposes not expressly permitted by us.

Arronet
Arronet Teknik AB
Varvsvägen 2
742 43 Öregrund
Telefon 0173-465 90
info@arronet.se

Designed by	Date		Title/Description
Drawn by: Martin Bevemyr	Date		24SPC L 2021
Approved by	Date		
Weight: Kg	Material	Thickness: t=	
Status		Tolerance	Drawing no / Rev
Scale: 1:200	Format: A3	Sheet/Sheet: 1/2	Rev Part

SOLIDWORKS Educational Product. For Instructional Use Only.

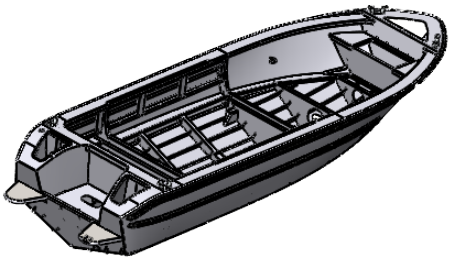

Pos nr	Antal	Titel/Benämning, beteckning
1	1	Köl akter 24 sp-c SP-L
2	1	Köl för 24 SP-c 2018-19-7
5	1	24 sp-c spant 1 2018-19
6	1	24 sp-c spant 2 2018-19
7	1	24 sp-c spant 3 2018-19
8	1	24 sp-c spant 6 2018-19
9	1	24 sp-c spant 7 2018-19
10	1	24 spc akterskott (4.0)
11	1	24 spc skarndäck mid (M-4.0) del 1
12	4	24 spc skarndäck mid (M-4.0) del 2
13	1	24 spc skarndäck mid (M-4.0) del 3
14	1	24 sp-c durkupplag för (M-4.0) 2018-19
15	1	24 sp-c Förtoft låsbar 2018-19_2
17	1	24sp-c Förtoft låsbar 2018-19
18	1	Mirror24 sp-c Förtoft låsbar 2018-29_1
20	1	24 sp-c durkupplag för1 2018-19
21	1	24 sp-c Förtoft låsbar 2018-19_3
22	1	24 sp-c Akterspegel 2018-19
23	1	24 sp-c Akterspegel 2018-19 del 2
24	1	24 sp-c Akterspegel 2018-19 del 3
25	1	24 sp-c Akterspegel 2018-19 del 4
26	1	24,5 sp+spo Motorbrunn
27	1	24,5 sp+spo Skarndäck 2.3
28	1	24,5 sp+spo Skarndäck 3.3 (SP)
30	1	24 sp-c Förtoft låsbar 2018-19_4
32	1	Stringer för 6 24 SP-c 2018-19-1
33	1	Stringer för 5 24 SP-c 2018-19-2
34	1	Stringer för 4 24 SP-c 2018-19-3
35	1	Stringer för 1 24 SP-c 2018-19-4
36	1	Stringer för 2 24 SP-c 2018-19-8
37	1	Stringer för 324 SP-c 2018-19-9
38	2	knap 2015
39	1	SB botten plåt
56	1	Bordsida 24spcL2021
57	1	MirrorPart23^24spcL2021
58	1	Stringer 50x8 24spcL2021
67	1	bords stringer 50x8 24 SP-C
73	1	24 sp-c Förtoft låsbar 2018-19_bordsinpassning
76	1	Skardäck lucka list 24spcL2021
78	1	Stävögla
79	1	24,5 sp+spo Durk 4.7
83	1	24 spc spant 4 2018-19
84	1	24 spc spant 5 2018-19
85	1	24 spc cabinkonv akter (4.0) del 1
86	1	24 spc cabinkonv akter (4.0) del 2
88	1	24 spc cabinkonv för (4.0)
90	1	Mirror24 spc cabinkonv för (4.0) del 1
91	1	24 spc cabinkonv akter (4.0) del 3
92	1	24 spc durkupplag mid (M-4.0) del 1
93	1	24 spc durkupplag mid (M-4.0) del 2
98	1	MirrorCabinkonv skarndäck 23-24 SPC del 1
99	1	MirrorCabinkonv skarndäck 23-24 SPC del 2
100	2	Spantdel 4-5 23-24 SPC (5.0)
101	1	24 spc cabinkonv gummitass (M-5.0)
102	1	24 spc cabinkonv gummitass (M-5.0)_1
105	2	24,5 cx (ub) Badbrygga
106	2	Trimplan (små delarna) del 1
107	2	badstege förtärkning 2020 del 2
108	4	badstege förtärkning 2020 del 3
109	4	Trimplan (små delarna)

This document and its contents are the exclusive property of Arronet Smidesteknik AB and must not be copied, reproduced, transmitted or communicated to any other party or used for purposes not expressly permitted by us.

Designed by | Date

Drawn by: Martin Bevemyr | Date

Approved by | Date

Weight: Kg | Material | Thickness: t=

Status | Tolerance

Scale: 1:200 | Format: A4 | Sheet/Sheet: 2/2 | Rev Part

Title/Description

24SPC L 2021

Drawing no | Rev

Arronet
Arronet Teknik AB
Varvsvägen 2
742 43 Öregrund
Telefon 0173-465 90
info@arronet.se

SOLIDWORKS Educational Product. For Instructional Use Only.

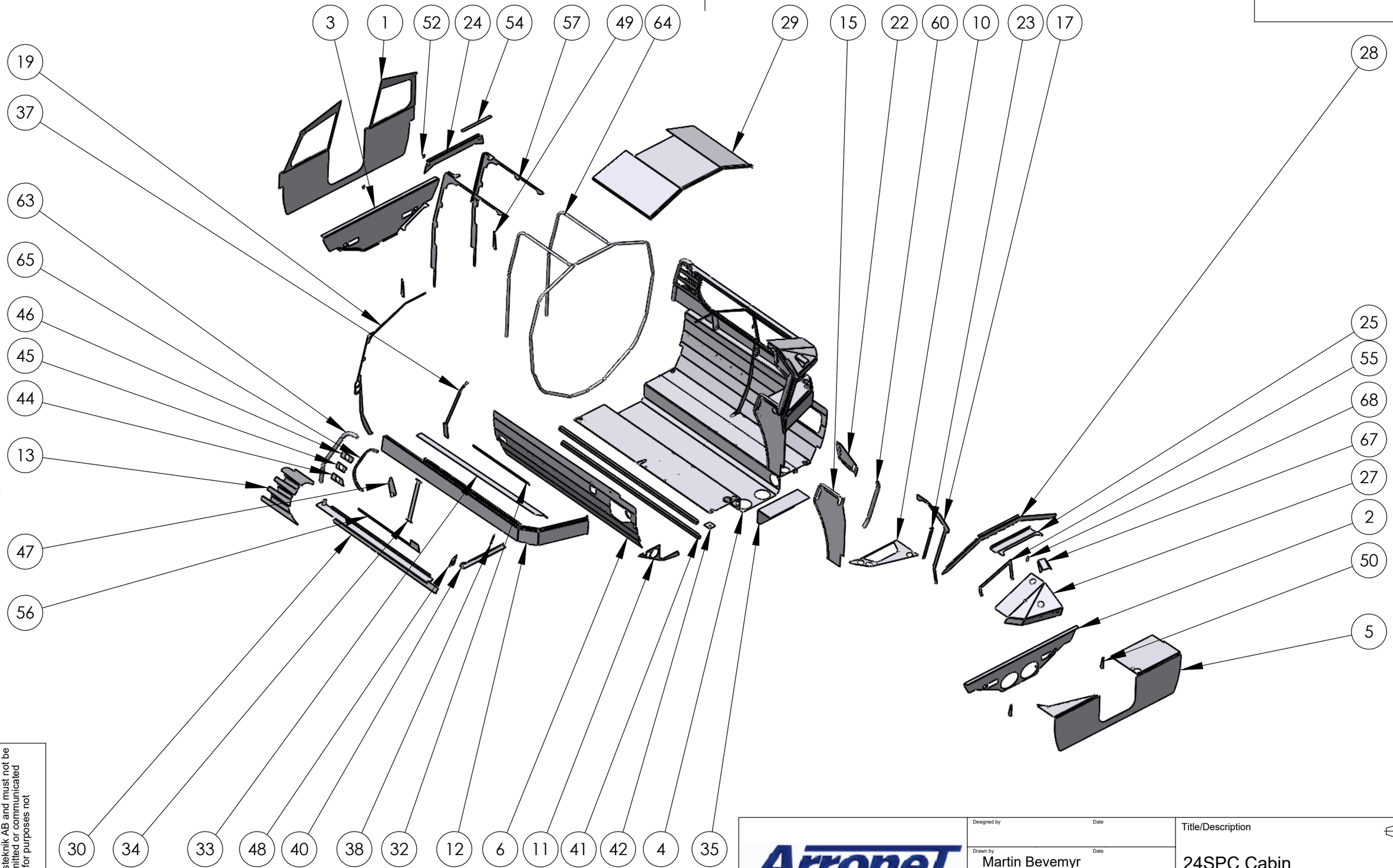

This document and its contents are the exclusive property of Arronet Smidesteknik AB and must not be copied, reproduced, transmitted or communicated to any other party or used for purposes not expressly permitted by us.

Arronet
Arronet Teknik AB
Varvsvägen 2
742 43 Öregrund
Telefon 0173-465 90
info@arronet.se

Designed by	Date		Title/Description
Drawn by: Martin Bevemyr	Date		24SPC Cabin
Approved by	Date		
Weight: Kg	Material	Thickness: t=	
Status		Tolerance	Drawing no / Rev
Scale: 1:40	Format: A3	Sheet/Sheet: 1/2	Rev Part

SOLIDWORKS Educational Product. For Instructional Use Only.

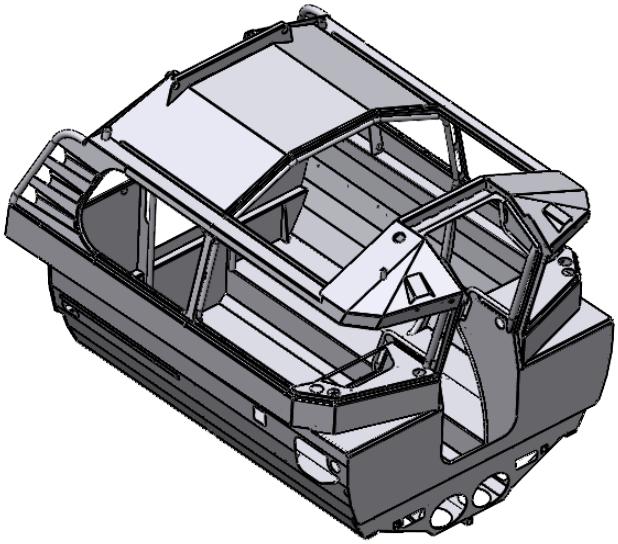

Pos nr	Antal	Titel/Benämning, beteckning
1	1	24 spc aktervägg (3.0)
2	1	24 spc förvägg (3.0)_1
3	1	24 spc aktervägg (3.0)_1
4	1	24 spc cabindurk (3.0) del1
5	1	24 spc förvägg (3.0)
6	1	24 spc cabinsida undre (2.0) del1
10	1	24 spc pulpet STB (3.0) del1
11	2	24 spc rörlist mid 2 (M-4.0)
12	1	Mirror24 spc cabinsida övre (M-3.0) del1
13	1	24 spc cabinsida akter 1 (M-3.0) del1
15	1	24 spc pulpetsida STB (3.0)_1
17	1	24 spc förvägg dörrkarm SB (4.0)
19	2	24 spc rörlist mid 1 (4.0) del2
22	1	24 spc pulpetsida STB (3.0)
23	2	24 spc förvägg dörrkarm BB (4.0) del 2
24	1	24 spc tak akter 2 (3.0) del1
25	1	24 spc tak för 2 (3.0)
27	1	24 spc tak för STB (3.0)
28	1	24 spc tak för 1 (3.0)
29	1	24 spc tak akter 1 (3.0)
30	1	24 spc tak sida (M-3.0)
32	2	24 spc cabinsida övre (M-3.0) del3
33	1	24 spc cabinsida undre 2 (M-3.0)
34	2	24 spc tak sida (M-3.0) del3
35	1	24 spc trapp för (3.0)
37	1	24 spc cabinsida akter 2
38	2	24 spc pulpet BB (3.0) del2
40	1	24 spc pulpet STB (3.0) del2
41	3	24 spc cabindurk balk
42	4	24 spc cabinknä (M-5.0) del3
44	2	24 spc cabinsida akter 1 (M-3.0) del2
45	2	24 spc cabinsida akter 1 (M-3.0) del3
46	2	24 spc cabinsida akter 1 (M-3.0) del4
47	2	24 spc cabinsida undre (2.0) del3
48	2	24 spc cabinsida undre (2.0) del4
49	2	24 spc cabinknä (M-5.0) del1
50	2	24 spc cabinknä (M-5.0) del2
52	2	24 spc aktervägg (3.0) del2
54	1	24 spc tak akter 2 (3.0) del2
55	1	24 spc tak för panellist (M-3.0)
56	2	24 spc tak sida (M-3.0) del2
57	1	Mirror24 spc rörlist akter (M-3.0)
60	1	24 spc rör del 2
63	1	24 spc rör del 3
64	1	24 spc rör del 1
65	1	24 spc cabinsida akter 1 (M-3.0) del5
67	2	Länskåpa
68	1	Part9^24 spc cabin

This document and its contents are the exclusive property of Arronet Smidesteknik AB and must not be copied, reproduced, transmitted or communicated to any other party or used for purposes not expressly permitted by us.

Arronet
Arronet Teknik AB
Varvsvägen 2
742 43 Öregrund
Telefon 0173-465 90
info@arronet.se

Designed by | Date
Drawn by: Martin Bevemyr | Date
Approved by | Date

Weight	Material	Thickness
Kg		t=

Status	Tolerance

Scale	Format	Sheet/Sheet	Rev Part
1:40	A4	2/2	

Title/Description

24SPC Cabin

Drawing no	Rev

SOLIDWORKS Educational Product. For Instructional Use Only.

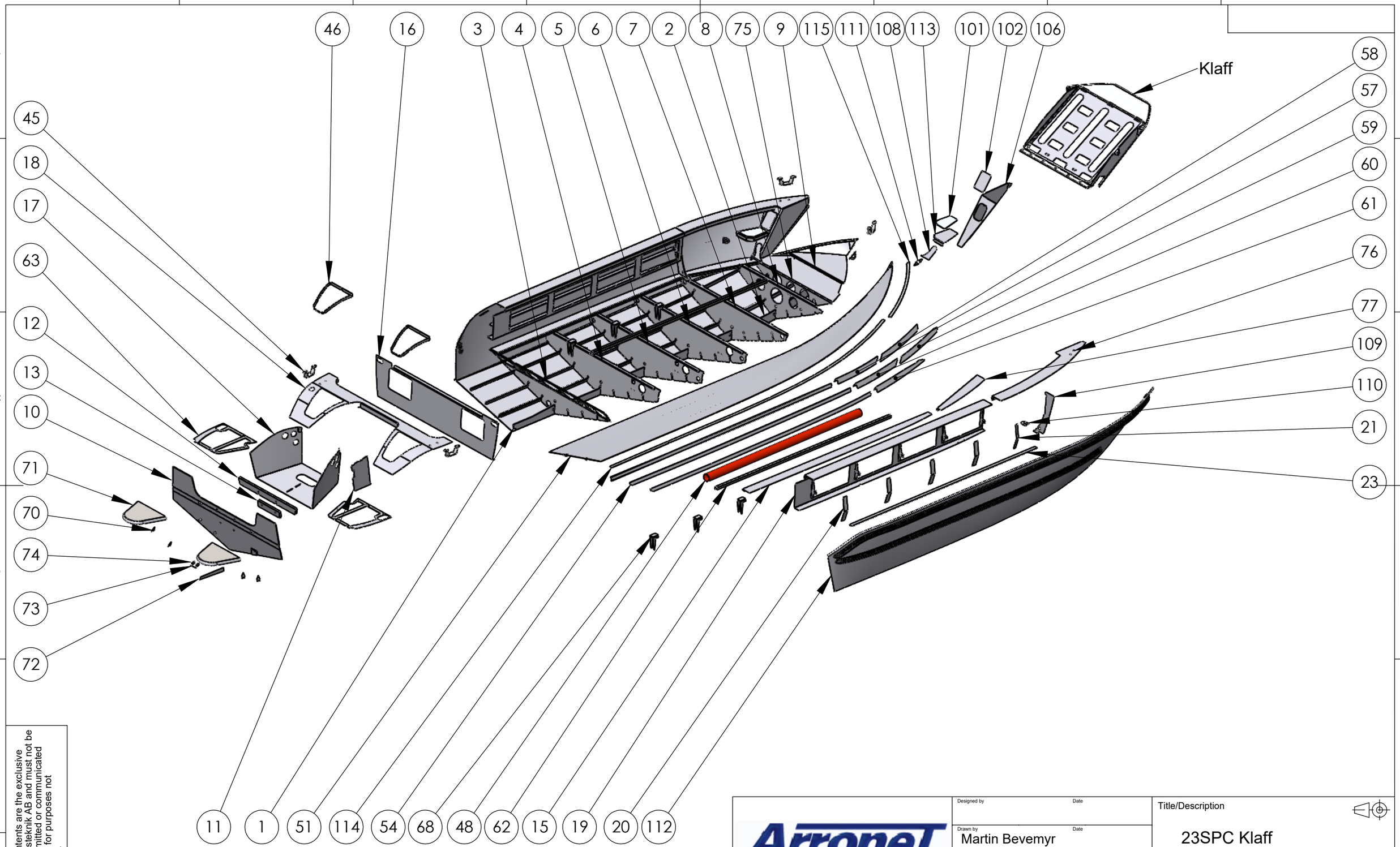

This document and its contents are the exclusive property of Arronet Smidesteknik AB and must not be copied, reproduced, transmitted or communicated to any other party or used for purposes not expressly permitted by us.

Arronet
Arronet Teknik AB
Varvsvägen 2
742 43 Öregrund
Telefon 0173-465 90
info@arronet.se

Designed by		Date	
Drawn by	Martin Bevemyr	Date	
Approved by		Date	
Weight	Kg	Material	Thickness t=
Status		Tolerance	
Scale 1:50	Format A3	Sheet/Sheet 1/2	Rev Part

Title/Description

23SPC Klaff

Drawing no	Rev

SOLIDWORKS Educational Product. For Instructional Use Only.

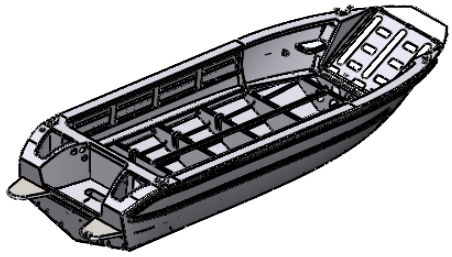

Pos nr	Antal	Titel/Benämning, beteckning
1	1	Köl akter 23 SP-C del 2
2	1	Köl för 23 SP-C
3	1	SPANT 7 23 SP-C
4	1	SPANT 6 23 SP-C
5	1	SPANT 5 23 SP-C
6	1	SPANT 4 23 SP-C
7	1	SPANT 3 23 SP-C
8	1	SPANT 2 23 SP-C
9	1	SPANT 1 23 SP-C
10	1	Akterspegel 20-23 del 1
11	1	Akterspegel 20-23 del 2
12	1	Akterspegel 20-23 del 3
13	1	Akterspegel 20-23 del 4
15	1	Durkupplag mid (M) 23 SP-C
16	1	Akterskott 20-23 2
17	1	Motorbrunn 20-23
18	1	Skarndäck akter 20-23
19	1	Skarndäck M bordslåda (M) 23 SP-C Del 1
20	4	skarndäck M bordslåda (M) 23 SP-C del 2
21	1	Skarndäck M bordslåda (M) 23 SP-C del 3
23	2	Skarndäck bordslåda spänbalk
45	3	knap 2015
46	1	Skarndäcklocka framkant 23 klaff
48	1	Rör
51	1	Botten plåt 23klaff
57	1	Stringer för 1 23 SP-C
58	1	Stringer för 2 23 SP-C
59	1	Stringer för 4 23 SP-C
60	1	Stringer för 3 23 SP-C
61	1	Stringer för 5 23 SP-C
62	1	Mirrorfyrkanst rör
63	1	MirrorDurkupplag akt.stuv 20-23 (5.0)
68	3	MirrorCC24024_23cc knä del 2
70	4	Trimplan (små delarna)
71	2	24,5 cx (ub) Badbrygga
72	2	Trimplan (små delarna) del 1
73	2	badstege förtärkning 2020 del 2
74	4	badstege förtärkning 2020 del 3
75	1	23 Klaff 2018_1
76	2	23 Klaff 2018_28
77	1	23 Klaff 2018 skarndäck för
101	2	23 Klaff 2018_30
102	2	23 Klaff 2018_26
106	1	23 Klaff 2018_2
108	2	23 Klaff 2018_25
109	2	23 Klaff 2018_23
110	2	23 Klaff 2018_24
111	2	Lastögla 1
112	1	Bordsida 23klaff
113	1	Mirror23 Klaff 2018_29
114	1	Slag akter 23 Klaff 2018
115	1	Slag för 23 Klaff 2018

This document and its contents are the exclusive property of Arronet Smidesteknik AB and must not be copied, reproduced, transmitted or communicated to any other party or used for purposes not expressly permitted by us.

Arronet

Arronet
Arronet Teknik AB
Varvsvägen 2
742 43 Öregrund
Telefon 0173-465 90
info@arronet.se

Designed by		Date	
Drawn by	Martin Bevemyr	Date	
Approved by		Date	
Weight	Kg	Material	Thickness t=
Status		Tolerance	
Scale 1:100	Format A4	Sheet/Sheet 2/2	Rev Part

Title/Description

23SPC Klaff

Drawing no	Rev

SOLIDWORKS Educational Product. For Instructional Use Only.

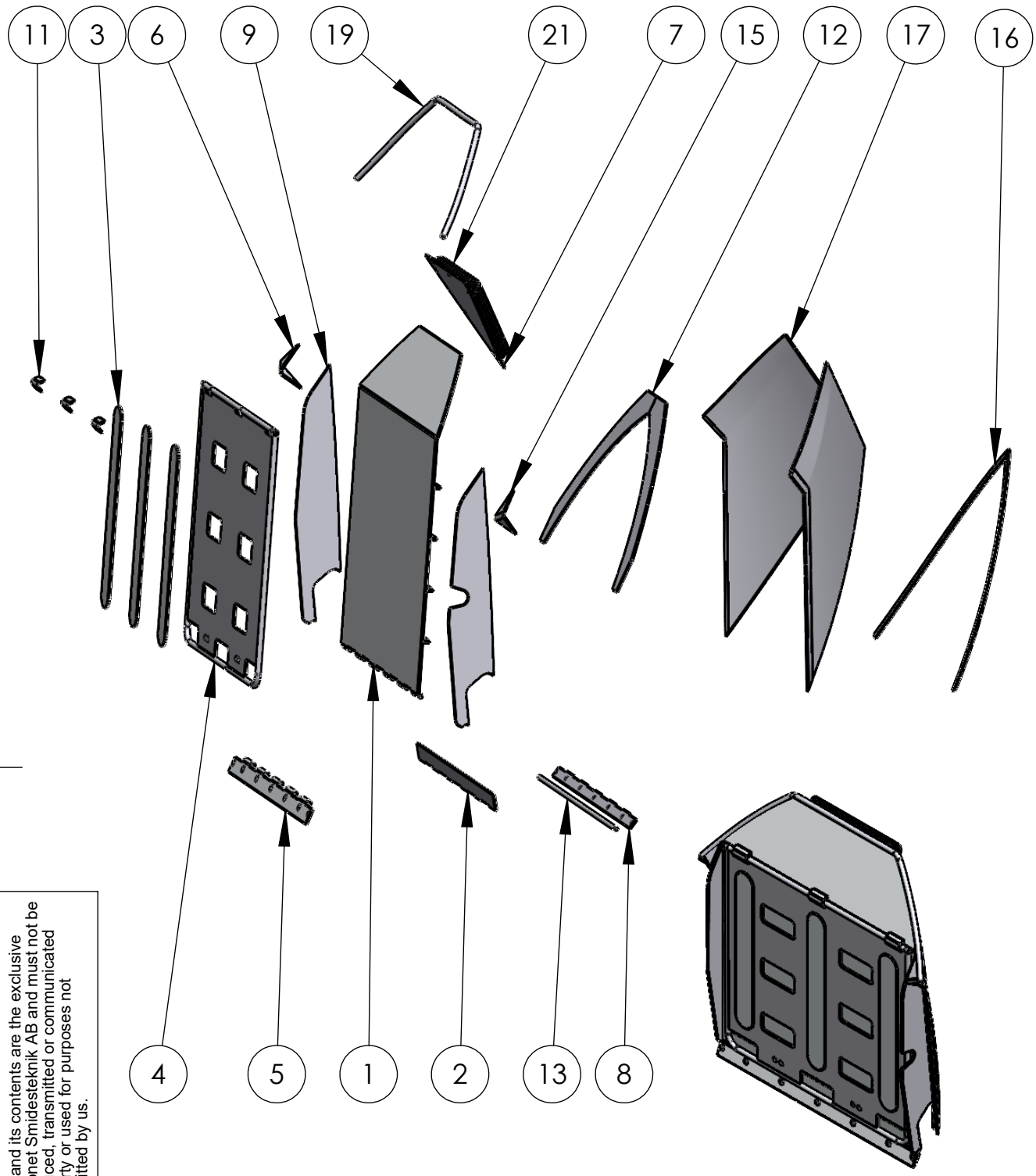

This document and its contents are the exclusive property of Arronet Smidesteknik AB and must not be copied, reproduced, transmitted or communicated to any other party or used for purposes not expressly permitted by us.

Designed by	Date		Title/Description
Drawn by: Martin Bevemyr	Date		23Klaff
Approved by	Date		
Weight: Kg	Material	Thickness: t=	
Status		Tolerance	Drawing no / Rev
Scale: 1:20	Format: A4	Sheet/Sheet: 1/2	Rev Part

Arronet
Arronet Teknik AB
Varvsvägen 2
742 43 Öregrund
Telefon 0173-465 90
info@arronet.se

SOLIDWORKS Educational Product. For Instructional Use Only.

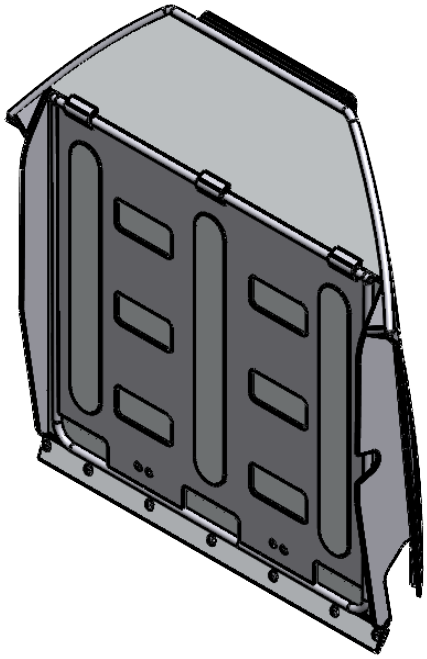

Pos nr	Antal	Titel/Benämning, beteckning
1	1	23 Klaff 2018_7
2	1	23 Klaff 2018_12.5
3	3	23 Klaff 2018_15
4	1	23 Klaff 2018_16
5	1	23 Klaff 2018_8
6	1	23 Klaff 2018_3
7	1	23 Klaff 2018_5
8	1	23 Klaff 2018_12 ny
9	1	23 Klaff 2018_10
11	3	23 Klaff fäste
12	1	23 Klaff 2018_31
13	1	rör 20x3 klaff
16	1	Slag klaff
17	1	Bordsida klaff
19	1	Bordslist klaff

This document and its contents are the exclusive property of Arronet Smidesteknik AB and must not be copied, reproduced, transmitted or communicated to any other party or used for purposes not expressly permitted by us.

Designed by | Date

Drawn by: Martin Bevemyr | Date

Approved by | Date

Weight: Kg | Material | Thickness: t=

Status | Tolerance

Scale: 1:20 | Format: A4 | Sheet/Sheet: 2/2 | Rev Part

Title/Description: 23Klaff

Drawing no | Rev

Arronet
Arronet Teknik AB
Varvsvägen 2
742 43 Öregrund
Telefon 0173-465 90
info@arronet.se

SOLIDWORKS Educational Product. For Instructional Use Only.

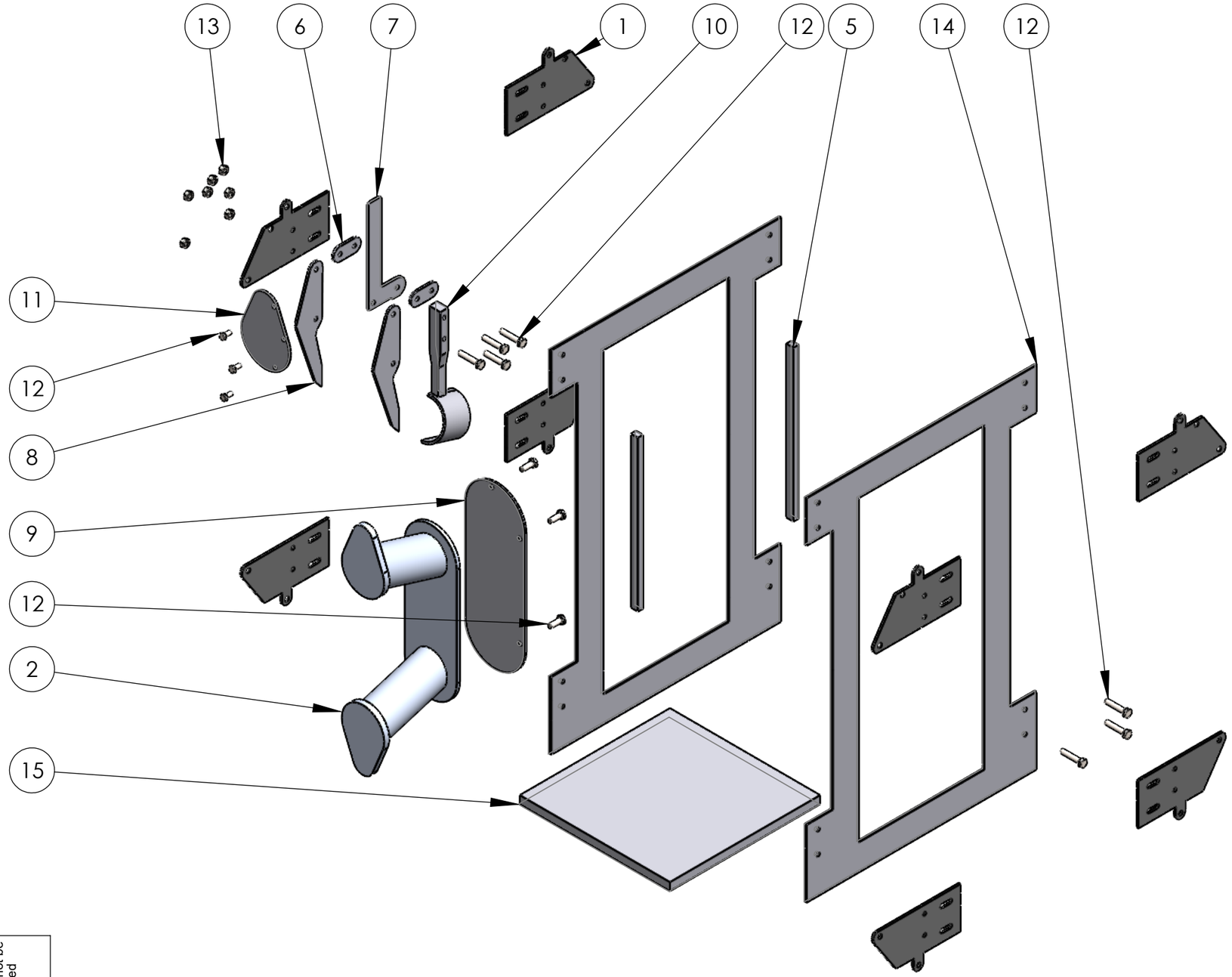

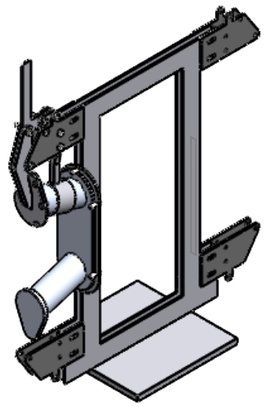

Pos nr	Antal	Titel/Benämning, beteckning
1	2	fäste
2	1	Knap 50 2021
5	2	Margin balk Knap mall 2021
6	2	fast arm
7	1	handtags arm
8	2	spänn arm
9	1	Botten fäste Knap mall 2021
10	1	Rör fäste Knap mall 2021
11	1	Top fäste Knap mall 2021
12	13	ISO 4017 - M6 x 30-N
13	7	ISO - 4032 - M6 - W - N
14	2	Ram Knap mall 2021
15	1	Bas Platta Knap mall 2021

This document and its contents are the exclusive property of Arronet Smidesteknik AB and must not be copied, reproduced, transmitted or communicated to any other party or used for purposes not expressly permitted by us.

Arronet
Arronet Teknik AB
Varvsvägen 2
742 43 Öregrund
Telefon 0173-465 90
info@arronet.se

Designed by | Date
Drawn by: Martin Bevemyr | Date
Approved by | Date

Weight	Material	Thickness
Kg		t=

Status	Tolerance

Scale	Format	Sheet/Sheet	Rev Part
1:5	A3	1/1	

Title/Description
Knap 50 fäste

Drawing no	Rev

SOLIDWORKS Educational Product. For Instructional Use Only.