Example for ASM Project

Digital_Lock_ Between RFID-RC522 with ServoMotor

link : https://randomnerdtutorials.com/security-access-using-mfrc522-rfid-reader-with-arduino/

Sketch Code of C / C++

```
#include <SPI.h>
#include <MFRC522.h>
#include <Servo.h>


#define SS_PIN 10
#define RST_PIN 9
MFRC522 mfrc522(SS_PIN, RST_PIN);   // Create MFRC522 instance.

Servo servoMotor;
int pos = 0;
void setup()
{
  Serial.begin(9600);   // Initiate a serial communication
  SPI.begin();      // Initiate  SPI bus
  mfrc522.PCD_Init();   // Initiate MFRC522
  Serial.println("Approximate your card to the reader...");
  Serial.println();
  servoMotor.attach(8);
  servoMotor.write(pos);

}
void loop()
{
  // Look for new cards
```

```
  if (!mfrc522.PICC_IsNewCardPresent())
  {
    return;
  }
  // Select one of the cards
  if (!mfrc522.PICC_ReadCardSerial())
  {
    return;
  }
  //Show UID on serial monitor
  Serial.print("UID tag :");
  String content = "";
  byte letter;
  for (byte i = 0; i < mfrc522.uid.size; i++)
  {
    Serial.print(mfrc522.uid.uidByte[i] < 0x10 ? " 0" : " ");
    Serial.print(mfrc522.uid.uidByte[i], HEX);
    content.concat(String(mfrc522.uid.uidByte[i] < 0x10 ? " 0" : " "));
    content.concat(String(mfrc522.uid.uidByte[i], HEX));
  }
  Serial.println();
  Serial.print("Message : ");
  content.toUpperCase();
  if (content.substring(1) == "89 36 2E 5A") //change here the UID of the card/cards that you want to giv
e access
  {
    Serial.println("Authorized access");
    Serial.println();
    delay(400);
    //Unlock by servo
    for (pos = 0; pos <= 90; pos += 11)
    {
      servoMotor.write(pos);
      delay(30);
    }
    delay(6000);
    for (pos = 90; pos >= 0; pos -= 11)
    {
      servoMotor.write(pos);
      delay(30);
    }
```

```
  }
  else
  {
    return pos;
  }
}
```

Component

	circuit	Name	Quality	Cost
		NodeMCU ESP8266	1 unit	
	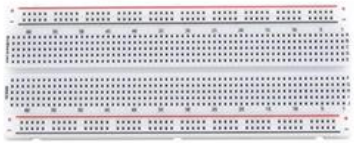	breadboard	1 unit	
		Magnetic Reed Switch	1 unit	
		Jumper Wire	1 set of 30 unit	

		Jumper M-F (EDM-002-A)	1 set	
		RFID RFC522	1 set and 2 ID card	
		Servo motor	1	

Component Circuit for Building	Circuit connects with	Node MCP ESP8266
ESP8266 size CH22 (Node MCP)	Install in board	Main Core of Circuit • Ardoino > Tool • Borad (NodeMCP) • Port (CM6)

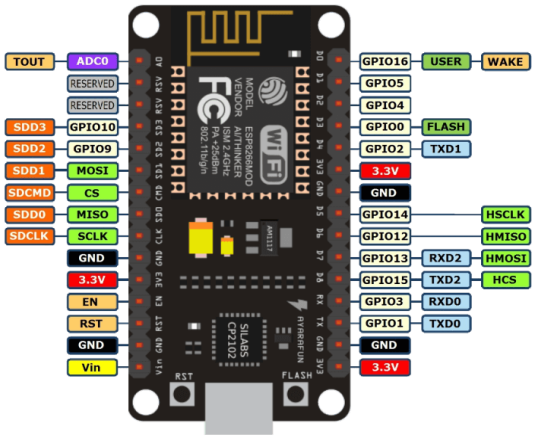		
RFID RFC522 With Card Tag or MFRC522 	SDA SCK MOST MISO GND RST 3.3V	Pin D4 Pin D5 Pin D7 Pin D6 GND Pin D3 3.3V
Servo Motor 	Red wire Yellow wire Black wire	3.3V Pin D8 GND
Led Red and White. (“+” for short leg and “-” for long leg) 	Red leg (+) Short Leg White led (+) Short Leg Both Led (-) long Leg	Pin D0 Pin D1 GND

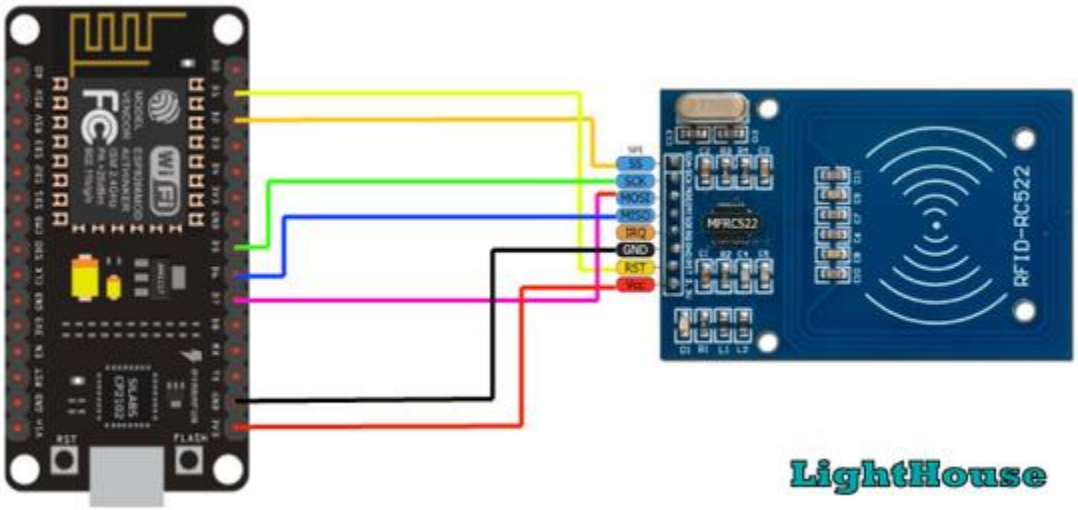

LightHouse

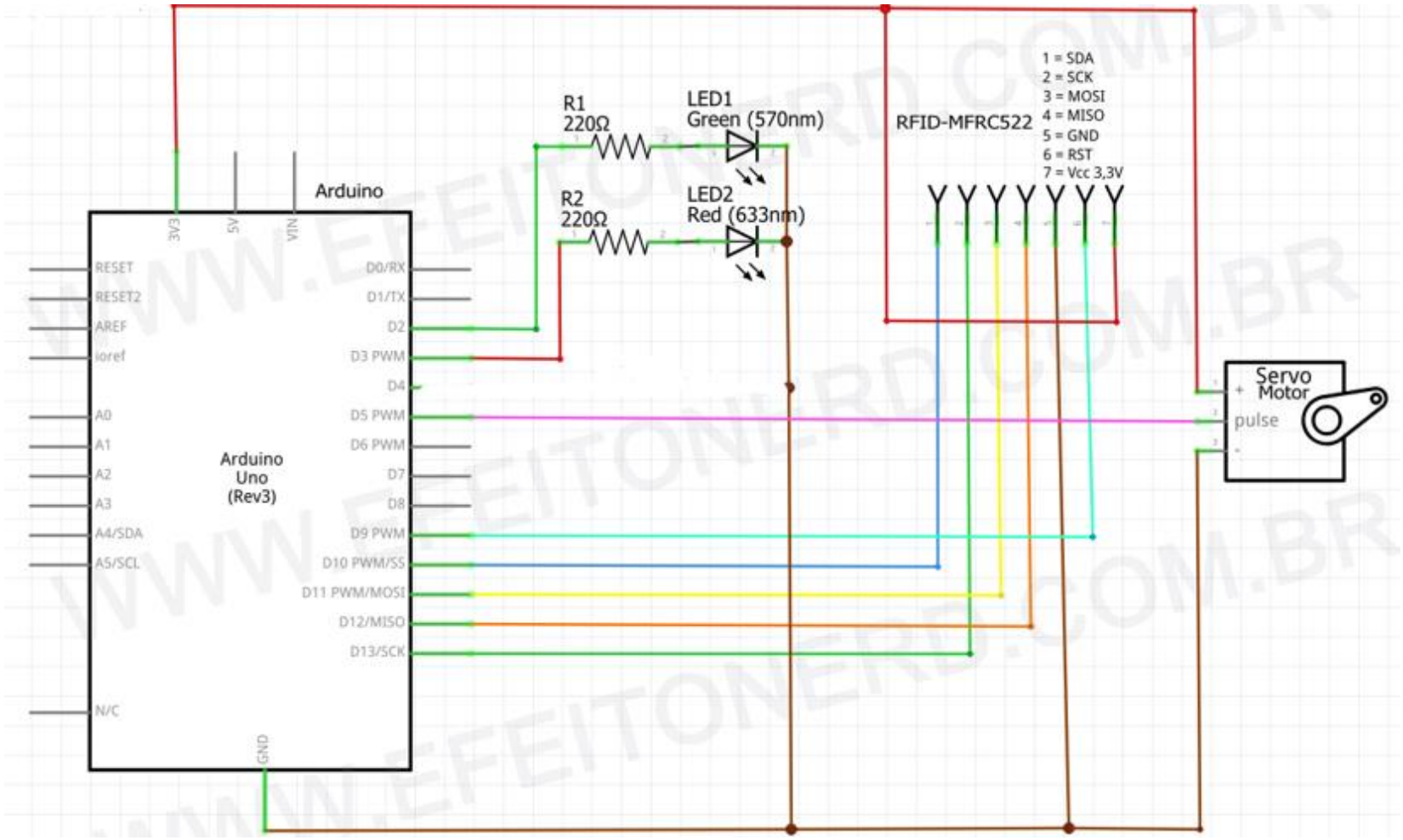

http://www.efeitonerd.com.br/2017/11/controle-de-acesso-com-rfid-e-eeprom.html

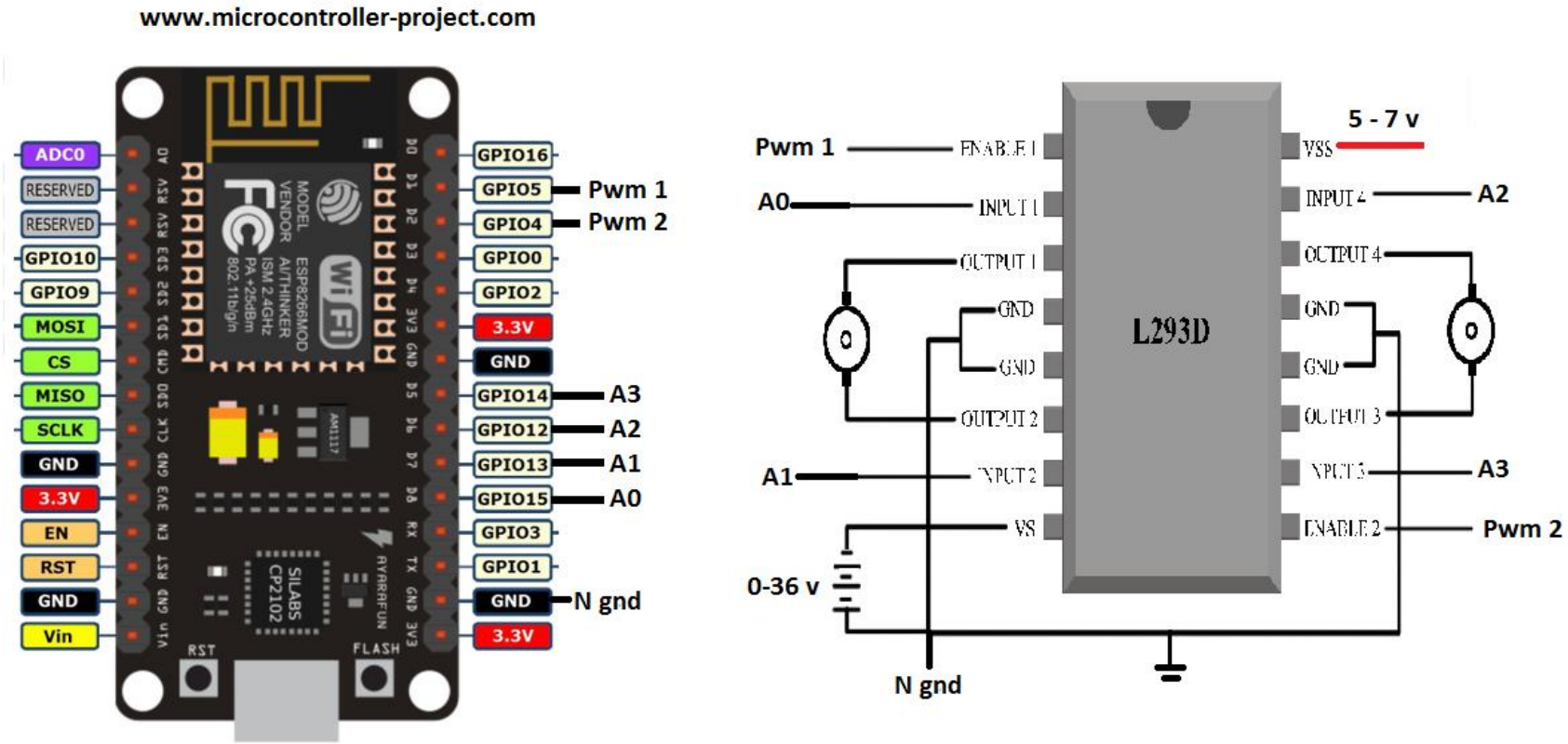

Example on

Link: Application of RFID Technology for Logistics on Internet of Things (Search on google)

consumer wants to identify the authenticity of the product.

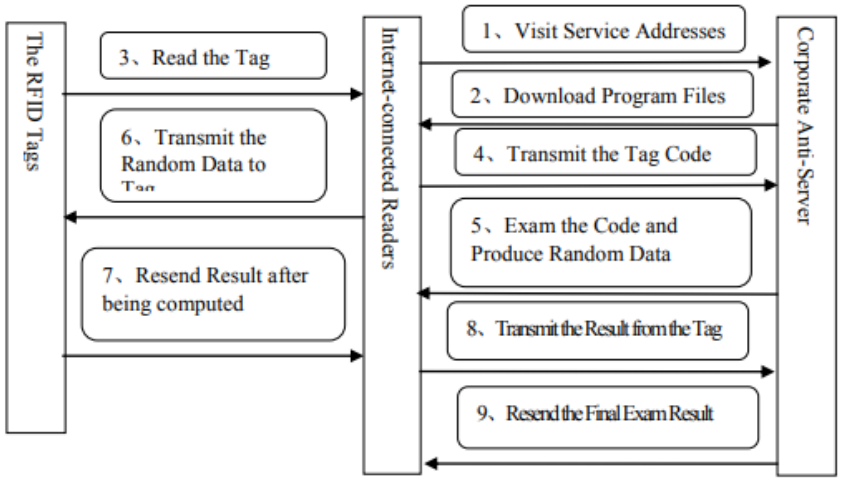

Fig 3 The process of anti-counterfeiting for products

IOT Architecture of door-lock with smart-App

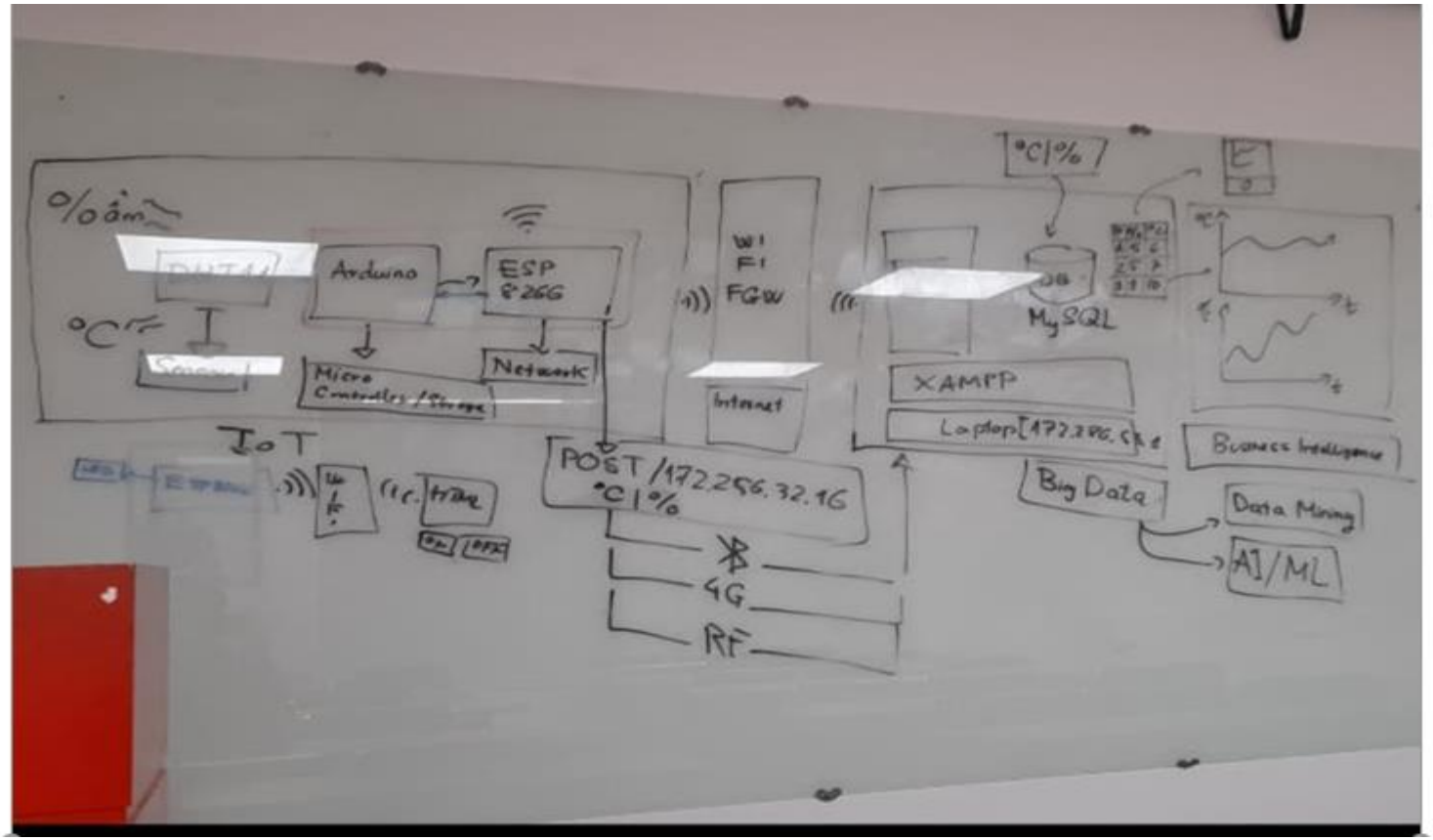

%ẩm
°C
Arduino
ESP 8266
Micro Controller / Storage
Network
IoT
WI FI FGW
Internet
POST /172.256.32.16
°C | %
4G
RF
°C | %
MySQL
XAMPP
Laptop[172.286.5
Big Data
Data Mining
AI/ML
Business Intelligence

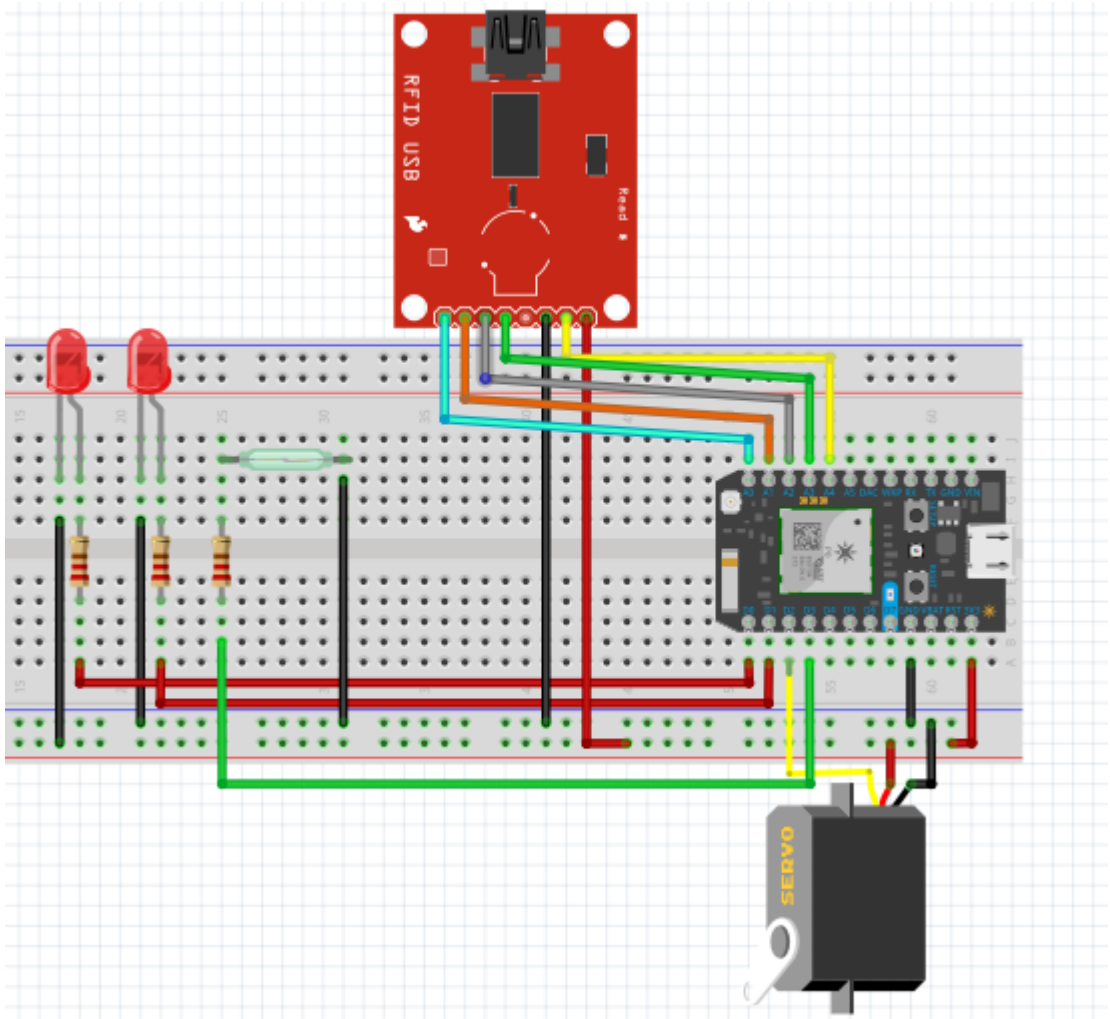
RFID USB
Read
SERVO

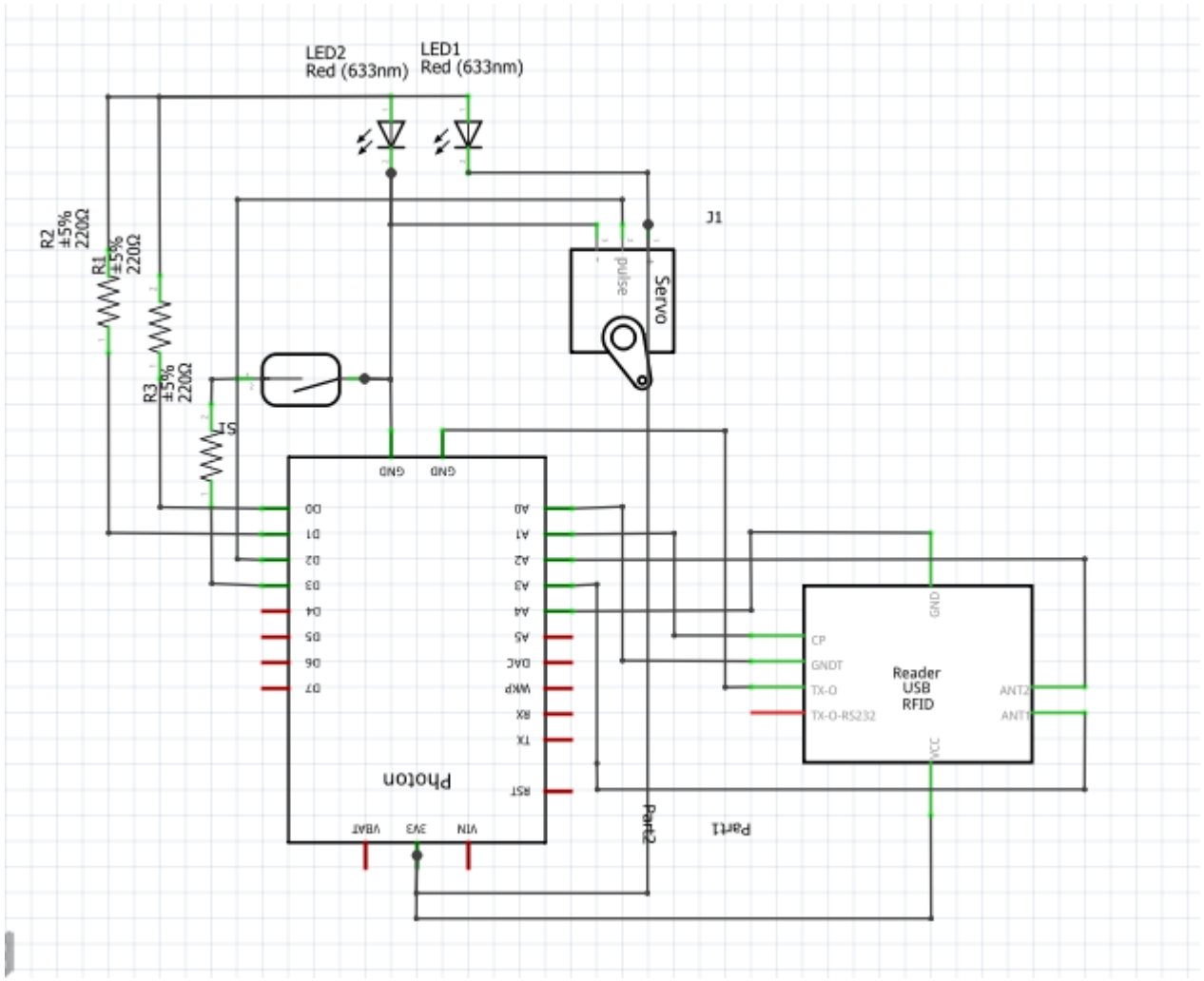


```
# include <SPI.h>
# include <MFRC522.h>
# include <Servo.h>
# include <ESP8266WiFi.h>
# include <BlynkSimpleEsp8266.h>


//Declare SS and RST pin on RFID
#define SS_PIN D4
```

```
#define RST_PIN D3
MFRC522 mfrc522(SS_PIN, RST_PIN);   // Create MFRC522 instance.

//declare blynk
#define BLYNK_PRINT Serial
//declare blynk's LCD in App
WidgetLCD lcd(V10);// Create Blynk LCD intance.

// should get Auth Token in the Blynk App.
char auth[] = "KwkQ9d_VOzaqAoL3M2_NZu1mWOgSqwAK";
// Your WiFi credentials.
// Set password to Wifi networks.
char ssid[] = "Greenwich-Student";
char pass[] = "12345678";

// value Pin with Led
int red = D0;
int white = D1;

// declare Servo
Servo servoMotor;
int pos = 0;// decare setup value position of Servo motor with 0"

//declare switch Sensor
const int SwitchSensor = D2;
int state;
bool isOpen = false;


void setup()
{
  Serial.begin(9600);   // Initiate a serial communication
  Blynk.begin(auth, ssid, pass);
  pinMode(red, OUTPUT);// Led D0
  pinMode(white, OUTPUT); // Led D1
  pinMode(SwitchSensor, INPUT_PULLUP);// switch sensor D2
  SPI.begin();      // Initiate  SPI bus
  mfrc522.PCD_Init();   // Initiate MFRC522
  Serial.println("Approximate your card to the reader...");
  Serial.println();
  servoMotor.attach(D8);//Initiate servo PIn
```

```
  servoMotor.write(pos);//Initiate Servo original position
}

void turn_on(int led, int TIME)//funtion turn on The LED
{
  digitalWrite(led, HIGH);   // light reb (send 5V to the pin)
  delay(TIME);               // as wait 4000ms = 4s
  digitalWrite(led, LOW);
}


// Add funtion Door_open
void Door_open()
{
  for (pos = 0; pos <= 90; pos += 11)
  {
    servoMotor.write(pos);
    delay(30);
  }
  Serial.print("Open Door");
  Serial.println("");
  turn_on(white, 200);
}
//
// Add Funtion Door_close
void Door_close()
{
  for (pos = 90; pos >= 0; pos -= 11)
  {
    servoMotor.write(pos);
    delay(30);
  }
  Serial.print("Close Door");
  Serial.println("");
  turn_on(red, 200);
}
//

//Function switch remote on Blynh App's Button
BLYNK_WRITE(V1)
{
```

```
  int pinValue = param.asInt();

  if (pinValue == 1)
  {
    Serial.print("Open");
    Serial.println("");
    lcd.print(1, 0, "OPEN");// LCD print, column 1, row 1 in Blynk LCD
    Door_open(); //use function on remote
  }
  else
  {
    Serial.println("Close");
    Serial.println("");
    lcd.print(1, 0, "CLOSE"); // LCD print, column 1, row 1 in Blynk LCD
    Door_close();//use function on remote
  }
}

//Read Door state on switch sensor
void doorState()
{
  state = digitalRead(SwitchSensor);
  if (state == HIGH)
  {
    if (!isOpen)
    {
      Serial.println("Open");
      Serial.println(" ; ");
      lcd.print(1, 0, "Open");
      isOpen = true;
    }
  }
  else
  {
    if (isOpen)
    {
      Serial.println("Close");
      Serial.println(" ; ");
      lcd.print(1, 0, "Close");
      isOpen = false;
      Door_close();
```

```
    }
  }
  delay(1000);
}


void RFID()
{
  // Look for new cards
  if (!mfrc522.PICC_IsNewCardPresent())
  {
    return;
  }
  // Select one of the cards
  if (!mfrc522.PICC_ReadCardSerial())
  {
    return;
  }
  //Show UID on serial monitor
  Serial.print("UID tag :");
  String content = "";
  byte letter;
  for (byte i = 0; i < mfrc522.uid.size; i++)
  {
    Serial.print(mfrc522.uid.uidByte[i] < 0x10 ? " 0" : " ");
    Serial.print(mfrc522.uid.uidByte[i], HEX);
    content.concat(String(mfrc522.uid.uidByte[i] < 0x10 ? " 0" : " "));
    content.concat(String(mfrc522.uid.uidByte[i], HEX));
  }
  Serial.println();
  Serial.print("Message : ");
  content.toUpperCase();
  lcd.print(1, 0, content.substring(1));
  //delay(3000);// if put delay here, will delay Unlock trigger before 3s
  //lcd.clear();
  if (content.substring(1) == "59 1E 4B B2") //change here the UID of the card/cards that you want to giv
e access
  {
    Serial.println("Authorized access");
    lcd.print(2, 1, "Access");
    turn_on(white, 600);
```

```
    Serial.println();
    delay(400);
    //Unlock by servo
    Door_open();
  }
  else
  {
    Serial.println("not owener");
    lcd.print(2, 1, "Welcome Robber");
    turn_on(red, 400);
    servoMotor.write(pos);
  }
  delay(3000);// will dalay clear function Disply in Blynk LCD after 3s
  lcd.clear();
}

void loop()
{
  Blynk.run();
  RFID();
  doorState();
}
```