DRG.No.	F01094	FRAME SIZE:A3	DO NOT SCALE

REV	DETAILS	ECN No.	DATE	DRN	CHK
A	FIRST ISSUE.	PH09_140	06 Jan 09	TT	GC
B	MATERIAL SPECIFICATION CHANGED TO DELETE THE M PRE-FIX.	PH09_140	23 Feb 09	TT	MH

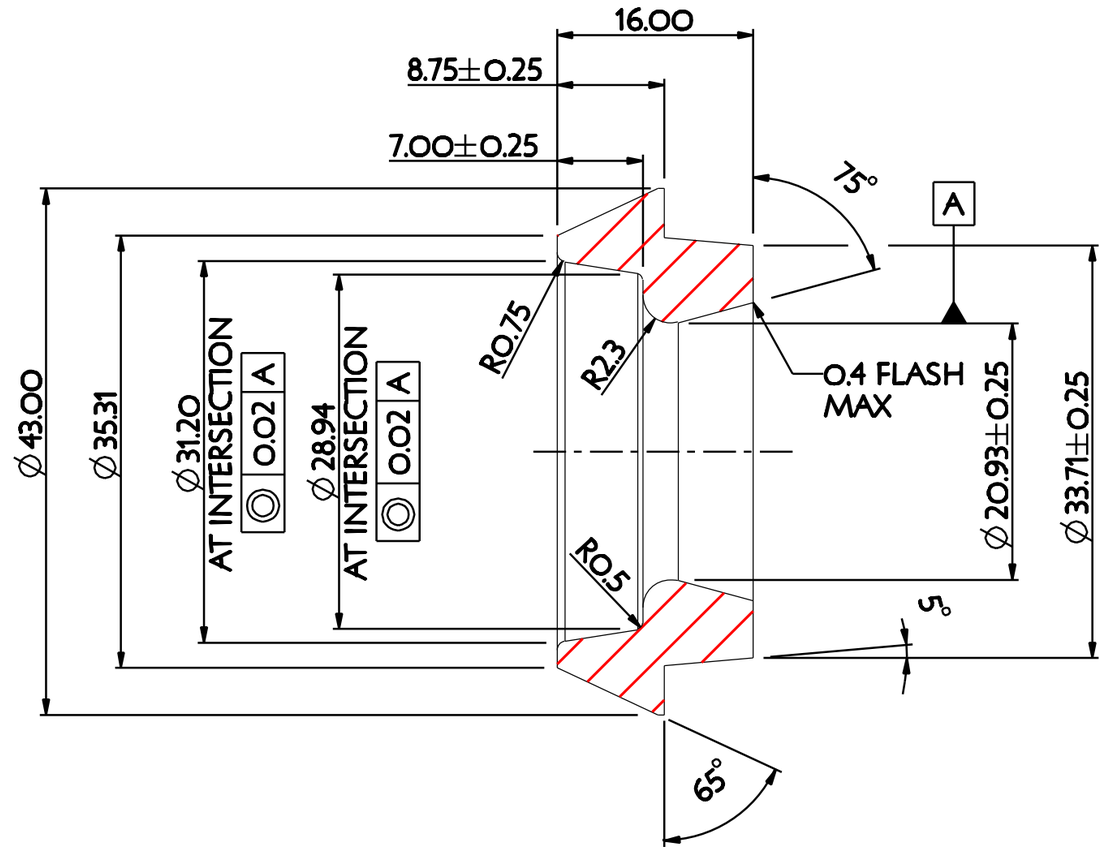

SECTION A - A

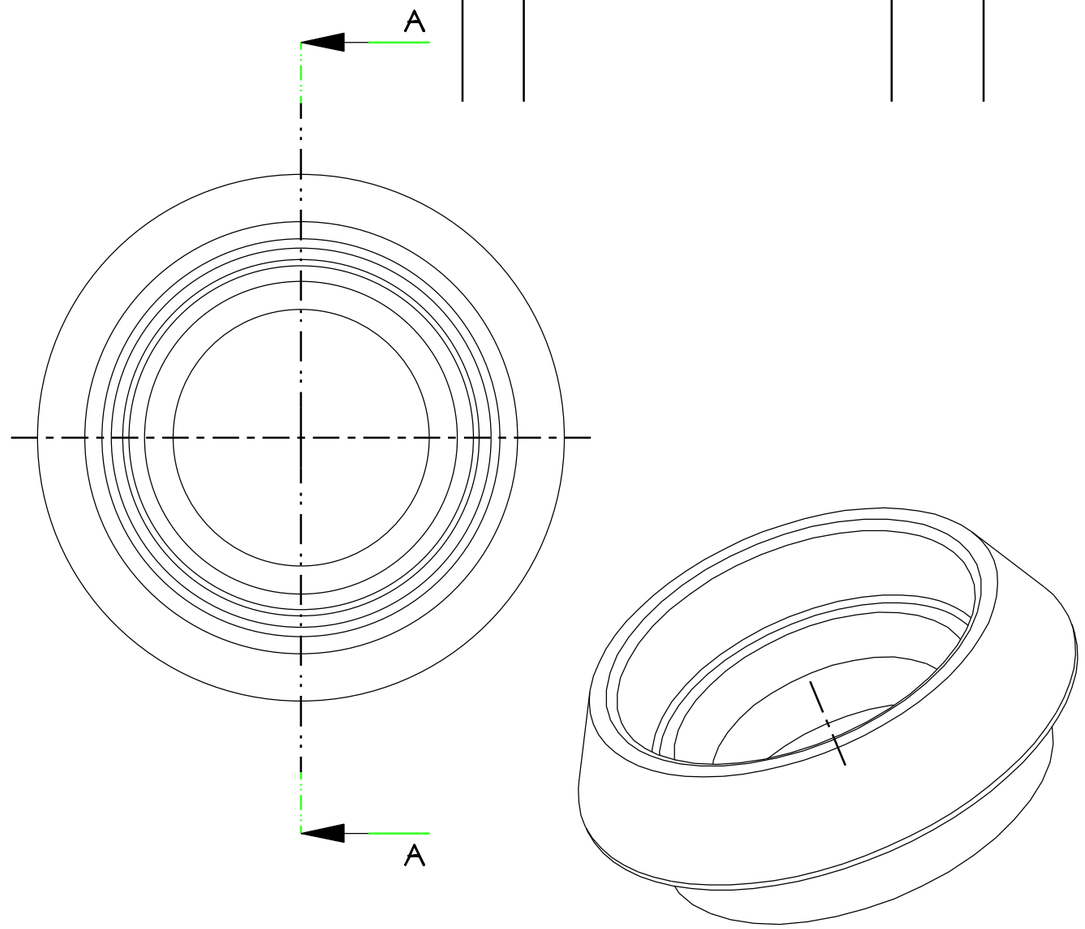

NOTES:
SIMILAR TO PART NUMBER F22644.
CONSULT THIS PART BEFORE
MAKING ANY REVISIONS.

NOMINAL VALUE	µm	0.1	0.2	0.4	0.8	1.6	3.2	6.3	12.5
	µ	4	8	16	32	63	125	250	500
ROUGHNESS No.		N3	N4	N5	N6	N7	N8	N9	N10

OLD PART NUMBER WAS: F22644

PROJECT CODE: .

MATERIAL: (B) NITRILE RUBBER ASTM D2000 5BG 515 A14 B14 E014 E034 F15

FINISH: COLOUR - BLACK HARDNESS 50 ±5 DUROMETER .

RACOR® FILTER DIVISION EUROPE

TITLE: LIP SEAL HEAVY DUTY

THIS DOCUMENT CONTAINS PROPRIETARY INFORMATION AND IS SUBMITTED IN CONFIDENCE AND SUBJECT TO RETURN UPON REQUEST AND UPON THE CONDITION THAT THE INFORMATION CONTAINED HEREIN WILL NOT BE USED IN ANYWAY DETRIMENTAL TO THE INTEREST OF PARKER HANNIFIN PLC.

DRAWN	TT	DATE	06 Jan 09	DRG. No.	F01094		
CHKD	GC	DATE	21 Jan 09				
APVD	PC	DATE	21 Jan 09				
SCALE	2:1	FRAME SIZE:A3		SHT.No.	1 of 1	REVISION	B

Parker Filtration
PARKER HANNIFIN PLC
FILTER DIVISION
CHURWELL VALE
SHAW CROSS BUSINESS PARK
DEWSBURY
WEST YORKSHIRE
WF12 7RD
TEL: +44 (0) 1924 487000
FAX: +44 (0) 1924 487001

FIRST ANGLE PROJECTION

REVISE ONLY ON PRO/E SYSTEM

UNLESS OTHERWISE STATED:
ALL DIMENSIONS ARE IN MILLIMETRES
TOLERANCE ON ALL LINEAR DIMENSIONS ±0.2
TOLERANCE ON ALL ANGULAR DIMENSIONS ±1°
REMOVE ALL BURRS AND SHARP CORNERS
SURFACE FINISH 1.6