PARTS LIST		
ITEM	QTY	PART NUMBER
1	1	Conveyor Brace

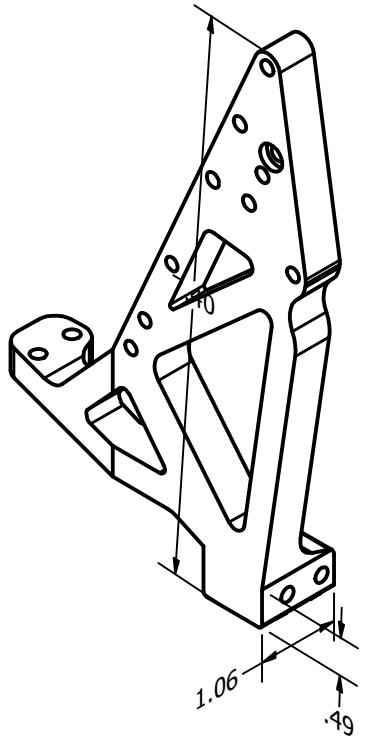

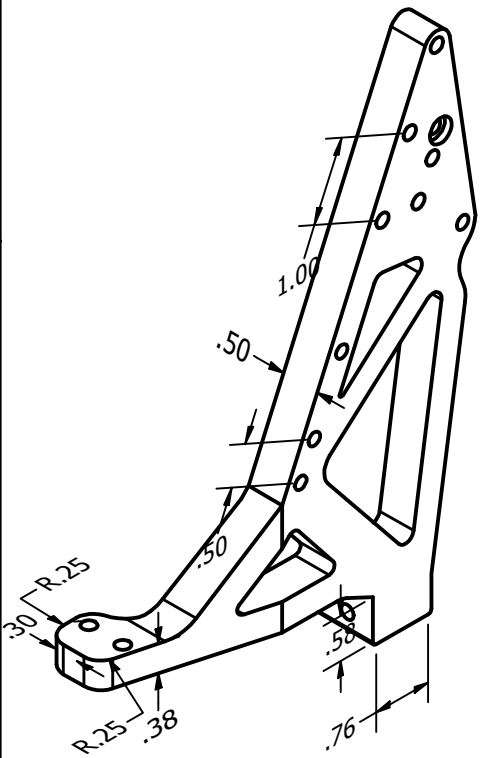

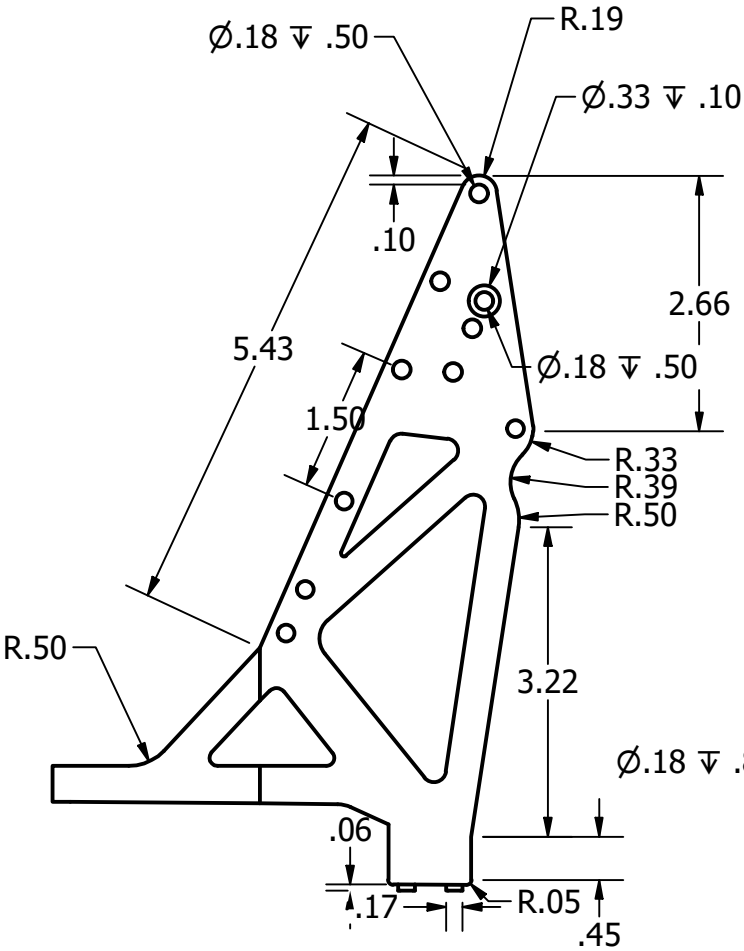

DRAWN AtuStem	1/10/2025			
CHECKED		TITLE		
QA				
MFG				
APPROVED				
		SIZE A	DWG NO LadyBrown_Brace_Drawing	REV
		SCALE 1/2		SHEET 1 OF 1