بسم الله الرحمن الرحيم

Ultrasonic Sensor Programming with Arduino

By

Prof.Dr. Eng. Tamer Medhat
tmedhatm@eng.kfs.edu.eg
www.kfs.edu.eg/drtamer.html

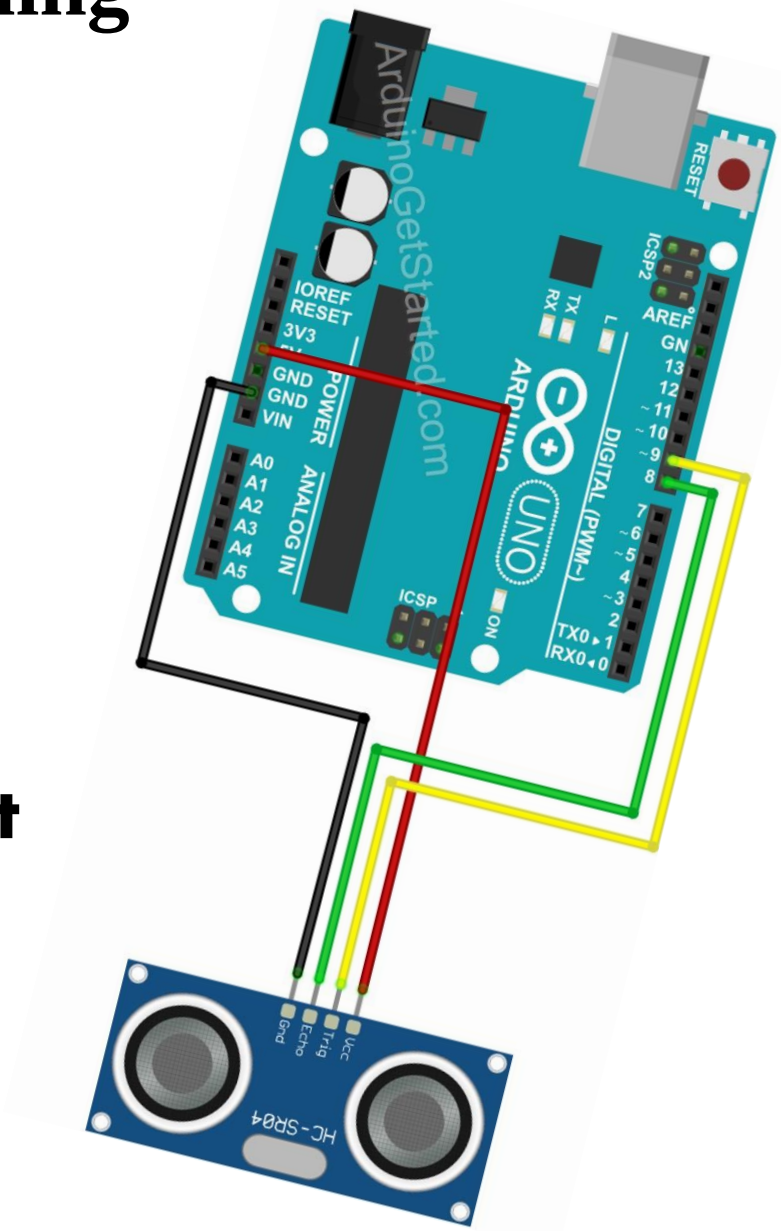

0.3 CM
RESOLUTION

<15'
ANGLE

<2MA
CURRENT

2-450CM
DETECTION RANGE

1. VCC
2. TRIG
3. ECHO
4. GND

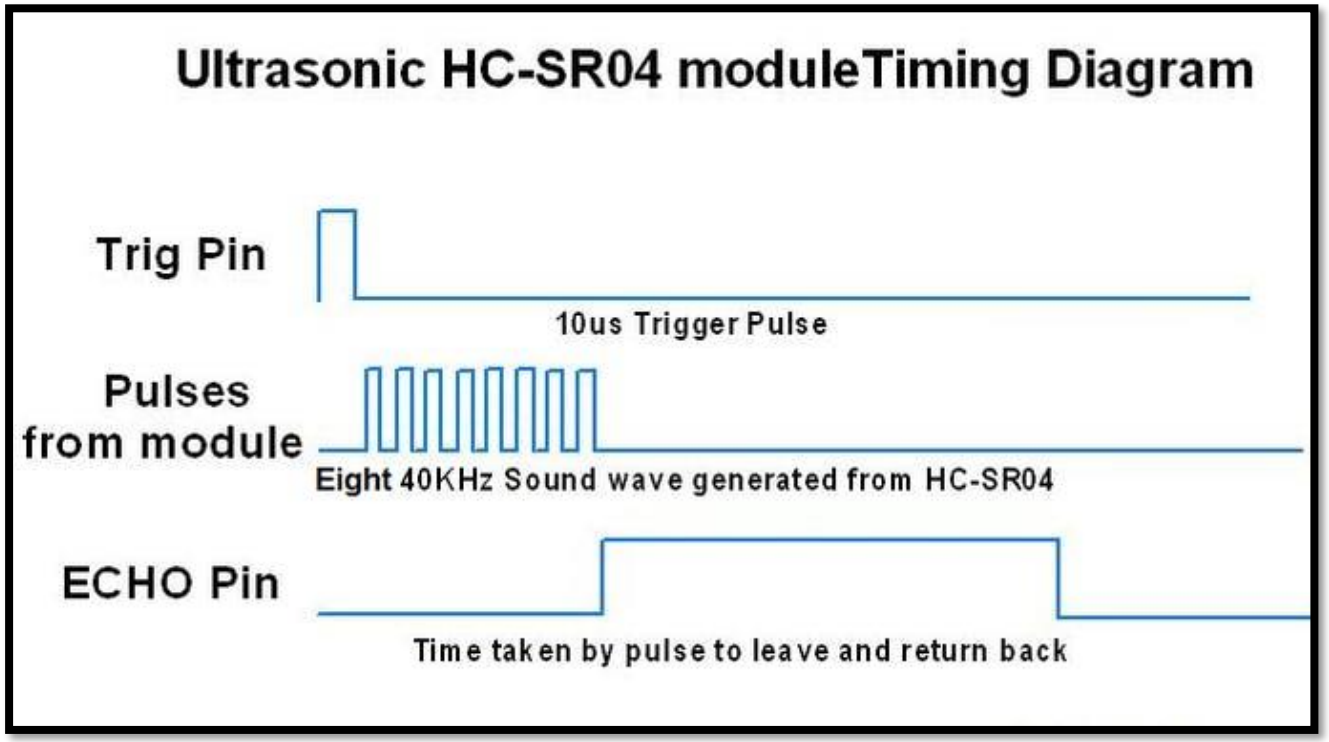

For **example**, if the object is **20** cm away from the sensor, and the **speed of the sound** is **340 m/s** or **0.034 cm/µs** the sound wave will need to travel about **588 microseconds**. But what you will get from the Echo pin will be **double** that number because the sound wave needs to travel forward and bounce backward. **So in order to get the distance in cm we need to multiply the received travel time value from the echo pin by 0.034 and divide it by 2**.

How does Ultrasonic Sensor?

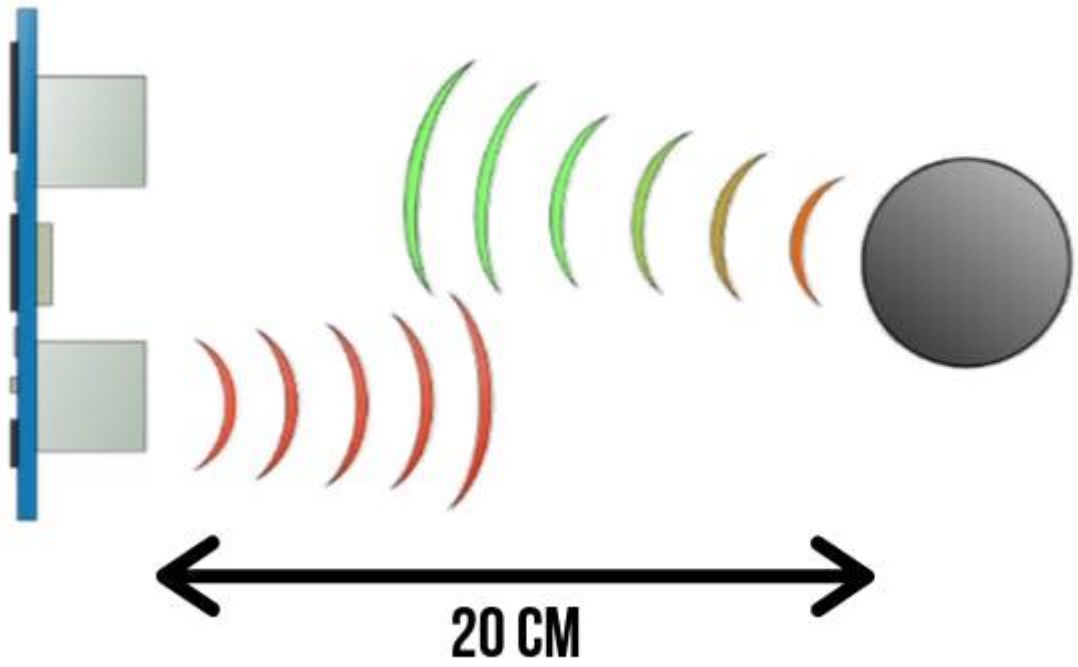

SPEED OF SOUND:

v = 340 m/s

v = 0.034 cm/µs

TIME = DISTANCE/SPEED

t = s/v = 20/0.034

= 588 us

s = t x 0.034/2

Components for Testing Ultrasonic Sensor

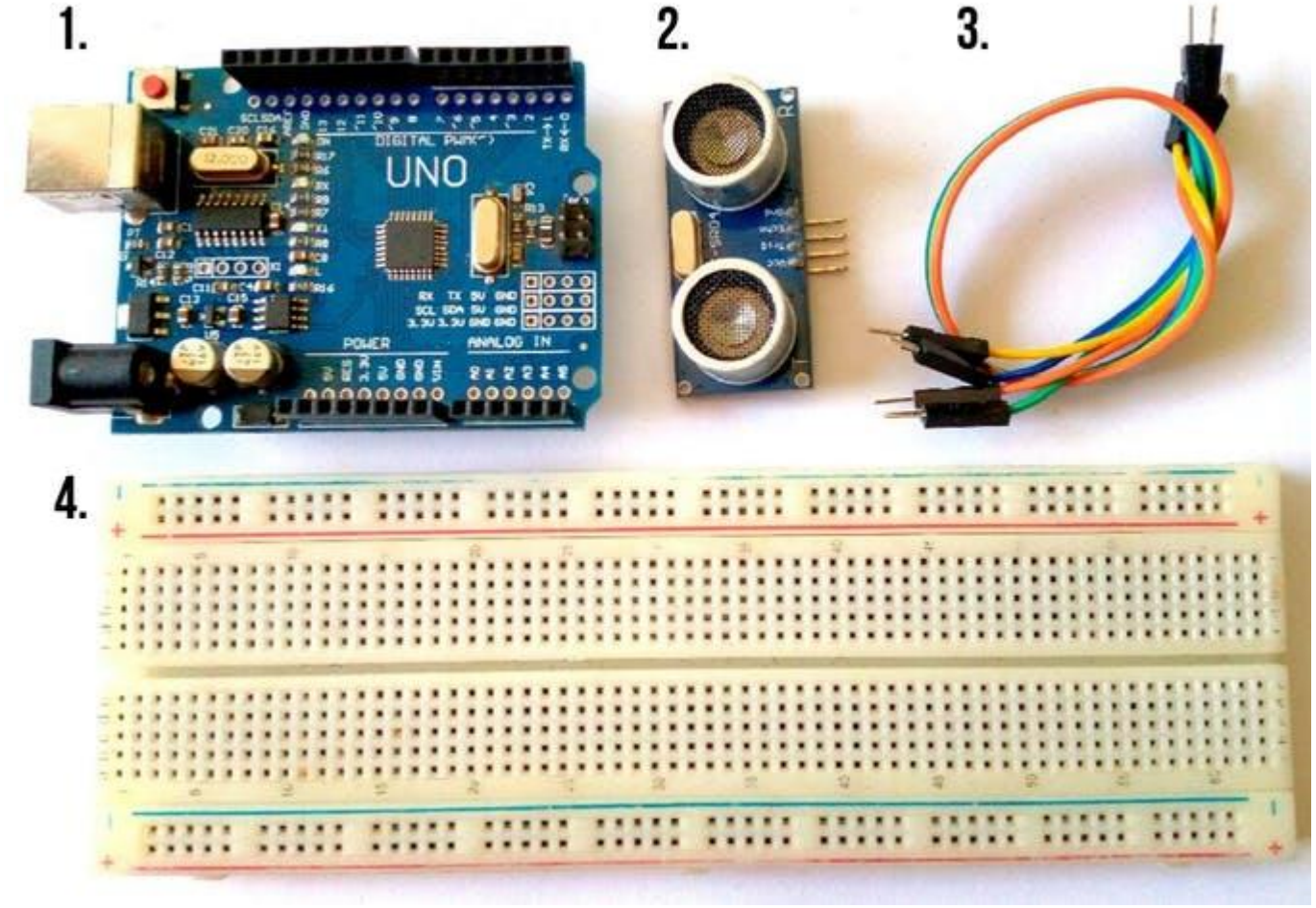

Ultrasonic Sensor with Arduino And Serial Monitor

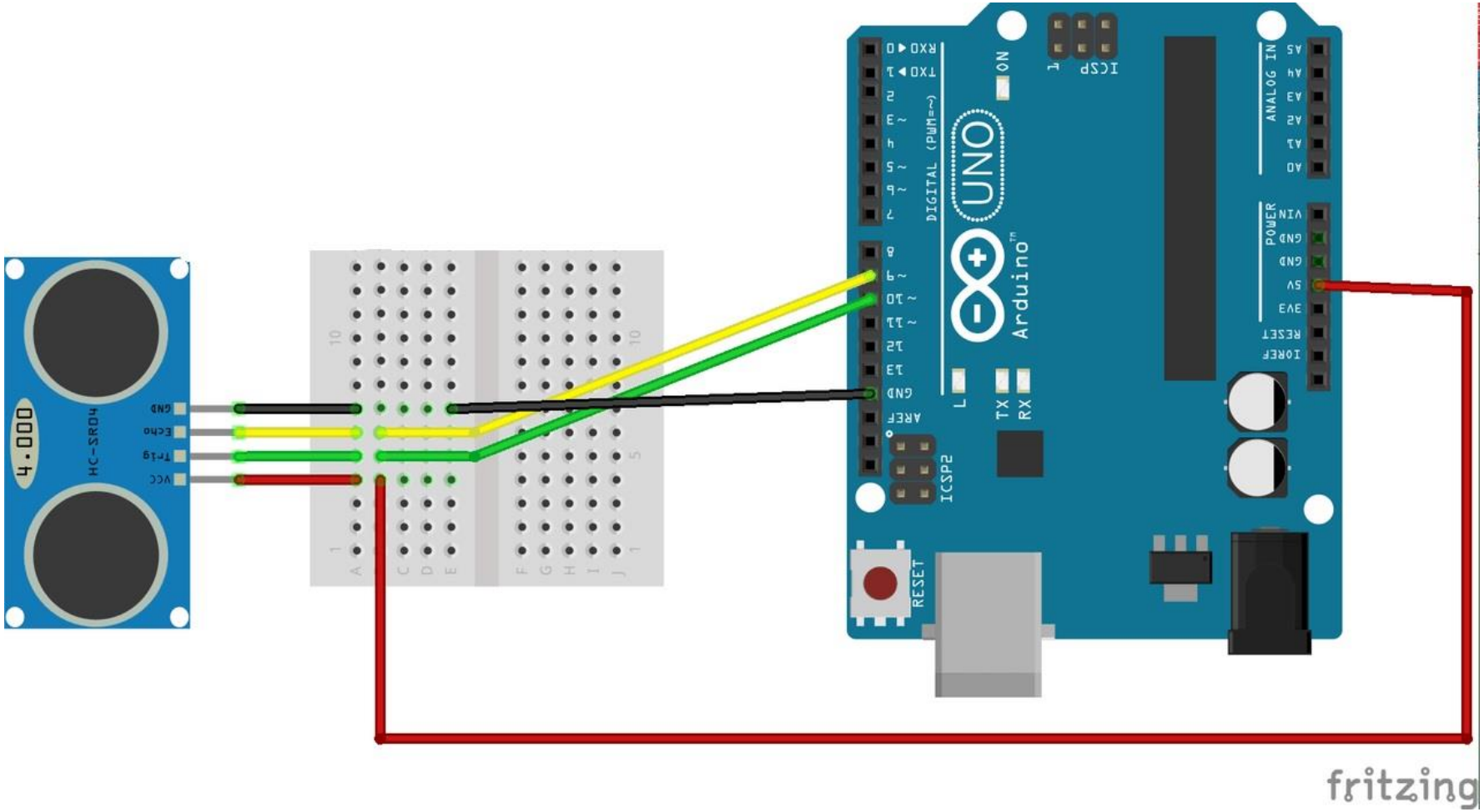

```
#define echoPin 9 // attach pin D2 Arduino to pin Echo of HC-SR04
#define trigPin 10 //attach pin D3 Arduino to pin Trig of HC-SR04

long duration; // variable for the duration of sound wave travel
int distance; // variable for the distance measurement

void setup() {
  pinMode(trigPin, OUTPUT); // Sets the trigPin as an OUTPUT
  pinMode(echoPin, INPUT); // Sets the echoPin as an INPUT
  Serial.begin(9600); // // Serial Communication is starting with 9600 of baudrate speed
}
void loop() {
  // Clears the trigPin condition
  digitalWrite(trigPin, LOW);
  delayMicroseconds(2);
  // Sets the trigPin HIGH (ACTIVE) for 10 microseconds
  digitalWrite(trigPin, HIGH);
  delayMicroseconds(10);
  digitalWrite(trigPin, LOW);
  // Reads the echoPin, returns the sound wave travel time in microseconds
  duration = pulseIn(echoPin, HIGH);
  // Calculating the distance
  distance = duration * 0.034 / 2;  // Speed of sound wave divided by 2 (go and back)
  // Displays the distance on the Serial Monitor
  Serial.print("Distance: ");
  Serial.print(distance);
  Serial.println(" cm");
}
```

Ultrasonic_Arduino | Arduino 1.8.14 Hourly Build 2020/10/09 12:33

File Edit Sketch Tools Help

Ultrasonic_Arduino

```
#define echoPin 9 // attach pin D2 Arduino to pin Echo o
#define trigPin 10 //attach pin D3 Arduino to pin Trig o

long duration; // variable for the duration of sound wav
int distance; // variable for the distance measurement

void setup() {
  pinMode(trigPin, OUTPUT); // Sets the trigPin as an OU
  pinMode(echoPin, INPUT); // Sets the echoPin as an INP
  Serial.begin(9600); // // Serial Communication is star
}
void loop() {
  // Clears the trigPin condition
  digitalWrite(trigPin, LOW);
  delayMicroseconds(2);
  // Sets the trigPin HIGH (ACTIVE) for 10 microseconds
  digitalWrite(trigPin, HIGH);
  delayMicroseconds(10);
  digitalWrite(trigPin, LOW);
  // Reads the echoPin, returns the sound wave travel ti
  duration = pulseIn(echoPin, HIGH);
  // Calculating the distance
  distance = duration * 0.034 / 2;  // Speed of sound wave divided by 2 (go and back)
  // Displays the distance on the Serial Monitor
  Serial.print("Distance: ");
  Serial.print(distance);
  Serial.println(" cm");
}
```

COM3

Send

```
Distance: 6 cm
Distance: 6 cm
Distance: 5 cm
Distance: 5 cm
Distance: 6 cm
Distance: 6 cm
Distance: 6 cm
Distance: 5 cm
Distance: 5 cm
Distance: 5 cm
Distance: 5 cm
Distance: 5 cm
Distance: 5 cm
Distance: 5 cm
Distance: 6 cm
Distance: 6 cm
```

Autoscroll Show timestamp Newline 9600 baud Clear output

Done compiling.

```
Sketch uses 2998 bytes (9%) of program storage space. Maximum is 32256 bytes.
Global variables use 204 bytes (9%) of dynamic memory, leaving 1844 bytes for local variables. Maximum is 2048 bytes.
```

23 Arduino Uno on COM3

Type here to search ENG 12:13 PM 11/14/2020

Ultrasonic Sensor with Arduino and Buzzer

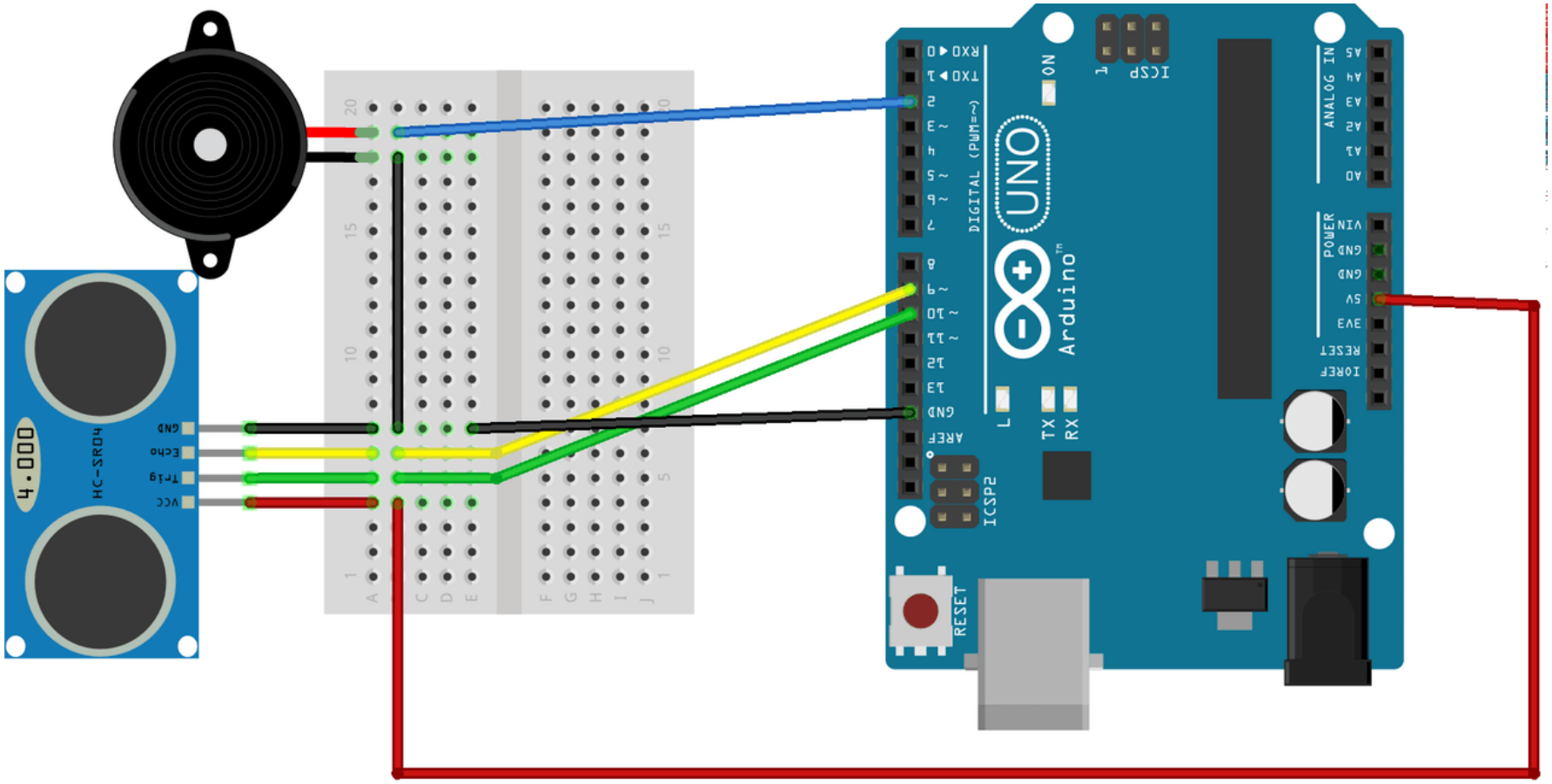

```
#define echoPin 9 // attach pin D2 Arduino to pin Echo of HC-SR04
#define trigPin 10 //attach pin D3 Arduino to pin Trig of HC-SR04

long duration; // variable for the duration of sound wave travel
int distance; // variable for the distance measurement

void setup() {
  pinMode(trigPin, OUTPUT); // Sets the trigPin as an OUTPUT
  pinMode(echoPin, INPUT); // Sets the echoPin as an INPUT
  pinMode(8,OUTPUT); //Buzzer pin or LED pin    [[NEW]]
  Serial.begin(9600); // // Serial Communication is starting with 9600 of baudrate speed
}
void loop() {
  // Clears the trigPin condition
  digitalWrite(trigPin, LOW);
  delayMicroseconds(2);
  // Sets the trigPin HIGH (ACTIVE) for 10 microseconds
  digitalWrite(trigPin, HIGH);
  delayMicroseconds(10);
  digitalWrite(trigPin, LOW);
  // Reads the echoPin, returns the sound wave travel time in microseconds
  duration = pulseIn(echoPin, HIGH);
  // Calculating the distance
  distance = duration * 0.034 / 2;  // Speed of sound wave divided by 2 (go and back)
  if (distance < 20) {digitalWrite(8,HIGH); delay(100);}   digitalWrite(8,LOW); //[[NEW]]
  Serial.print("Distance: ");
  Serial.print(distance);
  Serial.println(" cm");
}
```

Ultrasonic Sensor with Arduino and LCD

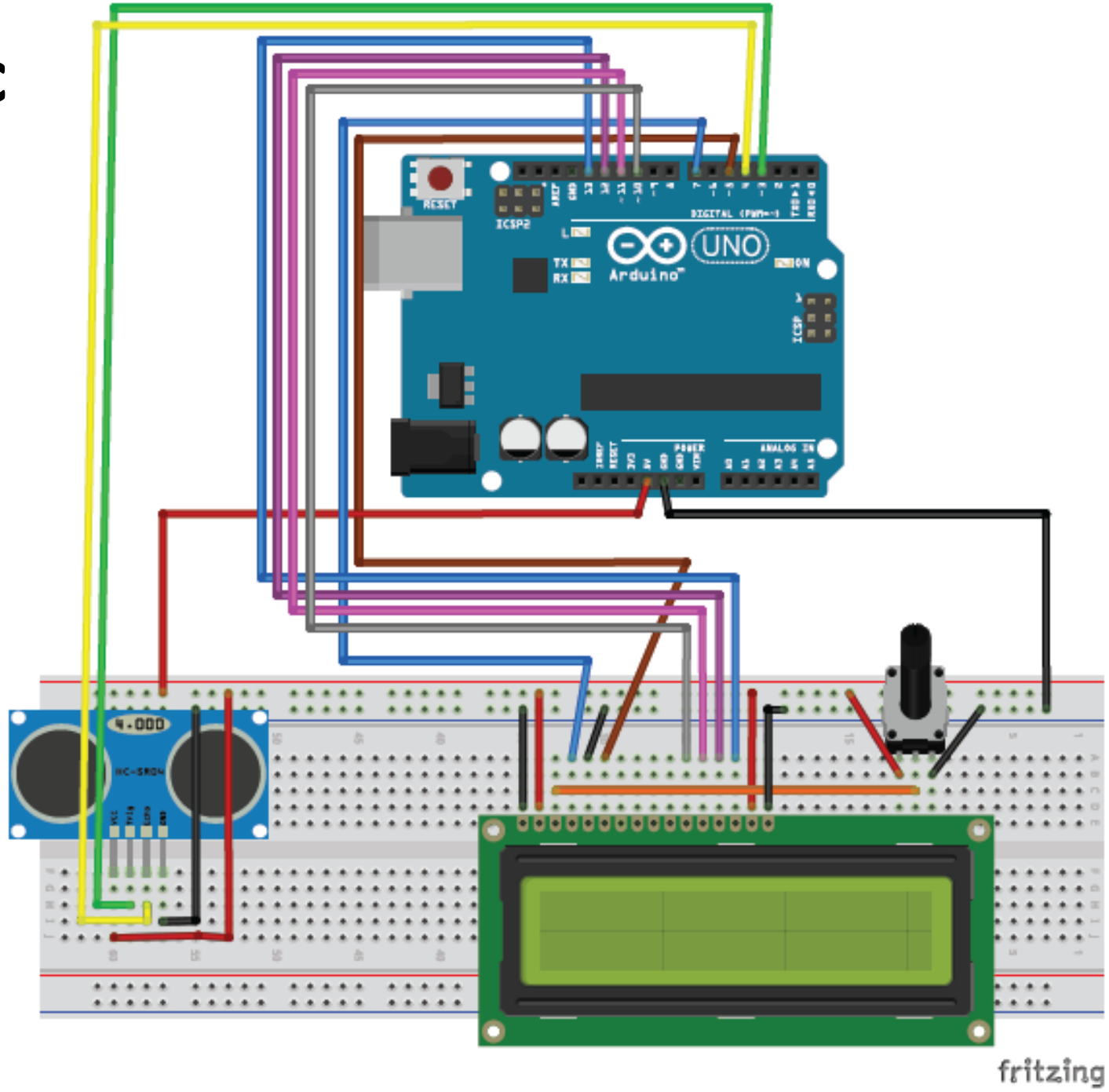

```
#include <LiquidCrystal.h> //Load Liquid Crystal Library
LiquidCrystal LCD(7,6,5,10,11,12,13);  //Create Liquid Crystal Object called LCD
#define trigPin 10 //Sensor Echo pin connected to Arduino pin 10
#define echoPin 9 //Sensor Trip pin connected to Arduino pin 9
void setup() {
  pinMode(trigPin, OUTPUT);
  pinMode(echoPin, INPUT);
  LCD.begin(16,2); //Tell Arduino to start your 16 column 2 row LCD
  LCD.setCursor(0,0);  //Set LCD cursor to upper left corner, column 0, row 0
  LCD.print("Electronic Meter:");  //Print Message on First Row
  Serial.begin( 9600 );}
void loop() {
  long duration, distance;
  digitalWrite(trigPin, LOW);
  delayMicroseconds(2);
  digitalWrite(trigPin, HIGH);
  delayMicroseconds(10);
  digitalWrite(trigPin, LOW);
  duration = pulseIn(echoPin, HIGH);
  distance = (duration/2) / 29.1;
  Serial.print(distance);
  Serial.println( "cm" );
  LCD.setCursor(0,1);  //Set cursor to first column of second row
  LCD.print("                 "); //Print blanks to clear the row
  LCD.setCursor(0,1);   //Set Cursor again to first column of second row
  LCD.print(distance); //Print measured distance
  LCD.print(" cm");  //Print your units.
  delay(250); //pause to let things settle
}
```

Questions ?

Thank you