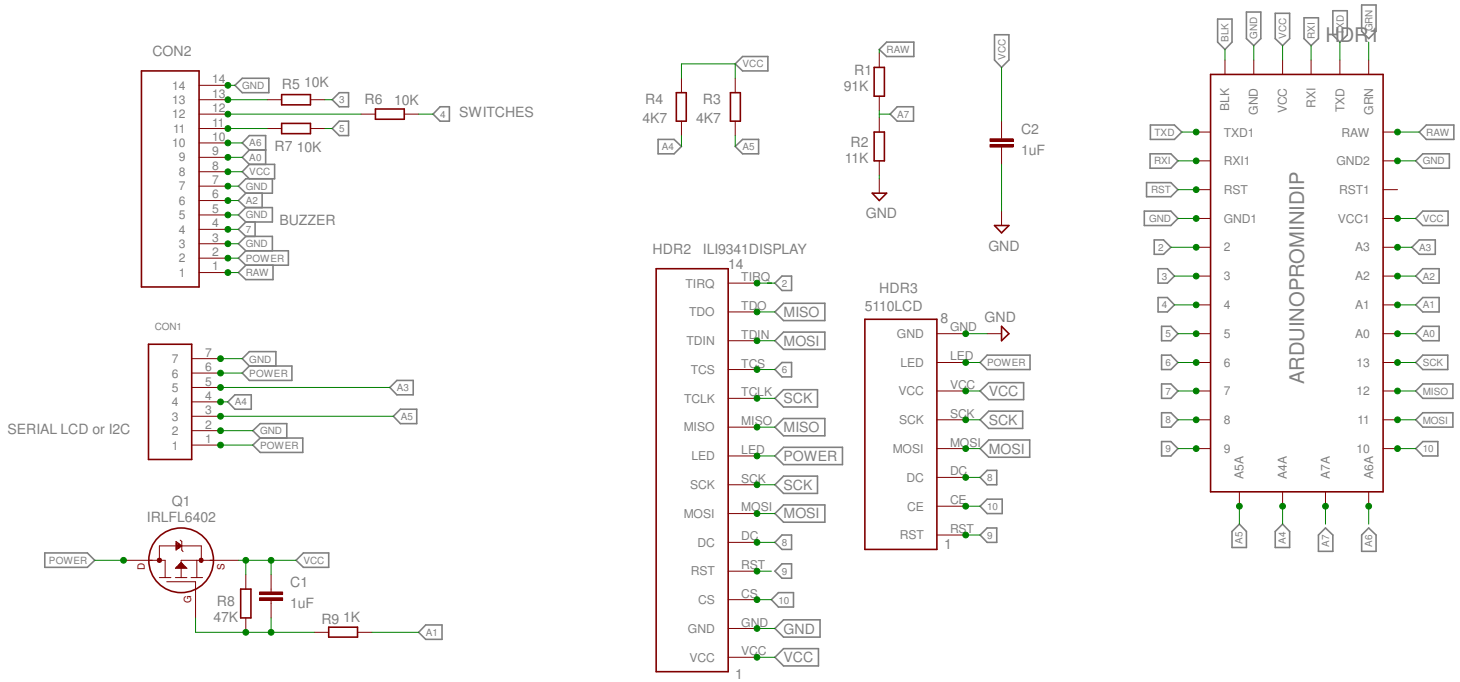

Serial Display Backpack

TITLE: Backpack V3

Stuart Robinson

REV:

Date: 23/03/16

Sheet: 1/1