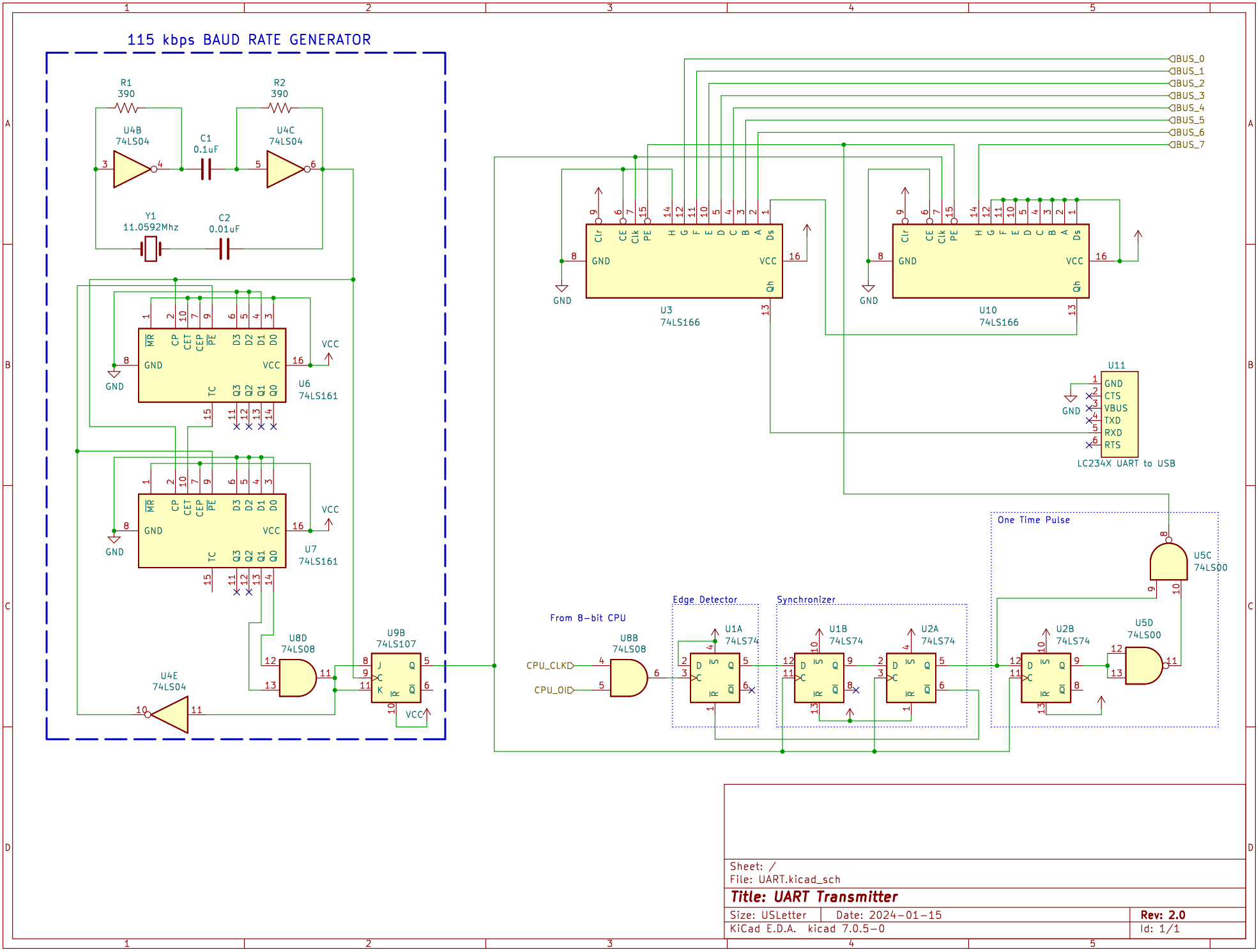

Sheet: /
File: UART.kicad_sch

Title: UART Transmitter

Size: USLetter	Date: 2024-01-15	Rev: 2.0
KiCad E.D.A. kicad 7.0.5-0		Id: 1/1