Guest Services

Best seat in the house

Staxi guest services chair offers no-compromise performance and any-situation versatility.

staxi® +1.877.677.8294

staxi.com/guest-service | US TM106656US00 / US TM108973US00

Guest Services

Table of contents

Welcome to Staxi

3 Staxi Advantage
4/5 Job Hazard Analysis & Ergonomic Assessment

Pre-Use and Training

6 Recommended Pre-use Inspection Checks
7 Top 10 Training Tips

Safety and Maintenance

8 Staxi Care
9 Maintenance & Inspection Schedule
10 Do not stack
11 Spares, Parts and Sevice Locator

Warranty

12 Aviation Warranty
13 Contact Details

Appendix

14 Staxi Quick Links Information
15 Brake Inspection Check
16 Options for hand placement
17 Certification

staxi advantage

- Safety - No need to remember to set brakes — just press to go and release to brake. The automatic braking system & side entry remove the two top causes of wheelchair accidents at event venues. Plus, staff training is a breeze.
- Durability - The Tonka® truck of transport chairs, Staxi chairs provide years and years of comfortable use with extraordinarily little maintenance required.
- Space Saving – 5 nested chairs require less than 7 linear feet of floor space! Stage a set near every entrance.
- Easy to Use – Comfortable for both occupant and attendant, Staxi chairs are easy to push (even with one hand!), easy to maneuver, and easy to stop. And when stopped, the chair stays stopped. None of the free-rolling that causes so many wheelchair accidents.
- Dignified - With a 600lb weight capacity, Staxi transport chairs can accommodate every visitor to your venue. No more embarrassing searches for a bigger wheelchair.

Job Hazard Analysis & Ergonomic Assessment for STAXI Transport Chairs

1. **Task Description:** The task involves the maneuvering and operation of STAXI transport chairs by aviation, healthcare, and facility services personnel to transport occupants safely and efficiently.

2. **Potential Hazards from Operation of Conventional Wheelchairs:**

- Musculoskeletal strain due to a forward-bent pushing posture.
- Wrist strain from single, static positioning required during pushing.
- Lower back strain from effort required to push chairs with a 1:1 weight distribution.
- Hand injuries from collisions with doorframes.
- Risk of chair movement during occupant transfers leading to slips or falls.
- Lower back strain from bending to raise and lower the footrest.
- Lower back strain from bending to set or release the friction brake.

3. **Hazard Mitigation & Ergonomic Features of STAXI Transport Chairs:**

Chair Frame Design:

- The upright push bar design maintains an ergonomic posture, reducing operator fatigue.
- The availability of either-side occupant entry & exit allows the footrest to remain in the down position at all times, eliminating potential back strain from bending to adjust the footrest.
- The integrated lower luggage compartment and seat-back basket provide safe and secure storage for occupant and operator belongings, allowing the operator to focus solely on pushing.

Weight Distribution & Maneuverability:

- STAXI transport chairs have a superior weight distribution, reducing resistance and effort required for movement. Greater weight distributed on the back wheels virtually eliminates front caster “squirm” and reduces the operator's effort during movement & maneuvering. More weight on the back wheels means less effort required by the operator.
  - AP010 Guest Services Chair has a 3:1 rear-wheel to front-caster weight ratio.
- Conventional wheelchairs typically have a 1:1 ratio or worse, increasing resistance and strain on the operator.
- Independent European testing found that a weight distribution ratio of 2.2:1 or higher significantly enhances ease of movement and reduces required operator exertion.
- STAXI’s weight distribution allows for easy single-handed pushing and effortless backward maneuverability, reducing twisting and bending injuries.

Force Required for Pushing

- Based on occupant weight and favorable weight distribution between the front casters and rear wheels, force measurements indicate minimal exertion is needed to start and maintain chair movement:
  - 100 lbs occupant: 3.5 lbs initial push, 2 lbs sustained push.
  - 250 lbs occupant: 8 lbs initial push, 4.4 lbs sustained push.
  - 300 lbs occupant: 9.6 lbs initial push, 5.2 lbs sustained push.
- Lower force requirements reduce the risk of back and shoulder injuries.

Ergonomic Handlebar & Braking System:

- A full-width, single push bar replaces conventional bicycle-style handles, allowing for varied, natural hand positions.
- The height of the handlebar minimizes the need to bend at the waist, reducing lower back strain.
- Most operators can push with a straight back, mitigating repetitive strain injuries.
- Multiple grip positions prevent wrist fatigue and discomfort, reducing the risk of carpal tunnel syndrome.
- The automatic failsafe braking system eliminates the need to bend and manually engage brakes, reducing back strain and potential injuries.
- The automatic, fail-safe braking ensures the chair remains stationary during occupant transfers, preventing accidental movement that could result in injury from sudden and abrupt motion.

Ergonomic Handlebar & Braking System:

- STAXI transport chairs include a luggage rack, document basket, and hanging hooks to store personal belongings, relieving the operator from juggling chair operation and occupant belongings.
- Reduces the need for attendants to carry heavy loads, mitigating back and shoulder strain.

4. Recommendations for Safe Use:

- Train personnel on proper pushing techniques to maintain ergonomic posture.
- Encourage frequent hand position variation while pushing to reduce wrist fatigue.
- Utilize built-in storage areas to avoid carrying additional loads and maintain focus on safe movement.
- Perform regular maintenance checks to ensure smooth mobility and braking function.
- Never vertically stack empty STAXI transport chairs. This practice not only voids the warranty but, more importantly, may damage casters, causing them to disengage from their housing without warning. Additionally, the act of stacking and unstacking exposes personnel to potential back strain.

5. Conclusion: STAXI transport chairs are designed to enhance ergonomic efficiency and reduce injury risks associated with manual wheelchair transport. The optimized weight distribution, adjustable hand positions, effortless maneuverability, and integrated braking system contribute to significant safety and comfort improvements for both the operator and occupant.

Recommended Pre-use Inspection Checks.

Thank you for choosing Staxi. Our commitment to no-compromise performance and any-situation versatility begins at the factory and continues throughout the life of each chair. Every chair is thoroughly inspected after manufacturing and again prior to shipment, to ensure perfect working order and pristine appearance. The checklist below will help you identify any issues that may have occurred during shipment and expedite resolution so you can enjoy your new chair(s).

1 Prior to acceptance, visually inspect each shipping container for obvious signs of shipping damage. If there is significant damage to the outer packaging i.e. you can see the goods inside are damaged before you unpack it or the products are coming off the skid, please refuse the order and contact **Staxi** Customer Service at 1.866.969.1463 or **customerservice@staxi.com**. If there is less severe damage to the outer packaging, please note this on the delivery slip before signing for the order. You may unpack your order as normal as in most cases the damage is only to the outer packaging. If there is damage to any product inside, please contact Customer Service.

2 Once the outer packaging has been checked and you have signed for your order, remove all packaging, including the protective foam around the push bar.
Important: The brake will not engage properly with the protective foam strip attached.

3 Visually inspect each chair for any signs of shipping damage that were not apparent prior to unpacking.

4 Complete your first monthly maintenance checklist. You should complete these checks once a month for the life of your Staxi to ensure proper functionality. The Maintenance & Inspection Schedule and Checklist is available for download from the Customer Service section of Staxi.com. This checklist enables you to ensure:

- The fail-safe braking system is functioning properly. Note: For convenience, the brake inspection
- process is included on the rear of this document.
- The rear wheels and front casters are securely attached and will offer a quiet, smooth ride.
- The armrests are secure, easy to lift and remain in an upright position until manually lowered.
- The footrests are secure, easy to lift and remain in an upright position until manually lowered.

5 If your chair arrived with accessories that require installation, instructions are included in the accessory packaging and on our website.

6 If any damage cannot be corrected using the maintenance information available, contact Customer Service immediately at 1.866.969.1463 or **customerservice@staxi.com**.

When the pre-use inspection is complete and any issues have been resolved, remove this tag and enjoy your new chair!

In addition to the Maintenance & Inspection Schedule and Checklist, Staxi.com offers a wealth of important and useful resources under the Customer Service section of our website: FAQ's, manuals, maintenance videos and more. We strongly recommend you visit the site as soon as possible to further familiarize yourself with the operation, maintenance and cleaning of your new Staxi.

Top 10 Training Tips

VERY IMPORTANT: Do not squeeze the brake bar when the person is entering or exiting the Staxi chair.

It is safer and easier to enter and exit the Staxi chair from the side. By lifting one armest, the person can be seated. Once seated, the person pivots their body into a forward facing position. The armrest is lowered once they are comfortably in position.

Ensure the person is positioned comfortably and safely on the seat with both feet on the footrests.

The footrests can be in the lowered position at all times. This will encourage side entry and means less bending for the caregiver.

To push the Staxi, squeeze the brake bar and move.

To stop, slow the Staxi and release the brake bar. The brake will automatically lock.

When stopped, exit the Staxi by lifting the armrest the same way as on entry. The person can pivot to a side facing position on the seat placing their feet firmly on the ground and then stand.

To move through a closed doorway, it is easier to use one hand to pull the Staxi backwards through the door and the other hand to hold open the door.

Staxi has two convenient storage areas; one area under the seat for suitcases and larger bags as well as a second area behind the seat for magazines and documents. This second area also has hooks to hang items such as purses or smaller bags.

The maximum weight capacity for Medical and Commercial Staxi is 600lbs, for Ranger Staxi 800lbs and for Max Staxi 1000lbs. The weight capacity for your chair is shown on the handle bar label. The armrests may remain in the raised position if required when transporting larger persons.

staxi Care

A hallmark of Staxi transport chairs is years & years of low-maintenance, durability, and reliability. The key to keeping your Staxi fleet in great condition and always ready to roll is for operators to Look, Hear, and Feel during everyday use.

Look

- If the seat cushion or armrest cover is torn, ask your maintenance department to order replacement parts. While this doesn't affect chair operation, it is important for aesthetics, patient comfort, and most-importantly for infection control.
- If footrests or armrests fail to stay in the lifted position until lowered, tightening is required. Remove the chair from service immediately and contact maintenance.
- If any parts are loose or missing, remove the chair from service immediately, and notify maintenance.

Hear

- If you hear a rhythmic clicking sound when the chair is moving forward, an adjustment to the braking system is required. Contact maintenance.
- If there is a "thumping" sound when the chair is in motion, it is likely time for new wheels and/or casters. This doesn't a□ect patient safety, but will result in a smooth, quiet, and more e□ortless move. Notify maintenance.

Feel

- Gently push the chair forward without disengaging the brake. If the chair moves, the braking system requires adjustment. Remove the chair from service and contact maintenance.

To keep your Staxi's looking as good as they operate, all painted & touch surfaces are protected with antimicrobial AlphaSan® RC5000. Regular cleaning and disinfection should be done according to your facility's regulations and procedures, using any hospital-approved non-corrosive cleaning agent.

staxi® +1.877.677.8294

staxi.com/guest-service | US TM106656US00 / US TM108973US00

Maintenance & Inspection Schedule:
Inspect and maintain your Staxi chairs regularly

Staxi Transport Chairs are low maintenance and long lasting.

For safe and optimum performance we strongly recommend that you follow this schedule.

Monthly Inspection Checklist	Quarterly Maintenance and as required
Brake	
The brake is an automatic fail-safe system. When new the brake maybe a little stiff, but this will ease with use. 1. Does the brake operate smoothly? 2. Do the brake pins that engage in the brake locking cogs move smoothly in and out of the locking cogs when the brake is operated? 3. Do the pins bottom out in the locking cogs when the brake is released? 4. Does the brake make a clicking sound when the chair is pushed with the brake off? If you answer NO to any of questions 1, 2 or 3, the brakes need adjusting. If you answer YES to question 4 the brakes need adjusting.	**Lubricate:** Apply lubricant on and between the moving parts. Synthetic lubricants are recommended. Other lubricants such as WD40 can also be used. Adjust: Squeeze the brake bar against the push bar and hold. Adjust the brake by turning the nut at the top of the black lower brake rod. While doing this watch the pin that engages in the brake locking cogs. When this pin is just clear of the cogs the brake is adjusted correctly. Release the brake bar and make certain that when released, the pin is seated in the bottom of the brake locking cogs. Please do not over-tighten or over-adjust the brake.
Rear Wheels and Front Casters	
Inspect for wear. If either shows any signs of excessive wear, replace them. Make sure that the screws that hold the rear wheels on are tight. Make sure that the front casters are fullyscrewed into the chair frame, and are tight.	The rear wheel and front caster bearings are sealed and need no maintenance.
Armrests	
1. Do they lift smoothly? 2. Are they secure? 3. Do they stay upright when moved to the upright position? If you answered NO to any of these questions the armrests need adjusting.	**Adjust** Adjust by tightening the inner nut until the armrest is adjusted correctly. When adjusted correctly, the armrest will move smoothly and stay upright when moved to the upright position. Then tighten the outer nut against the inner nut to lock them together. Use two wrenches to do this. Do this both sides.
Footrests	
1. Do they lift smoothly? 2. Are they secure? 3. Do they stay upright when moved into the upright position? If you answered NO to any of these questions the footrests need adjusting.	**Adjust** Adjust by tightening or loosening the nut on the footrest pivot. Be sure that the footrest will move smoothly, and stay upright when moved to the upright position.
Cleaning	
Cleaning should be done as frequently as required to maintain hygiene and safety.	**Chair:** Clean the chair using mild detergent and water, or car wash cleaners. Do not use abrasive cleaners. Power washers can be used. **Cushions:** You can clean the cushions using almost any cleaning fluids. Do not use bleach in high concentrations. Do not use any acid containing cleaning liquids.

YOU wouldn't DO THIS

SO PLEASE STOP doing this

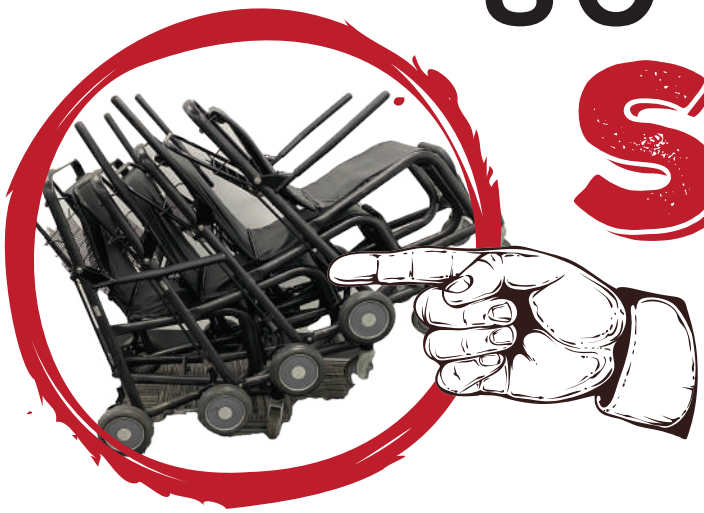

Stacking wheelchairs is unsafe. Stacking can result in injuries to employees or passengers. Sudden jolting stops to unstack may also cause hidden damage to frames and casters, which can result in serious passenger injury. Ask your supervisor about using a moving strap or rope for multiple chair transport.

Guest Services

Spares, Parts and Sevice Locator

CODE	Description
ST059	Cushion - One Piece - Black - Medical & Commercial
ST061	Comfort Cushion - Medical & Commercial
ST0106	Staxi Custom Caster Wrench - All Chairs
ST1010	Handle Bar Label Kit - Medical & Commercial w/plastic cover 500lbs
ST1011	Handle Bar Sticker Set - Medical & Commercial 500lbs - Pack of 5
ST1026	Handle Bar Label Kit - Commercial w/plastic cover 600lbs
ST1025	Handle Bar Sticker Set - Commercial 600lbs - Pack of 5
ST1160	Bumper Kit - Commercial & Ranger
ST1200	Upper Brake Kit - Medical & Commercial
ST1201	Lower Brake Kit - Medical & Commercial - Left & Right
ST1204	Upper Brake Weldment - Medical, Commercial, Ranger & Max - Left & Right
ST1302	Footrest Kit - Commercial, Boarding & Aisle
ST1402	Armrest Kit - Medical, Commercial, Ranger & Max - Left & Right
ST1403	Armrest Sleeve Kit - Medical, Commercial, Ranger & Max - Left & Right
ST1404	Arm Rest Bolt Kit - All Chairs - Left & Right
ST1500	Rear Wheel Kit - Medical & Commercial (Contains 1 Wheel)
ST1510	Front Caster Kit - Commercial, Max, Ranger & Boarding (Contains 1 Caster)
ST1550	Anti-Tip Wheel Kit - All Chairs - Left & Right
ST1600	Seat Back Kit - Medical & Commercial
ST1650	Seat Assembly Kit - Medical & Commercial
ST1700	Caster Mount Cover Kit - Commercial, Max, Ranger & Boarding - Left & Right
ST1902	Small Parts Kit - Commercial & Ranger
ST1904	Plastic Parts Kit - Medical, Commercial, Ranger & Max
ST0158	Rivet Tool Kit
ST0159	Staxi Tool Kit

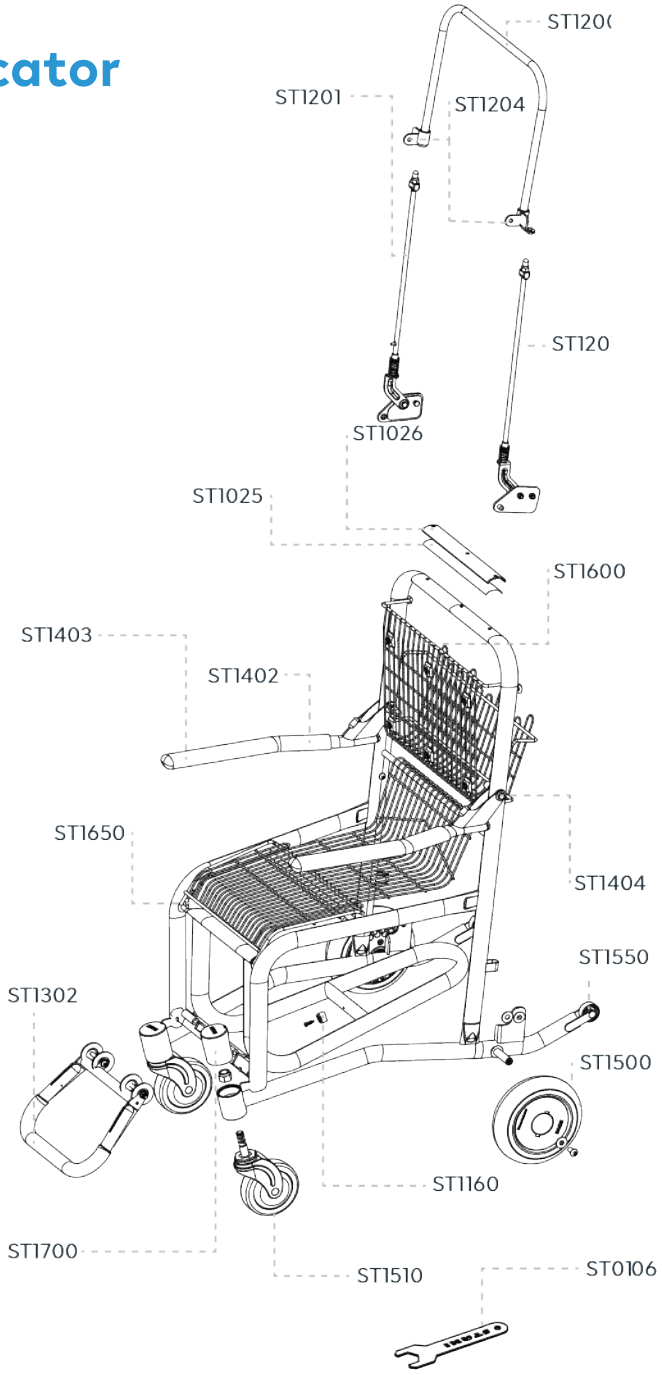

Aviation / Airport Warranty

All Staxi products sold for use in airport or airline operations receive 1 year of unlimited warranty protection. This includes cushions.

Every Staxi frame is protected by a limited lifetime warranty.

These warranties protect against defects in design, workmanship and materials that may arise under normal use conditions. Warranties do not cover normal wear and tear, theft, vandalism or any defect or deficiency that results, in whole or in part, from the following:

- alterations other than those authorized and detailed by Staxi
- improper, abusive, or extraordinary storage, handling, or usage
- using or combining Staxi equipment with parts or accessories other than those provided or recommended by Staxi
- improper installation of Staxi parts or accessories
- failure to follow inspection and maintenance procedures provided by Staxi
- patient weights that exceed the chair capacity
- acts of nature

Staxi Corporation does not assume any liability for damage resulting from improper or faulty installation, services provided by others, or use of the products in any other than the designed manner.

Staxi Corporation is not liable for any damages or necessary corrective work or repairs due to structural modification of any product that are not authorized in writing by Staxi.

All approved warranty claims are capped at the replacement price of the product(s). Warranties commence upon shipment from the Staxi warehouse.

For answers to any questions, please contact Customer Care at **info@staxi.com**

Your Staxi team is here to help!

Visit staxi.com/contact-us
for full details and assistance

Sales

nickh@staxi.com

1.877.677.8294

Parts line

1.877.360.8108

Visit staxi.com
for the latest updates and information.

staxi® +1.877.677.8294

staxi.com/guest-service | US TM106656US00 / US TM108973US00

Staxi Quick Links Information

Please use these links to access useful pages on our website that you may need to assist with your S taxi chairs from the moment you receive them.

Pre-Service Inspection - https://staxi.com/pre-service-inspection/
Please use this link to show you how to check your chair over on arrival to ensure everything is working correctly before the chair is put into service.

Using your Staxi - https://staxi.com/using-your-staxi/
Here you can find videos with information about transferring a passenger into and out of the Staxi chair. You can also find information about our accesso ries and how to use them, including stands and docking stations.

Certification Page - https://staxi.com/certification/
Please use this page to receive your certification on how to use the S taxi chairs safely and confidently You can complete a maintenance certification via this link too.

Maintenance - https://staxi.com/maint-enance/
This page has a maintenance schedule including the cleaning instructions for the chairs. There are also videos on how to install wheels, casters cushions; how to adjust the brakes, footrests, and armrests and how to operate the head rest on our a isle chairs.

Installation Guides - https://staxi.com/install-guides/
Here you will find videos on how to install accessories and replacement parts.

Spare Parts Locators - https://staxi.com/spare-parts-locator/
This page has our spare parts locators for all our chairs.

Accessories Stands - https://staxi.com/accessories/
Here you can find our accessories and stands that we have available.

Frequently Asked Questions Page - https://staxi.com/faq/
If you have any questions about Staxi chairs and products you are extremely likely to find an answer on this page but if not please contact our customer service team who will happily help customerservice@staxi.com

Testimonials - https://staxi.com/testimonials/
We have some wonderful comments from our customers on this page, we are very proud of these.

Contact Us - https://staxi.com/contact/
This link enables you to get in touch with us if you have any questions, issues, or comments.

Important:

Brake Inspection Check

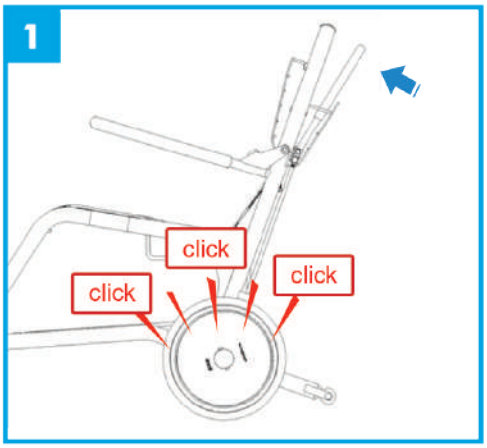

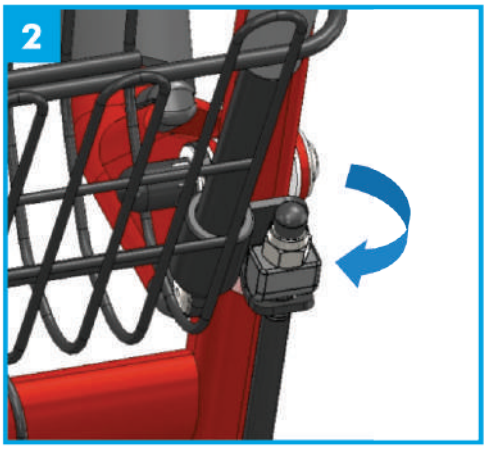

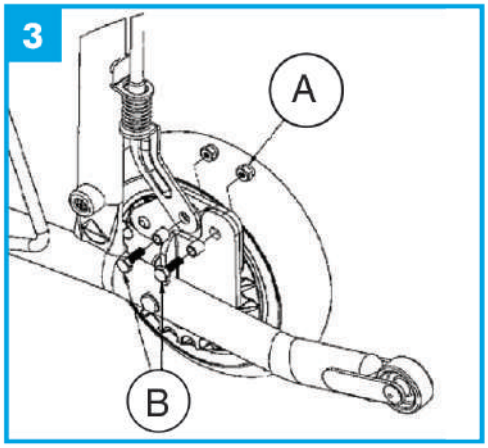

1 To check the brake operation, press the brake bar forward to disengage. With the brake disengaged, gently push the chair forward. It should roll quietly, smoothly and easily.

2 If you hear a 'click' when the chair moves, the brake needs an adjustment.

3 To adjust the braking system, press the brake bar against the push bar and hold. Next, adjust the brake by turning the nut at the top of black lower brake rod. While doing this, watch the pin that engages in the brake locking cogs. The brake is adjusted properly when this pin is just clear of the cogs. Make certain that when the brake bar is released, the pin is seated in the bottom of the brake locking cogs.

4 If the brake is not falling into the socket, loosen bolts very slightly or until the brake falls. See diagram 3 (A & B).

Before use, please download the Owner's Manual from the Customer Service section of our website at: www.staxi.com

Options for hand placement

There are two methods to disengage the brake while pushing the Staxi chair:

1 Grip: Staxi's handlebar can be gripped with fingers and thumb squeezing the handle bar and brake bar together. (Figure 1)

2 Thumbless Pushing: Fingers and thumb are aligned. With two hands, the brake bar can be pushed to reach the handle bar. (Figure 2)

Figure 1

Figure 2

Certification

Create meaningful experiences for Staxi passengers with safety and confidence.

Scan the QR code >>
or CLICK HERE

https://www.proprofs.com/training/course/?title=staxi-education-commercial_5c9a9fb18d709

staxi® +1.877.677.8294

staxi.com/guest-service | US TM106656US00 / US TM108973US00