Ghaith – Smart Humanitarian Relief Tent

Course: Embedded Systems
Semester: Spring 2026
Institution: Al-Razi University
Submission Date: January 26, 2026

Team Members

ID	Name
2	Abrar Marwan Al-Dubai
25	Raghad Eskander Mokbel
19	Hafsa Abdullah Al-Azazi
93	Roa'a Montaser Al-Maddi
15	Belqees Adel Jamil

Instructor: Eng. Majd Al-Surihi

---

1. Abstract

Providing safe shelter, warmth, and clean water is a critical challenge for displaced families in humanitarian crises, particularly in regions such as Gaza. This project presents **"Ghaith – Smart Humanitarian Relief Tent"**, a smart embedded-system-based tent designed to improve living conditions during emergencies.

The system integrates a temperature sensor (DS18B20), a rain detection sensor, a relay-controlled heating element, and a servo-controlled roof mechanism. When ambient temperature drops below a predefined threshold, the heating system is automatically activated to provide warmth. Additionally, rainfall is detected and used to trigger a mechanical response for protection and water collection. Built around an Arduino Uno microcontroller, the system operates autonomously with minimal human intervention. The prototype

demonstrates an effective, low-cost, and scalable solution aimed at supporting vulnerable populations during harsh environmental conditions.

---

2. Introduction

2.1 Background and Motivation

Humanitarian shelters often lack basic environmental control such as heating and water collection. In cold and rainy conditions, especially in emergency zones like Gaza, families face severe challenges related to exposure and lack of resources. This project was motivated by the need to design a simple yet intelligent shelter system that enhances safety, warmth, and sustainability using embedded systems.

2.2 Problem Statement

Traditional emergency tents provide basic physical cover but fail to adapt to environmental changes such as temperature drops or rainfall. Manual solutions are inefficient and unreliable. There is a strong need for an automated smart tent capable of responding dynamically to environmental conditions.

2.3 Project Objectives

- **Real-time Monitoring:** Monitor ambient temperature and rain presence in real time.
- **Automated Heating:** Automatically activate a heating system when temperature falls below 30°C and deactivate it when it exceeds 35°C.
- **Environmental Protection:** Detect rainfall and control a servo motor to adjust the tent's structure for protection.
- **Efficiency:** Design a low-cost and reliable embedded solution suitable for humanitarian use.

2.4 Scope and Limitations

This project focuses on a functional prototype built using Arduino Uno. The system is designed for demonstration and educational purposes. Power is supplied via low-voltage sources, and the heating element is limited in strength for safety reasons. Internet connectivity and large-scale deployment are outside the scope of this implementation.

---

3. System Overview

3.1 High-Level Description

The system operates as an autonomous smart control unit. Sensors continuously monitor temperature and rain conditions. Based on sensor data, the microcontroller makes decisions to control actuators such as the heater (via relay) and the servo motor.

3.2 Functional Description

- **Sensing:** DS18B20 measures ambient temperature; Rain sensor detects presence of rainfall.
- **Processing:** Arduino Uno processes sensor data and executes control logic.
- **Actuation:** Relay module controls the heating element; Servo motor adjusts tent components for rain handling.
- **Feedback:** System status is monitored through Serial communication.

3.3 Use Case Scenario

During cold weather, when the temperature drops below 30°C, the heater automatically turns ON to provide warmth. As temperature rises and reaches 35°C, the heater is switched OFF. When rainfall is detected, the servo motor activates to assist in rainwater handling or closing the roof.

---

4. Hardware Design

4.1 Components List

Quantity	Specification	Component
1	Arduino Uno	Microcontroller
1	DS18B20 (Waterproof)	Temperature Sensor
1	FC-37	Rain Sensor
1	5V Relay (Active HIGH)	Relay Module
1	Servo Motor	Actuator
1	Low-voltage Heater	Heating Element

Quantity	Specification	Component
1	4.7kΩ Resistor	Passive

4.2 Component Justification

- **Arduino Uno:** Selected for its simplicity, reliability, and wide community support.
- **DS18B20:** Offers reliable digital temperature readings and is waterproof, making it suitable for outdoor use.
- **Relay Module:** Allows safe control of higher power components (heater) using low-voltage signals.
- **Servo Motor:** Provides precise mechanical control for the tent's structural adjustments.

---

5. Software Design

5.1 Development Environment

- **Language:** C++ (Embedded)
- **IDE:** Arduino IDE
- **Libraries:** OneWire, DallasTemperature, Servo

5.2 Software Architecture

The software follows a polling-based architecture. Sensor readings are obtained periodically, and conditional logic determines actuator behavior. A hysteresis approach (30°C to 35°C) is used for heater control to prevent frequent switching and extend component life.

5.3 Control Algorithm

1. **Initialize** all sensors and actuators.
2. **Read** temperature from DS18B20.
3. **If** temperature < 30°C → **Heater ON**.
4. **Else If** temperature ≥ 35°C → **Heater OFF**.
5. **Read** Rain Sensor.
6. **If** Rain detected → **Servo Move to Close**.
7. **Else** → **Servo Move to Open**.
8. **Repeat** loop.

---

6. System Flowchart

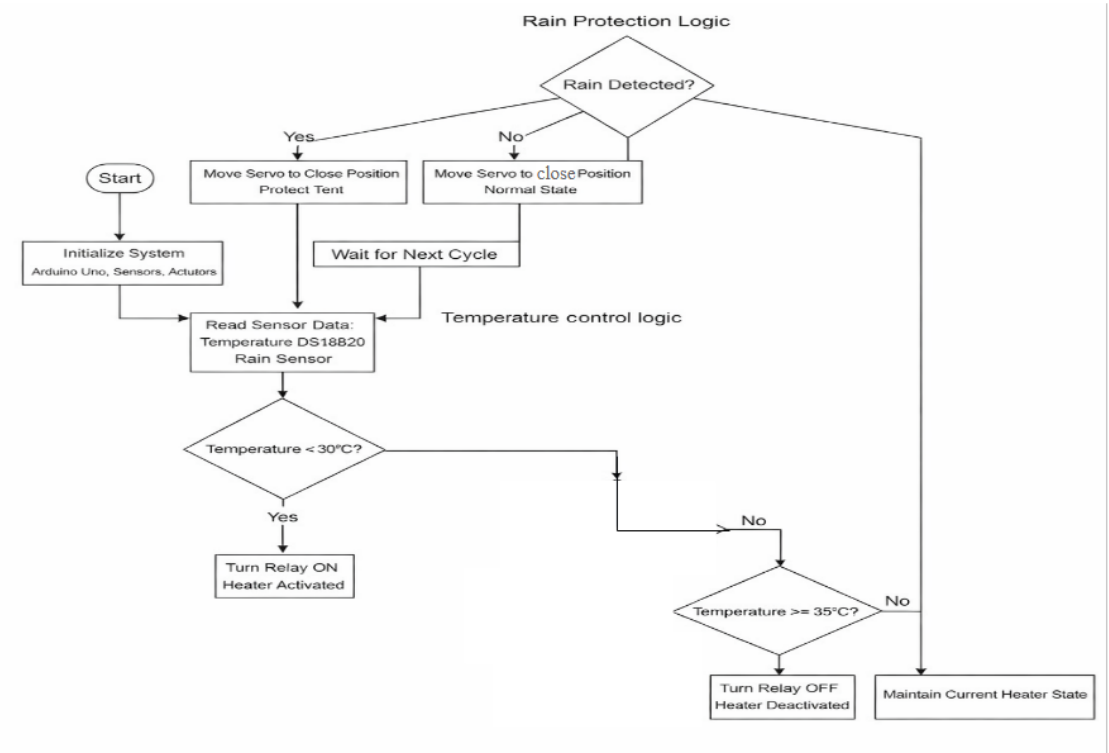

7. Circuit Diagram

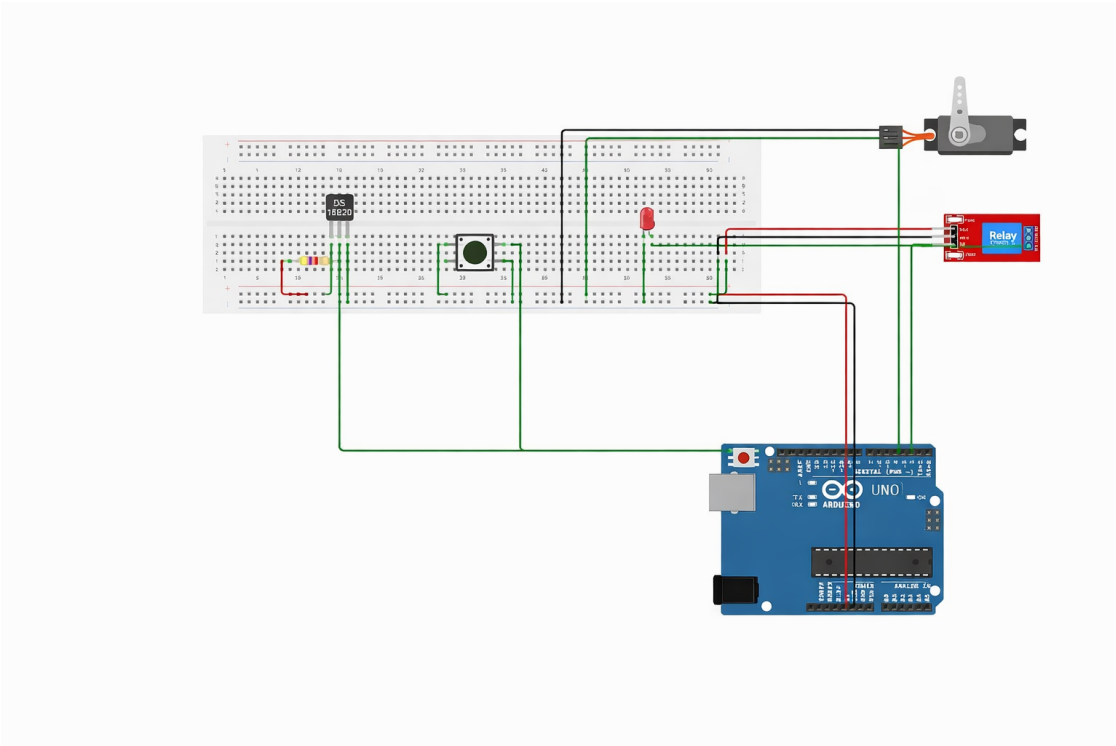

8.Testing and Validation

8.1 Testing Strategy

Each component was tested individually before system integration. Temperature readings were verified manually, and relay activation was confirmed using LED indicators.

8.2 Test Cases

Status	Expected Result	Condition	Test Case
Pass	Heater ON	Temp < 30°C	TC-01
Pass	Heater OFF	Temp ≥ 35°C	TC-02
Pass	Servo Activated	Rain Detected	TC-03
Pass	System Safe State	Sensor Error	TC-04

9. Results and Discussion

The system successfully responded to environmental changes in real time. Heater control was stable, and hysteresis logic prevented rapid switching. While the heater provided limited warmth due to safety constraints, the concept proved effective for humanitarian shelter applications. The integration of the rain sensor and servo motor added a crucial layer of protection for the occupants.

10. Conclusion

The **Ghaith Smart Humanitarian Relief Tent** demonstrates how embedded systems can be used to address real-world humanitarian challenges. The project successfully integrates sensing, processing, and actuation into a cohesive and meaningful solution that improves safety and comfort in emergency shelters.

11. Future Work

- **Solar Power Integration:** To make the system fully sustainable in off-grid areas.
- **IoT Monitoring:** Integrate GSM or Wi-Fi for remote monitoring and alerts.
- **Advanced Insulation:** Use better materials to improve energy efficiency.
- **Water Filtration:** Add modules for water filtration and storage.