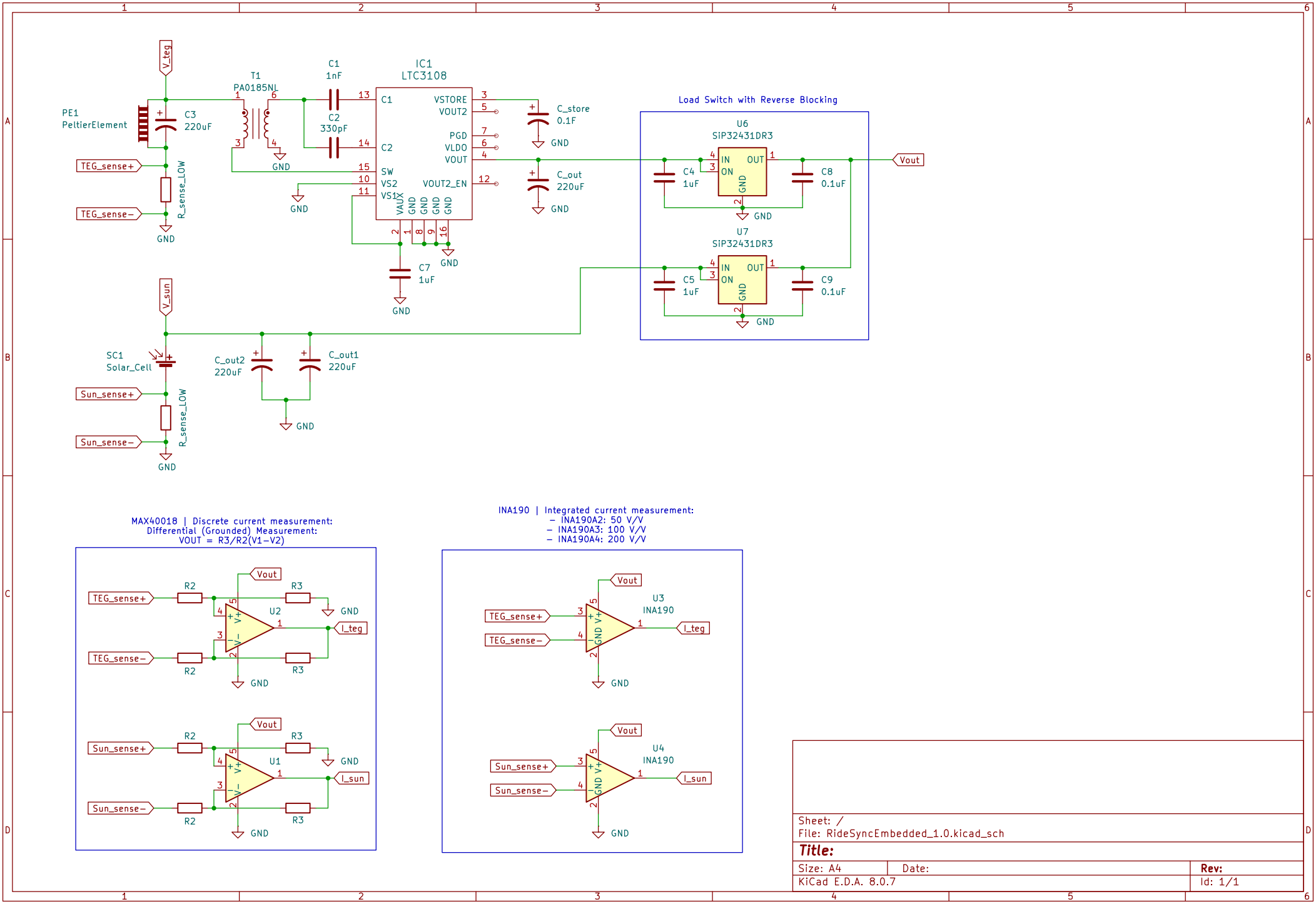
V_teg
PE1
PeltierElement
C3
220uF
TEG_sense+
TEG_sense−
R_sense_LOW
GND
T1
PA0185NL
C1
1nF
C2
330pF
IC1
LTC3108
C1
C2
SW
VS2
VS1
VAUX
VSTORE
VOUT2
PGD
VLDO
VOUT
VOUT2_EN
C_store
0.1F
C_out
220uF
C7
1uF
Load Switch with Reverse Blocking
U6
SiP32431DR3
IN
ON
OUT
GND
C4
1uF
C8
0.1uF
Vout
U7
SiP32431DR3
C5
1uF
C9
0.1uF
V_sun
SC1
Solar_Cell
C_out2
220uF
C_out1
220uF
Sun_sense+
Sun_sense−
MAX40018 | Discrete current measurement:
Differential (Grounded) Measurement:
VOUT = R3/R2(V1−V2)
R2
R3
U2
I_teg
U1
I_sun
INA190 | Integrated current measurement:
− INA190A2: 50 V/V
− INA190A3: 100 V/V
− INA190A4: 200 V/V
U3
INA190
U4
INA190
Sheet: /
File: RideSyncEmbedded_1.0.kicad_sch
Title:
Size: A4
Date:
Rev:
KiCad E.D.A. 8.0.7
Id: 1/1