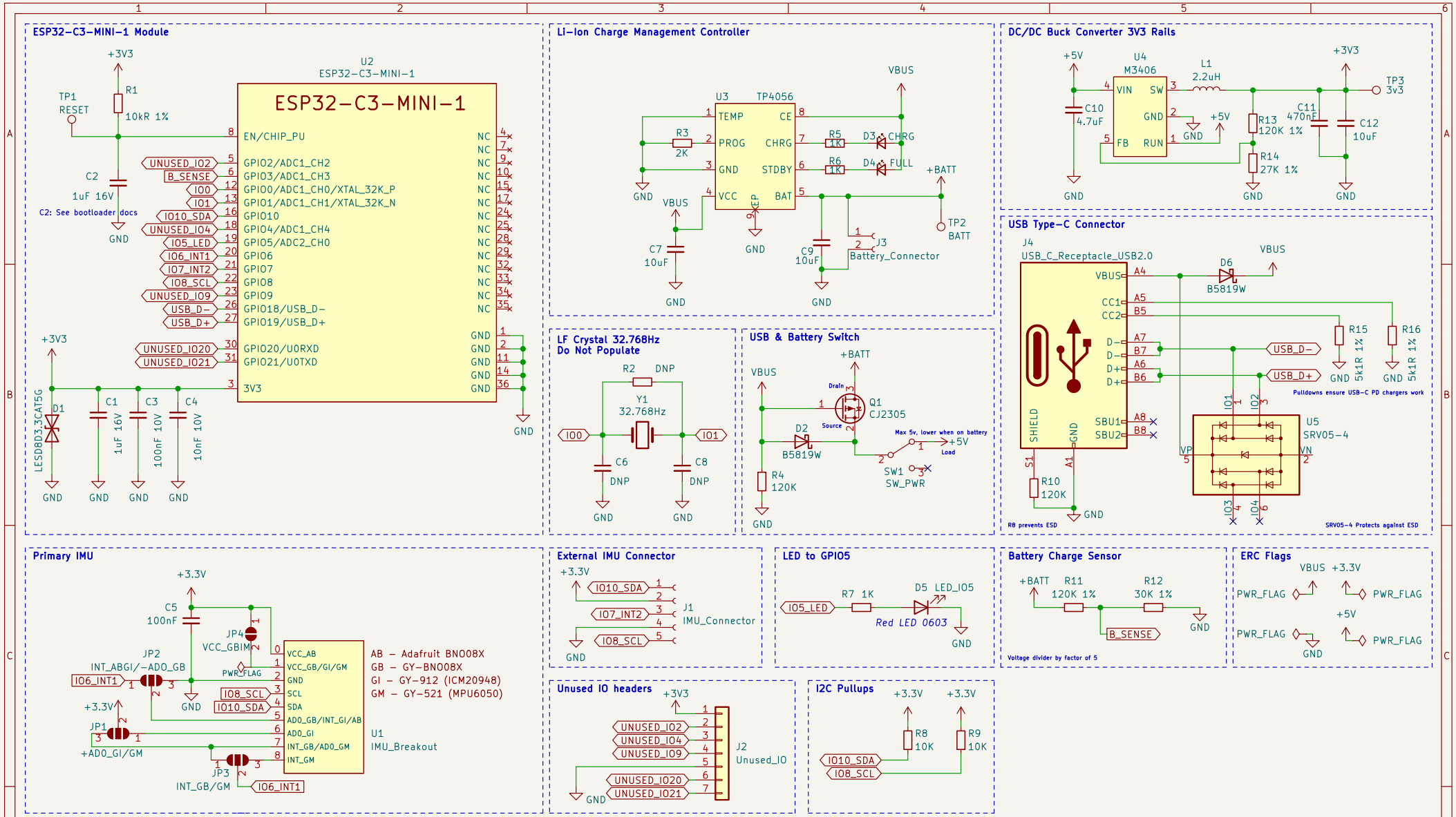
ESP32-C3-MINI-1 Module
U2
ESP32-C3-MINI-1
ESP32-C3-MINI-1
EN/CHIP_PU
GPIO2/ADC1_CH2
GPIO3/ADC1_CH3
GPIO0/ADC1_CH0/XTAL_32K_P
GPIO1/ADC1_CH1/XTAL_32K_N
GPIO10
GPIO4/ADC1_CH4
GPIO5/ADC2_CH0
GPIO6
GPIO7
GPIO8
GPIO9
GPIO18/USB_D-
GPIO19/USB_D+
GPIO20/U0RXD
GPIO21/U0TXD
3V3
TP1
RESET
R1
10kR 1%
C2
1uF 16V
C2: See bootloader docs
UNUSED_IO2
B_SENSE
IO0
IO1
IO10_SDA
UNUSED_IO4
IO5_LED
IO6_INT1
IO7_INT2
IO8_SCL
UNUSED_IO9
USB_D-
USB_D+
UNUSED_IO20
UNUSED_IO21
D1
LESD8D3.3CAT5G
C1
1uF 16V
C3
100nF 10V
C4
10nF 10V
Li-Ion Charge Management Controller
U3
TP4056
TEMP
PROG
GND
VCC
CE
CHRG
STDBY
BAT
R3
2K
R5
1K
R6
1K
D3
CHRG
D4
FULL
VBUS
+BATT
TP2
BATT
C7
10uF
C9
10uF
J3
Battery_Connector
DC/DC Buck Converter 3V3 Rails
U4
M3406
VIN
SW
GND
FB
RUN
+5V
C10
4.7uF
L1
2.2uH
R13
120K 1%
R14
27K 1%
C11
470nF
C12
10uF
+3V3
TP3
3v3
USB Type-C Connector
J4
USB_C_Receptacle_USB2.0
VBUS
CC1
CC2
D-
D+
SBU1
SBU2
SHIELD
D6
B5819W
R15
5k1R 1%
R16
5k1R 1%
Pulldowns ensure USB-C PD chargers work
U5
SRV05-4
VP
VN
R10
120K
R8 prevents ESD
SRV05-4 Protects against ESD
LF Crystal 32.768Hz
Do Not Populate
R2
DNP
Y1
32.768Hz
C6
DNP
C8
DNP
USB & Battery Switch
Q1
CJ2305
Drain
Source
D2
B5819W
R4
120K
SW1
SW_PWR
Max 5v, lower when on battery
Load
Primary IMU
C5
100nF
JP4
VCC_GBIM
JP2
INT_ABGI/-ADO_GB
PWR_FLAG
JP1
+ADO_GI/GM
JP3
INT_GB/GM
VCC_AB
VCC_GB/GI/GM
SCL
SDA
ADO_GB/INT_GI/AB
ADO_GI
INT_GB/ADO_GM
INT_GM
AB - Adafruit BNO08X
GB - GY-BNO08X
GI - GY-912 (ICM20948)
GM - GY-521 (MPU6050)
U1
IMU_Breakout
External IMU Connector
J1
IMU_Connector
LED to GPIO5
R7 1K
D5 LED_IO5
Red LED 0603
Battery Charge Sensor
R11
120K 1%
R12
30K 1%
Voltage divider by factor of 5
ERC Flags
PWR_FLAG
Unused IO headers
J2
Unused_IO
I2C Pullups
R8
10K
R9
10K
For use with SlimeVR and made with <3
Licensed under CERN-OHL-P v2 or later
github.com/thebutlah/slimevr_pcb
Sheet: /
File: ferrous_slime.kicad_sch
Title: ferrous_slime
Size: A4
Date: 2023-01-10
Rev: v0.4.0
KiCad E.D.A. kicad (6.0.2)
Id: 1/1