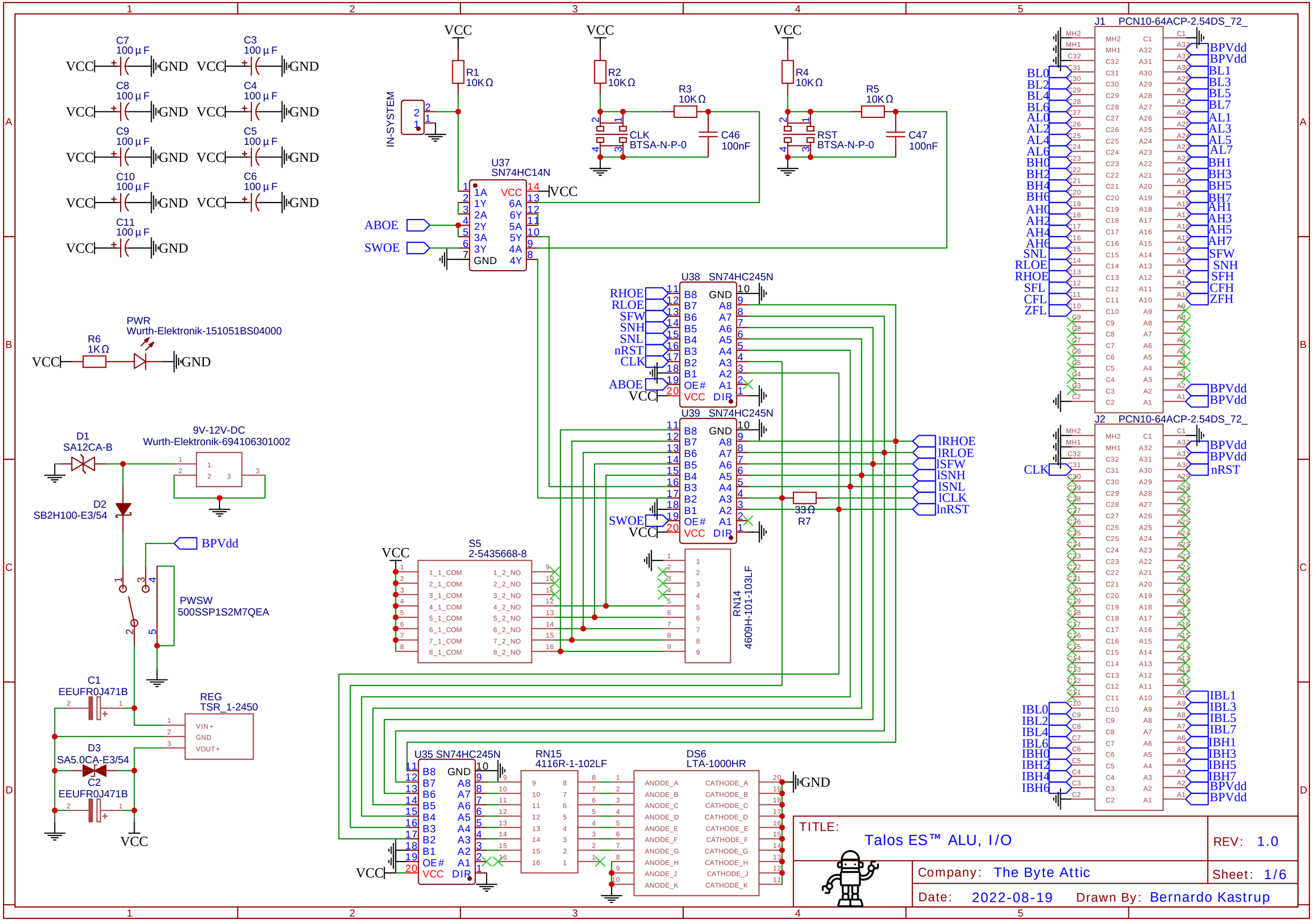
C7 100µF
C3 100µF
C8 100µF
C4 100µF
C9 100µF
C5 100µF
C10 100µF
C6 100µF
C11 100µF
VCC
GND
IN-SYSTEM
R1 10KΩ
R2 10KΩ
R3 10KΩ
R4 10KΩ
R5 10KΩ
CLK BTSA-N-P-0
RST BTSA-N-P-0
C46 100nF
C47 100nF
U37 SN74HC14N
ABOE
SWOE
U38 SN74HC245N
U39 SN74HC245N
RHOE
RLOE
SFW
SNH
SNL
nRST
CLK
lRHOE
lRLOE
lSFW
lSNH
lSNL
lCLK
lnRST
33Ω R7
S5 2-5435668-8
RN14 4609H-101-103LF
PWR Wurth-Elektronik-151051BS04000
R6 1KΩ
D1 SA12CA-B
9V-12V-DC Wurth-Elektronik-694106301002
D2 SB2H100-E3/54
BPVdd
PWSW 500SSP1S2M7QEA
C1 EEUFR0J471B
REG TSR_1-2450
VIN+
GND
VOUT+
D3 SA5.0CA-E3/54
C2 EEUFR0J471B
U35 SN74HC245N
RN15 4116R-1-102LF
DS6 LTA-1000HR
ANODE_A
ANODE_B
ANODE_C
ANODE_D
ANODE_E
ANODE_F
ANODE_G
ANODE_H
ANODE_J
ANODE_K
CATHODE_A
CATHODE_B
CATHODE_C
CATHODE_D
CATHODE_E
CATHODE_F
CATHODE_G
CATHODE_H
CATHODE_J
CATHODE_K
J1 PCN10-64ACP-2.54DS_72_
J2 PCN10-64ACP-2.54DS_72_
BL0
BL2
BL4
BL6
AL0
AL2
AL4
AL6
BH0
BH2
BH4
BH6
AH0
AH2
AH4
AH6
SNL
RLOE
RHOE
SFL
CFL
ZFL
BPVdd
BL1
BL3
BL5
BL7
AL1
AL3
AL5
AL7
BH1
BH3
BH5
BH7
AH1
AH3
AH5
AH7
SFW
SNH
SFH
CFH
ZFH
CLK
nRST
IBL0
IBL2
IBL4
IBL6
IBH0
IBH2
IBH4
IBH6
IBL1
IBL3
IBL5
IBL7
IBH1
IBH3
IBH5
IBH7
TITLE:
Talos ES™ ALU, I/O
REV: 1.0
Company: The Byte Attic
Sheet: 1/6
Date: 2022-08-19
Drawn By: Bernardo Kastrup

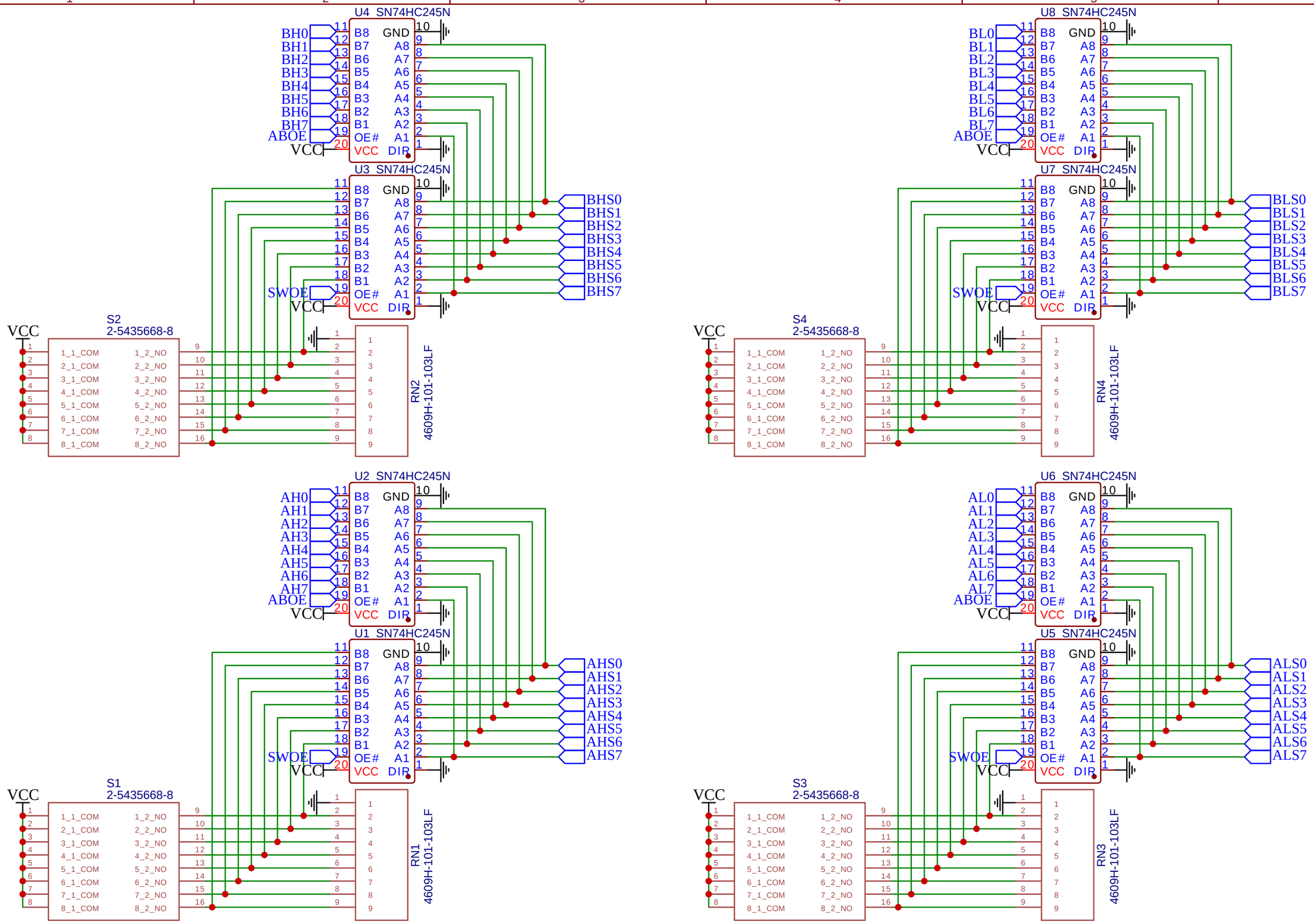

TITLE: Talos ES™ ALU, operand section

REV: 1.0

Company: The Byte Attic

Sheet: 2/6

Date: 2022-08-19

Drawn By: bkastrup

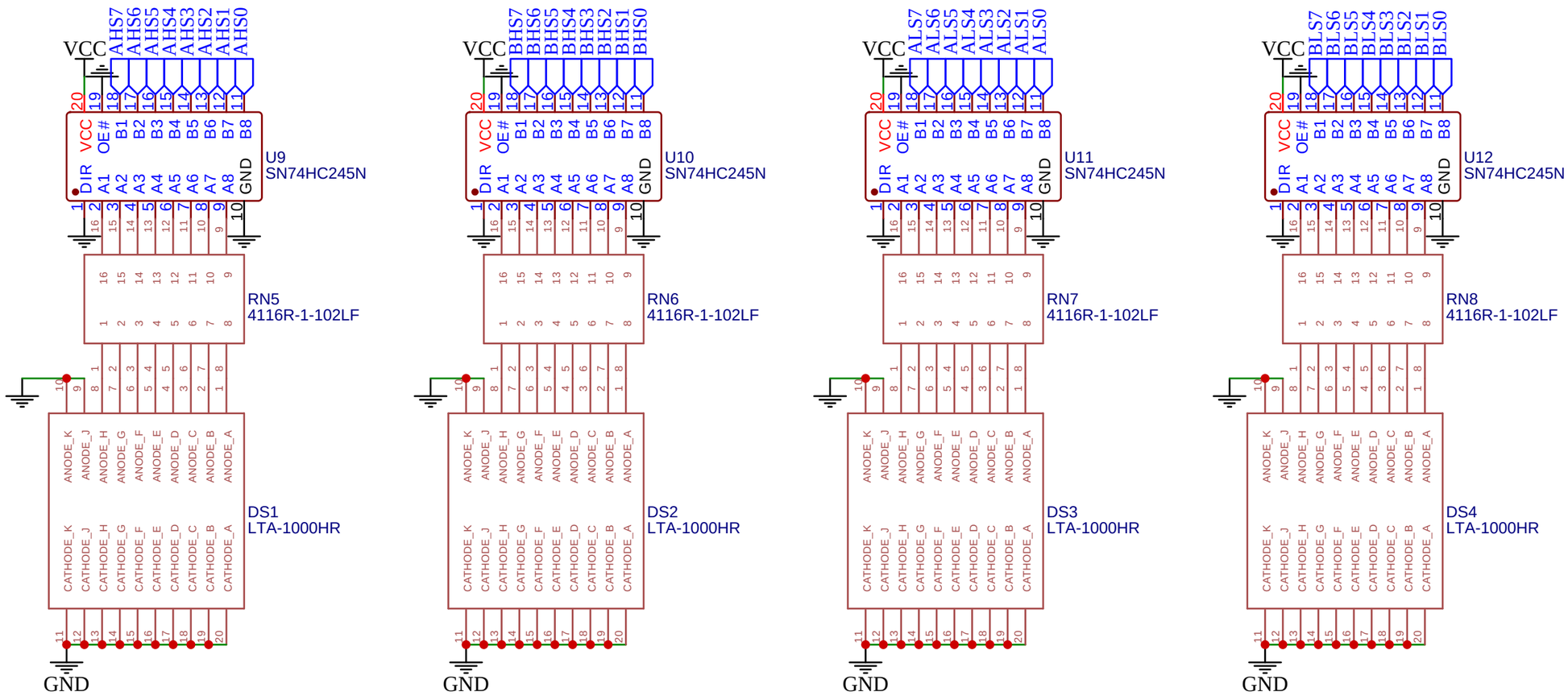

TITLE: Talos ES™ ALU, indicator section

REV: 1.0

Company: The Byte Attic

Sheet: 3/6

Date: 2022-08-19

Drawn By: Bernardo Kastrup

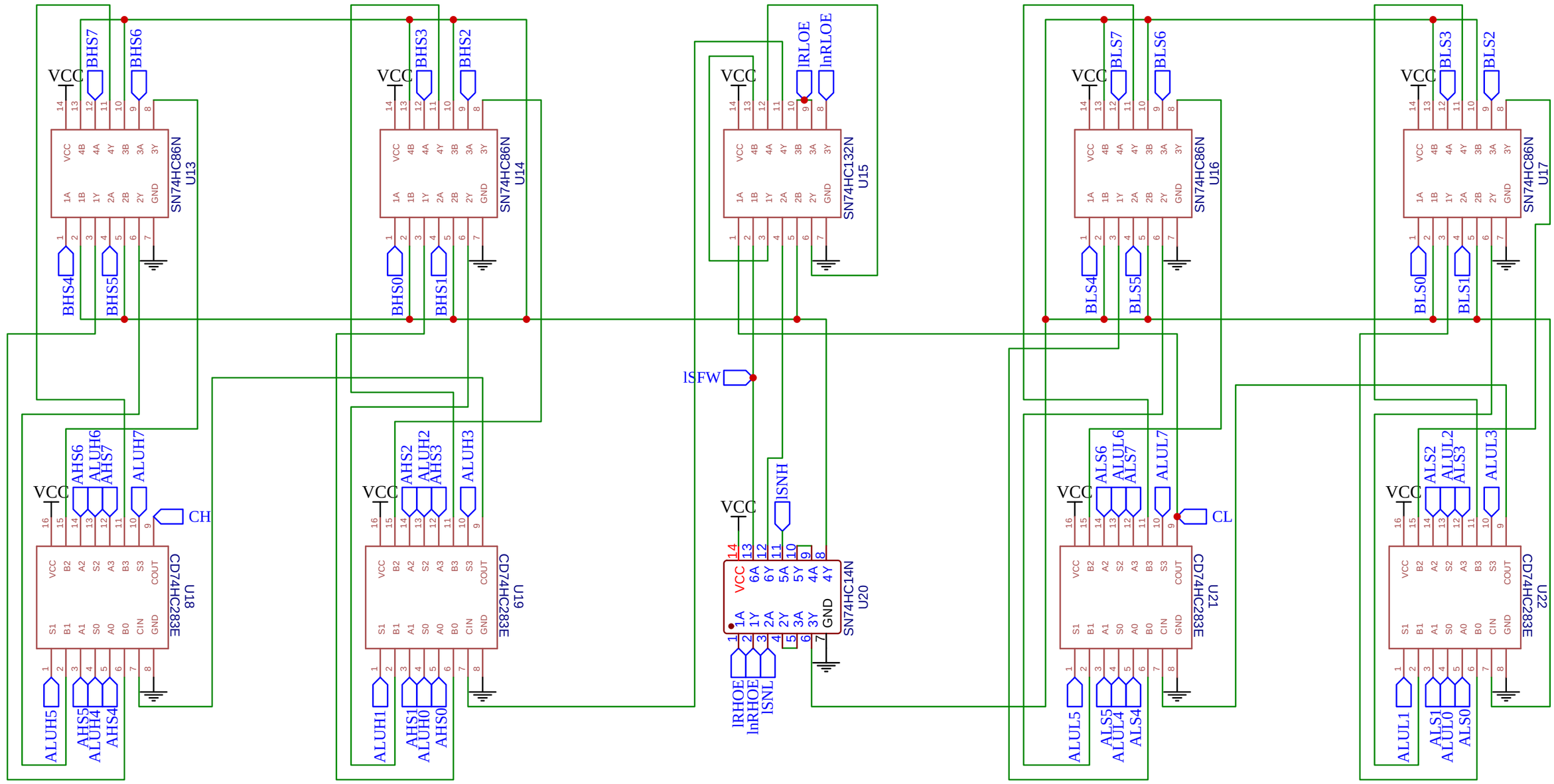

TITLE: Talos ES™ ALU, main arithmetic logic

REV: 1.0

Company: The Byte Attic

Sheet: 4/6

Date: 2022-08-19

Drawn By: Bernardo Kastrup

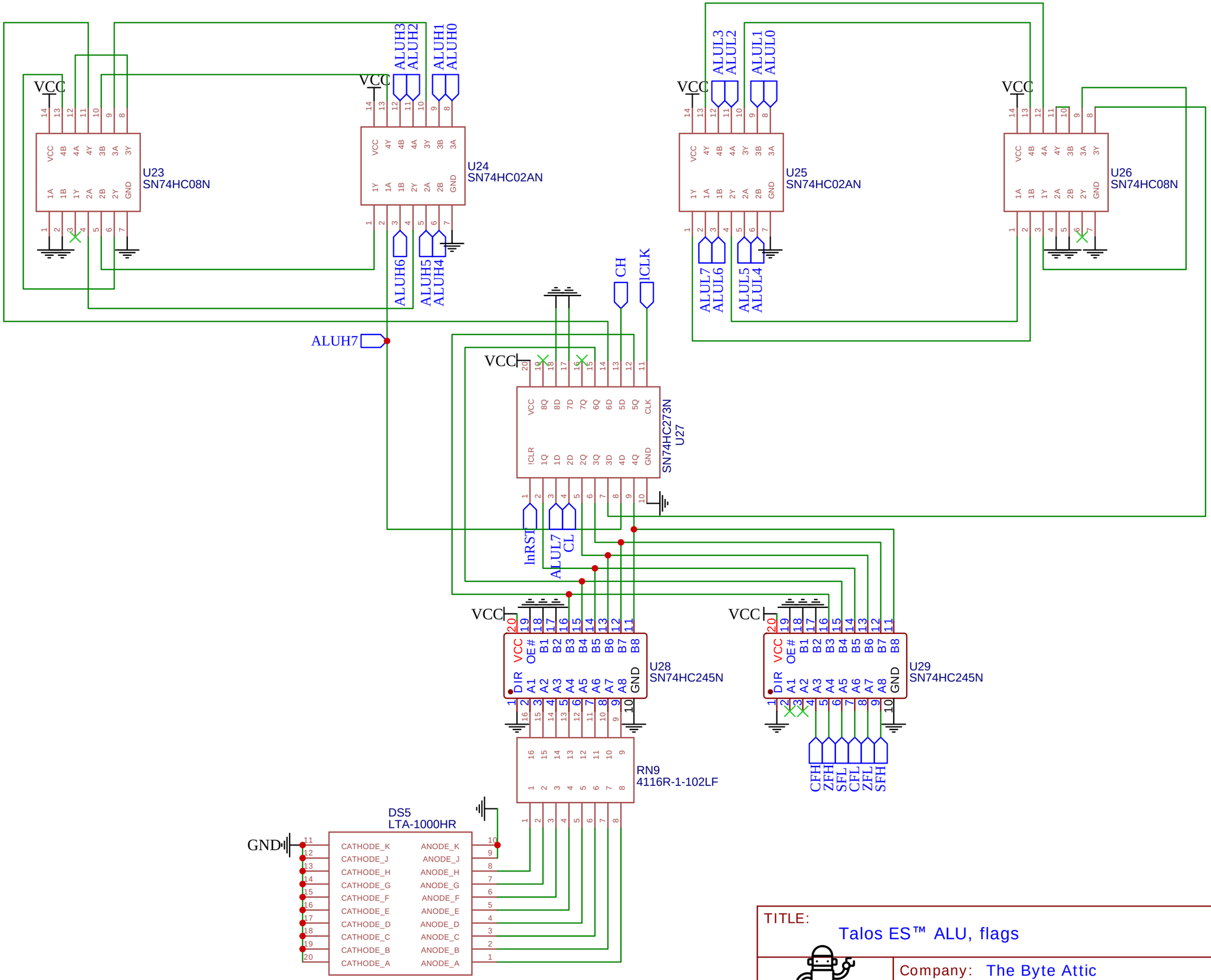

TITLE: Talos ES™ ALU, flags

REV: 1.0

Company: The Byte Attic

Sheet: 5/6

Date: 2022-08-19

Drawn By: Bernardo Kastrup

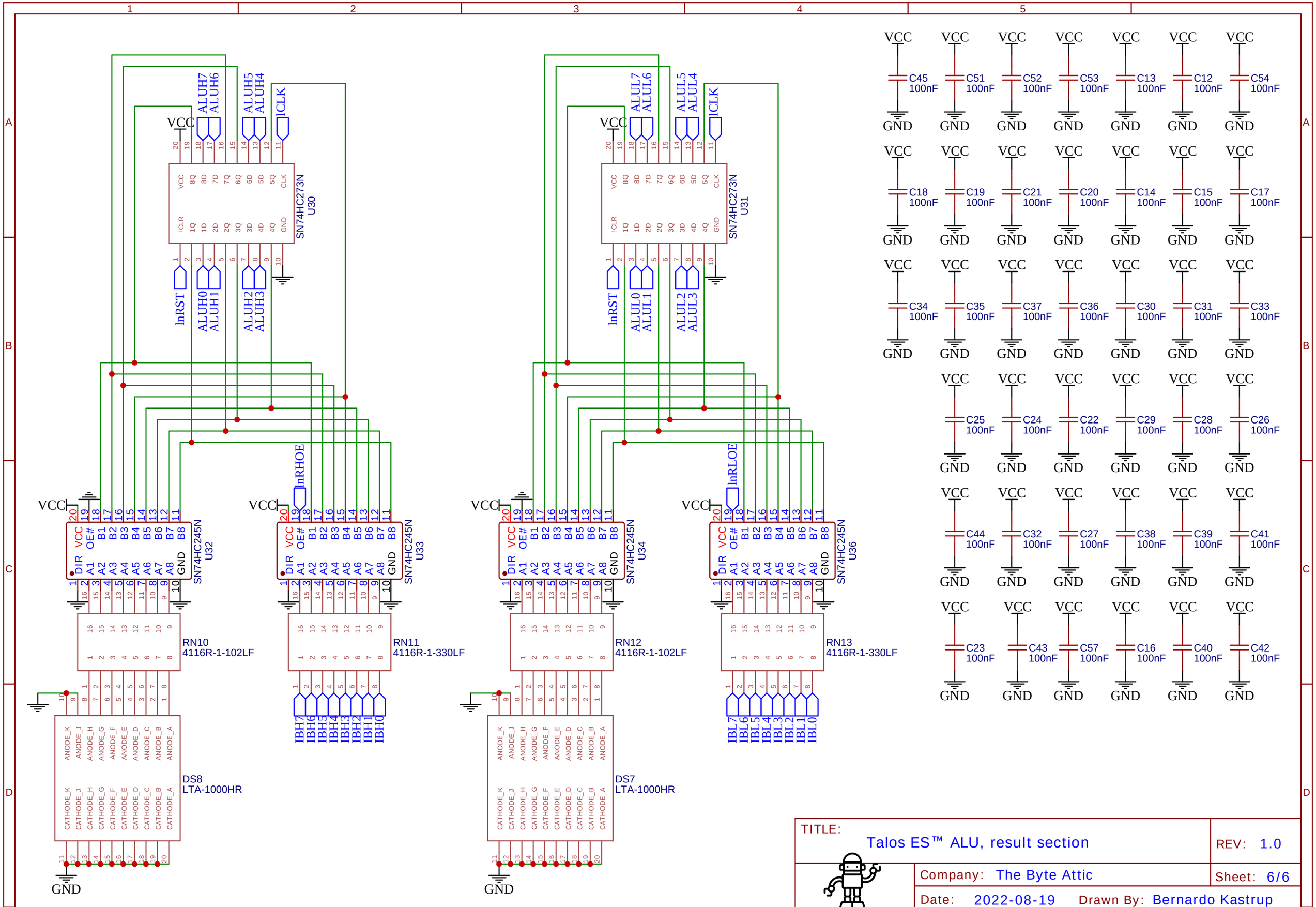

TITLE: Talos ES™ ALU, result section

REV: 1.0

Company: The Byte Attic

Sheet: 6/6

Date: 2022-08-19

Drawn By: Bernardo Kastrup