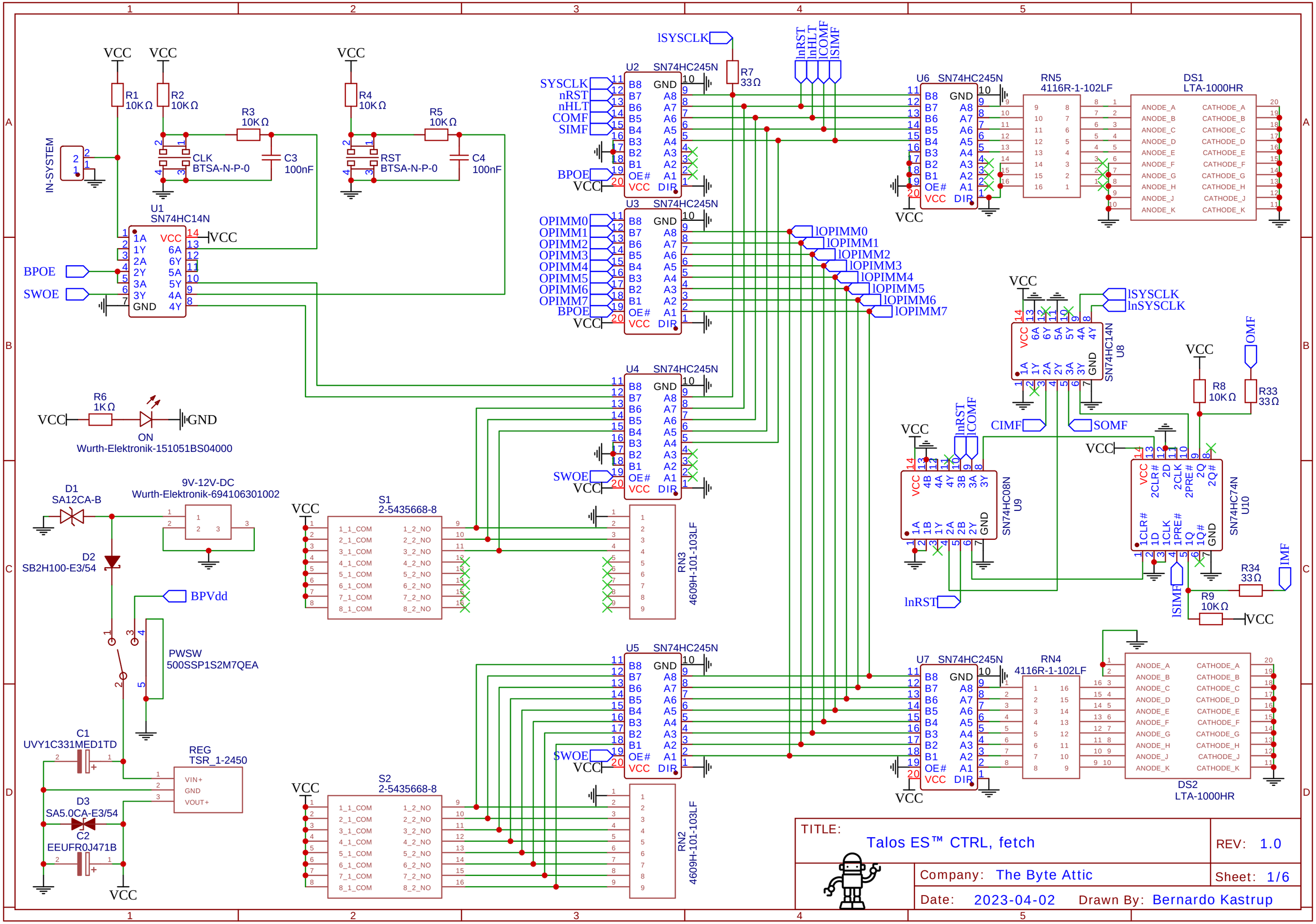

TITLE: Talos ES™ CTRL, fetch

REV: 1.0

Company: The Byte Attic

Sheet: 1/6

Date: 2023-04-02

Drawn By: Bernardo Kastrup

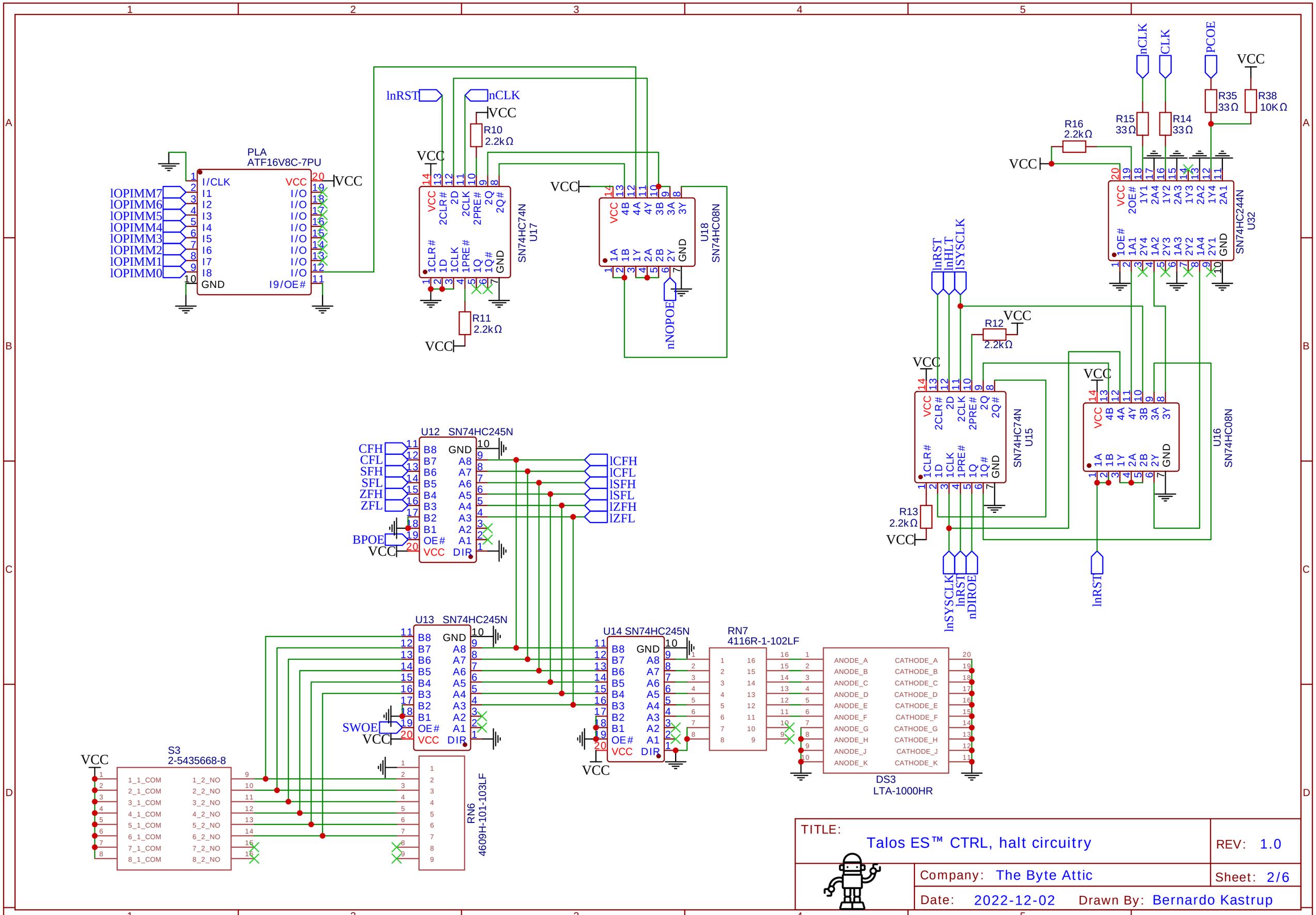

TITLE: Talos ES™ CTRL, halt circuitry

REV: 1.0

Company: The Byte Attic

Sheet: 2/6

Date: 2022-12-02

Drawn By: Bernardo Kastrup

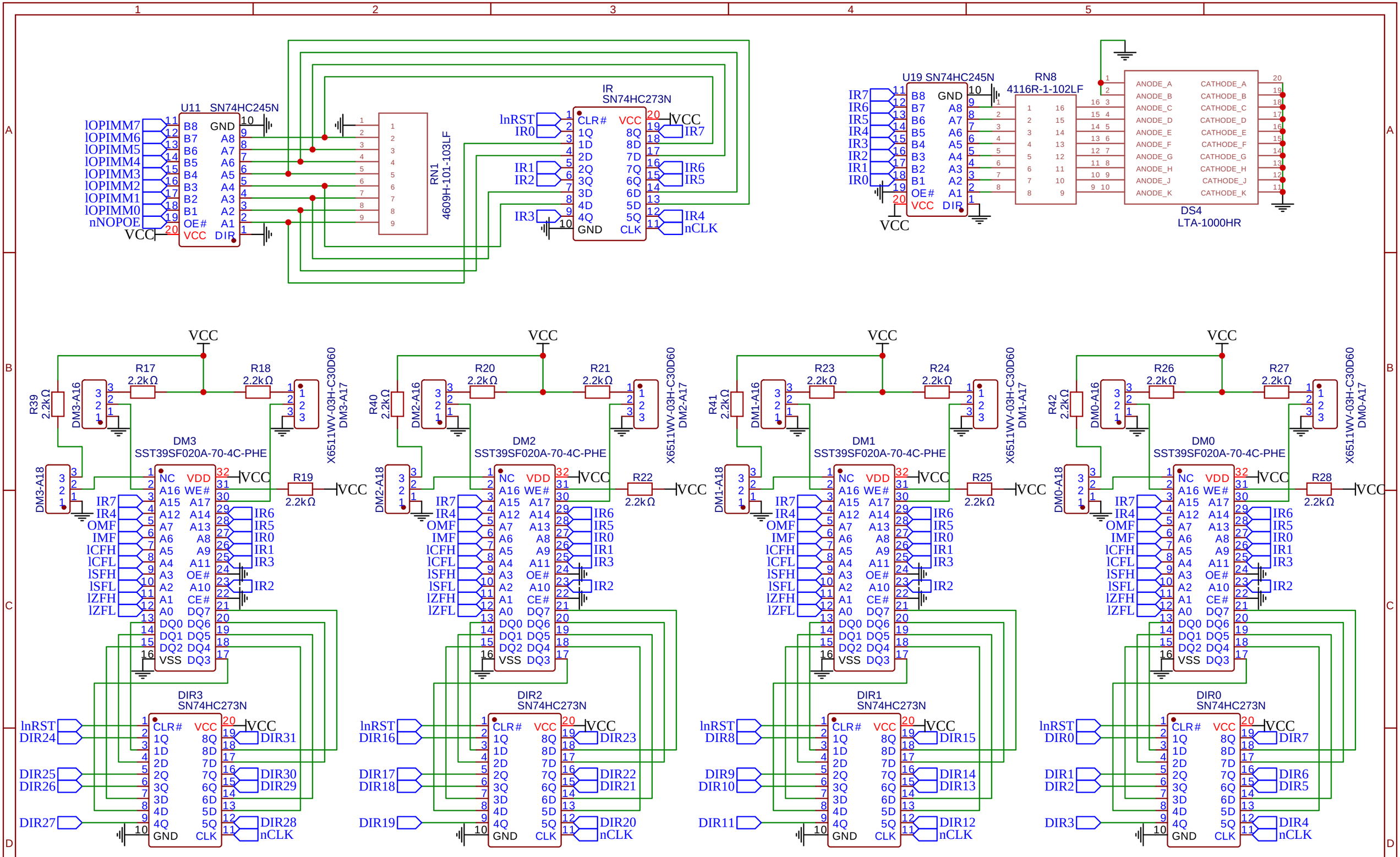

TITLE: Talos ES™ CTRL, decode

REV: 1.0

Company: The Byte Attic

Sheet: 3/6

Date: 2022-12-02

Drawn By: Bernardo Kastrup

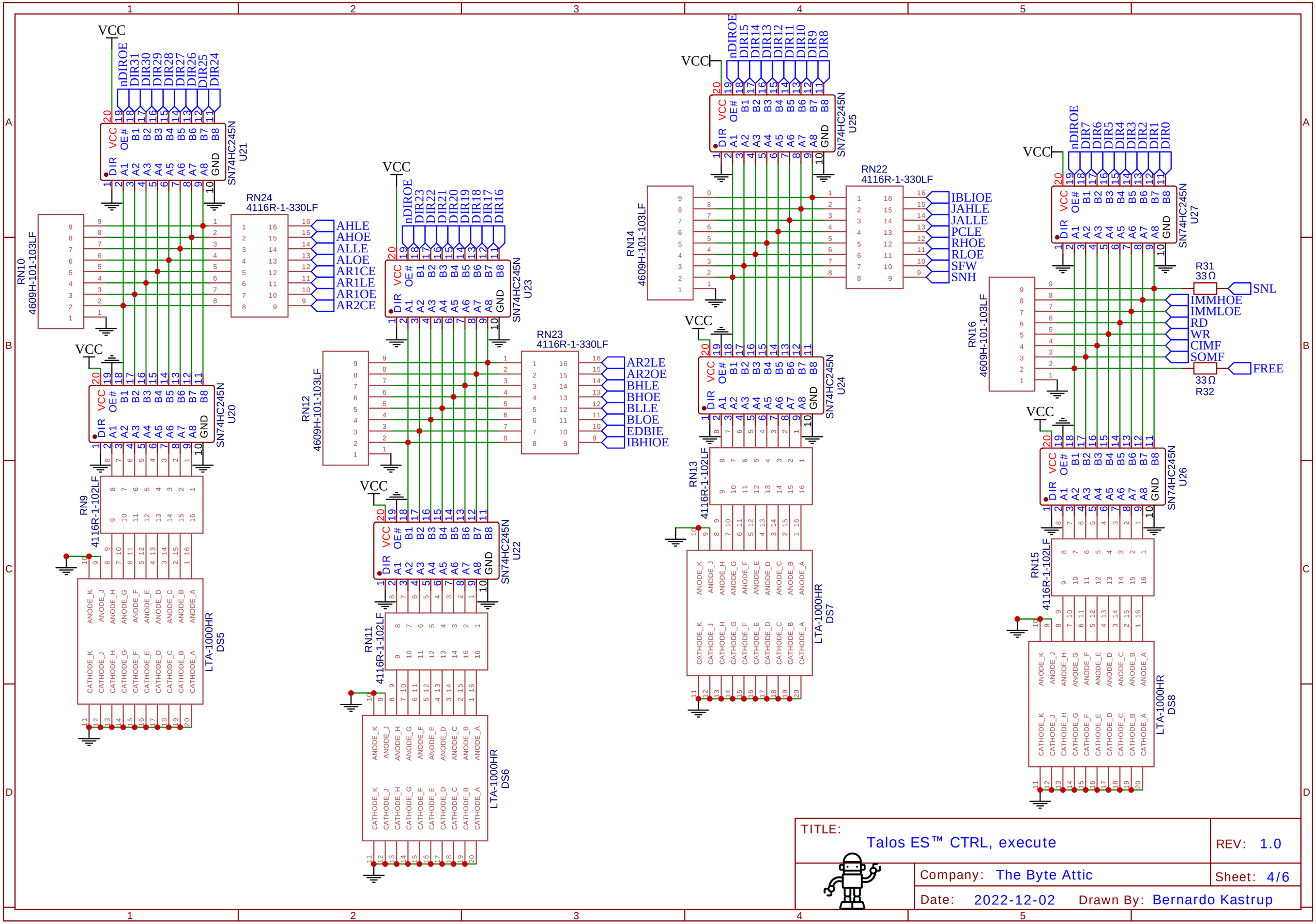
VCC
nDIROE
DIR31 DIR30 DIR29 DIR28 DIR27 DIR26 DIR25 DIR24
SN74HC245N U21
RN10 4609H-101-103LF
RN24 4116R-1-330LF
AHLE AHOE ALLE ALOE AR1CE AR1LE AR1OE AR2CE
SN74HC245N U20
RN9 4116R-1-102LF
LTA-1000HR DS5
DIR23 DIR22 DIR21 DIR20 DIR19 DIR18 DIR17 DIR16
SN74HC245N U23
RN12 4609H-101-103LF
RN23 4116R-1-330LF
AR2LE AR2OE BHLE BHOE BLLE BLOE EDBIE IBHIOE
SN74HC245N U22
RN11 4116R-1-102LF
LTA-1000HR DS6
DIR15 DIR14 DIR13 DIR12 DIR11 DIR10 DIR9 DIR8
SN74HC245N U25
RN14 4609H-101-103LF
RN22 4116R-1-330LF
IBLIOE JAHLE JALLE PCLE RHOE RLOE SFW SNH
SN74HC245N U24
RN13 4116R-1-102LF
LTA-1000HR DS7
DIR7 DIR6 DIR5 DIR4 DIR3 DIR2 DIR1 DIR0
SN74HC245N U27
RN16 4609H-101-103LF
R31 33Ω
SNL
IMMHOE IMMLOE RD WR CIMF SOMF
FREE
33Ω R32
SN74HC245N U26
RN15 4116R-1-102LF
LTA-1000HR DS8
TITLE:
Talos ES™ CTRL, execute
REV: 1.0
Company: The Byte Attic
Sheet: 4/6
Date: 2022-12-02
Drawn By: Bernardo Kastrup

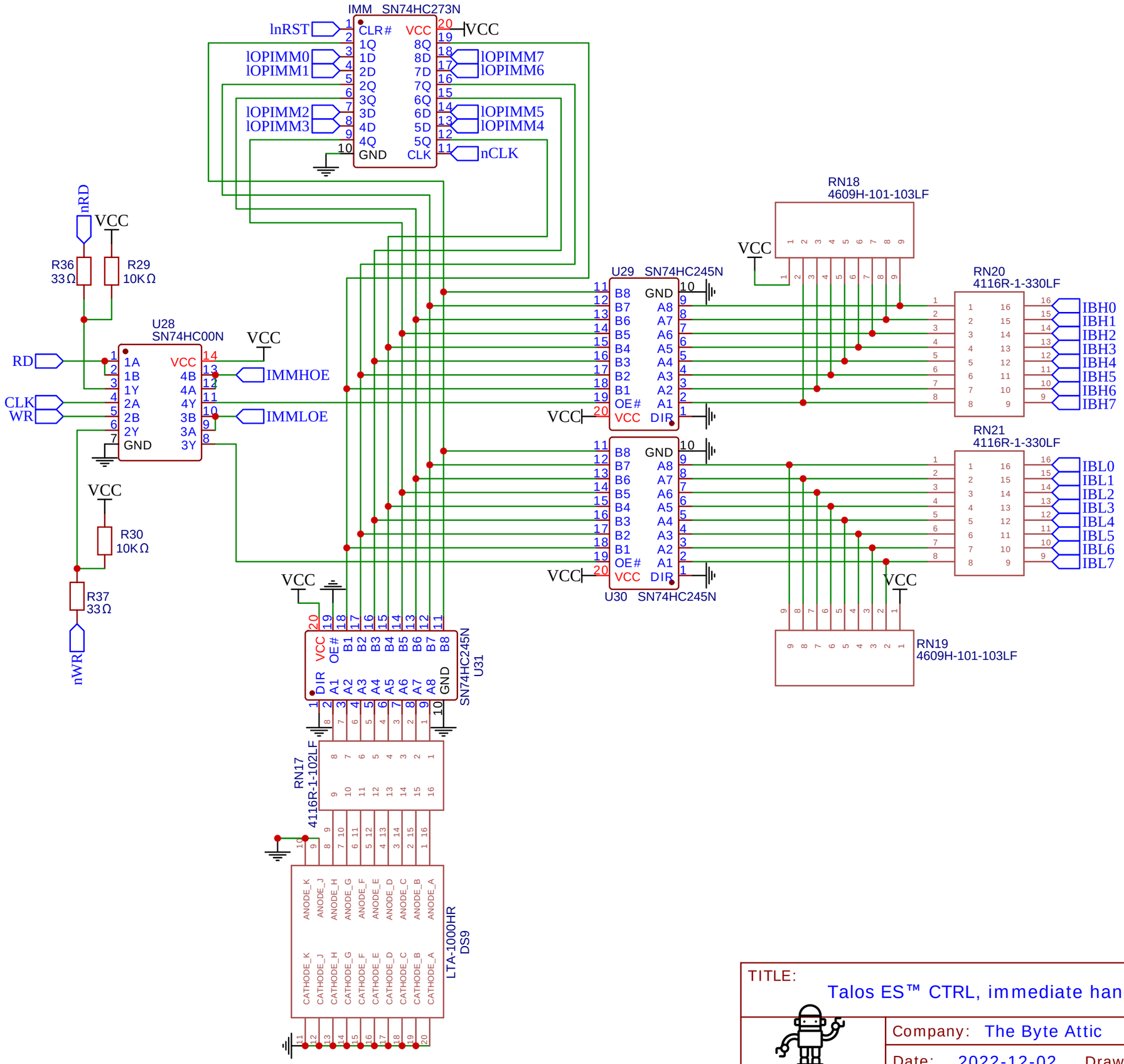

TITLE: Talos ES™ CTRL, immediate handling

REV: 1.0

Company: The Byte Attic

Sheet: 5/6

Date: 2022-12-02

Drawn By: Bernardo Kastrup

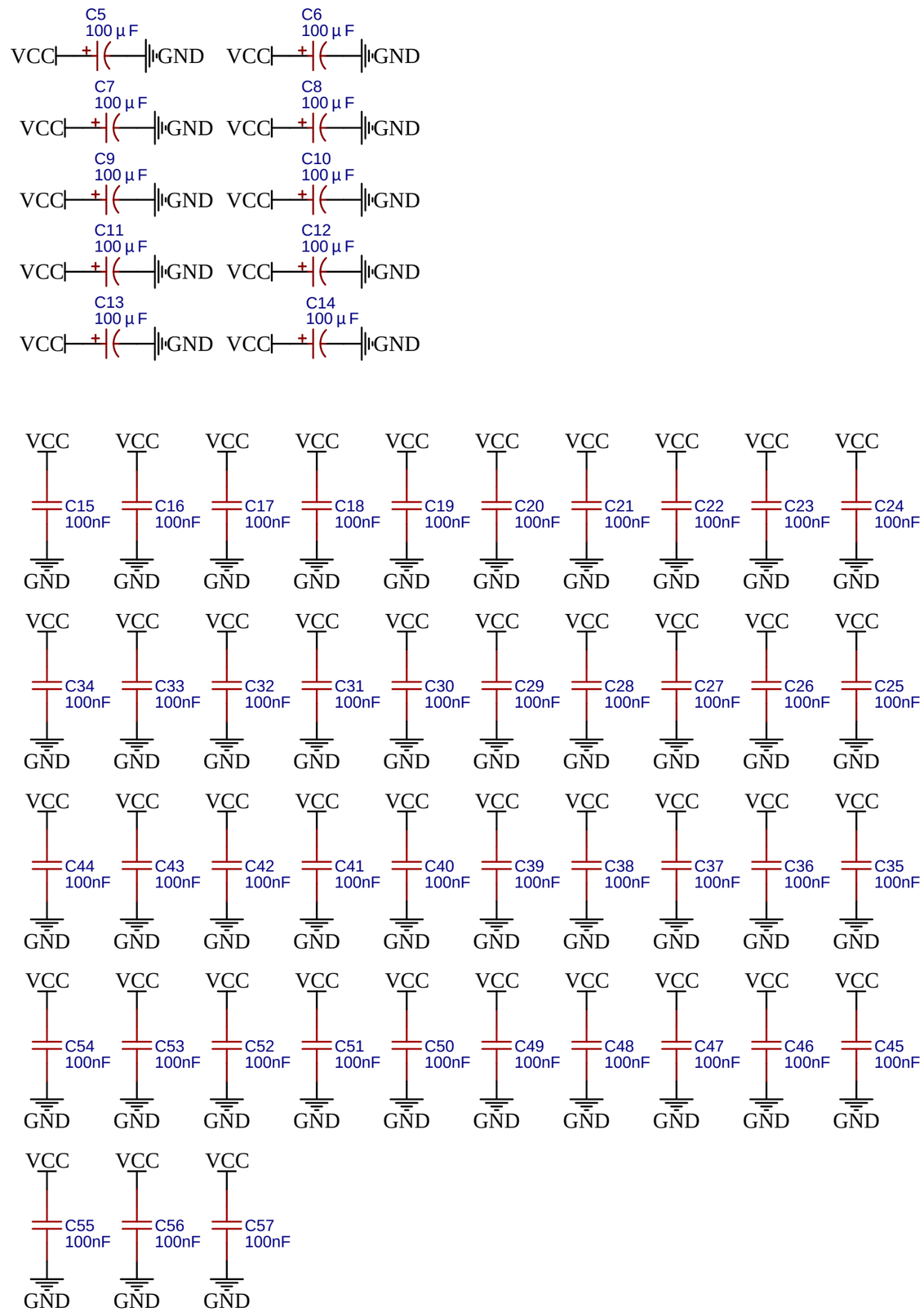

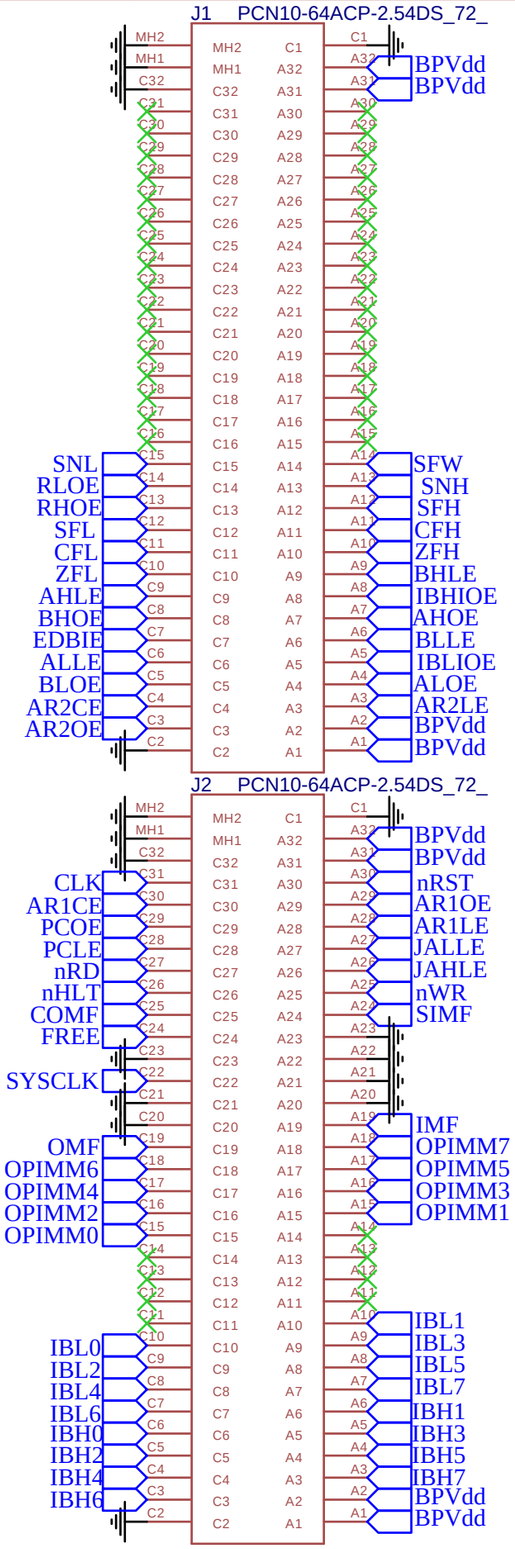

TITLE: Talos ES™ CTRL, I/Os	REV: 1.0
Company: The Byte Attic	Sheet: 6/6
Date: 2022-12-02 Drawn By: Bernardo Kastrup	