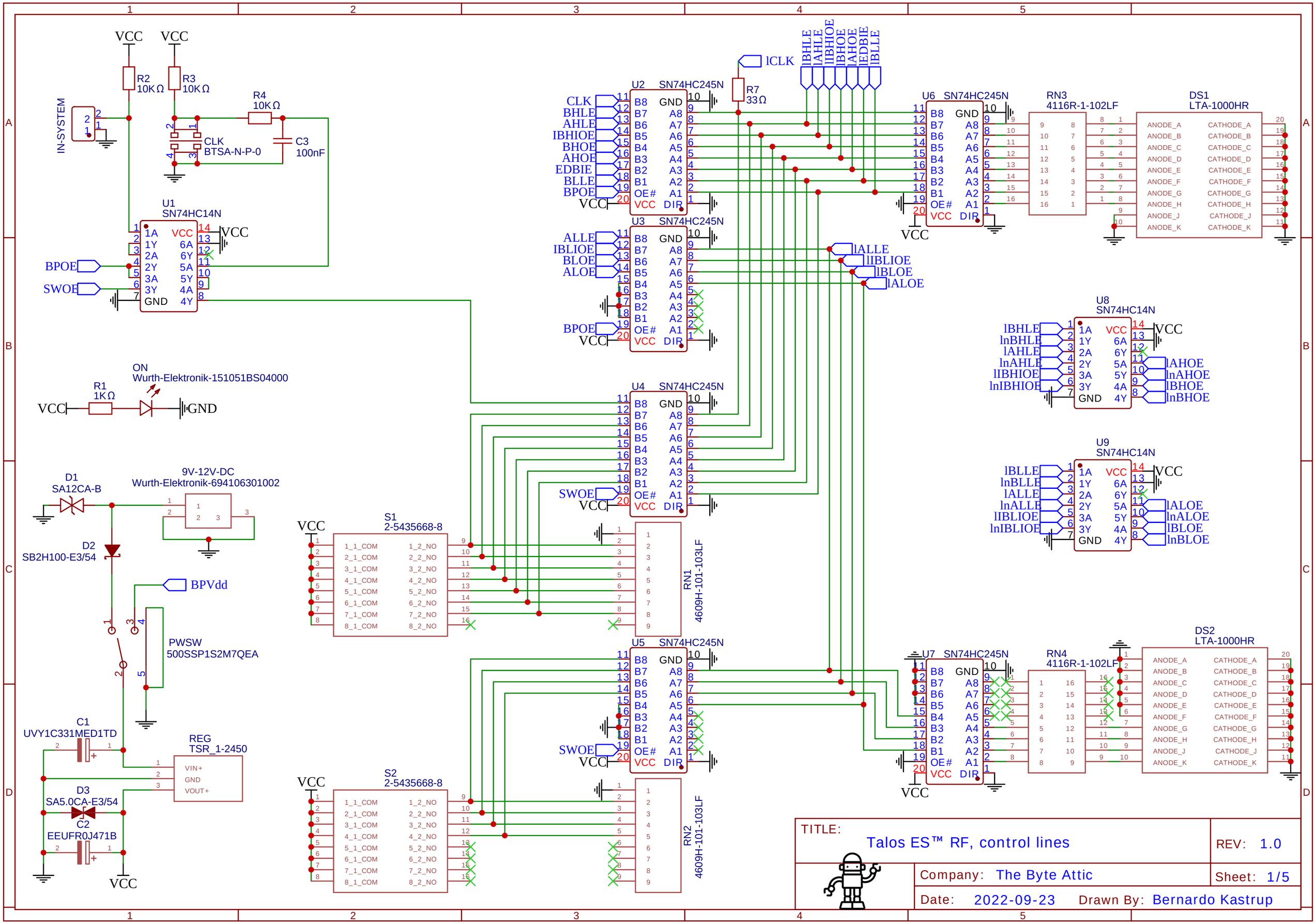
VCC
R2 10KΩ
R3 10KΩ
R4 10KΩ
C3 100nF
IN-SYSTEM
CLK BTSA-N-P-0
U1 SN74HC14N
BPOE
SWOE
ON Wurth-Elektronik-151051BS04000
R1 1KΩ
GND
D1 SA12CA-B
9V-12V-DC Wurth-Elektronik-694106301002
D2 SB2H100-E3/54
BPVdd
PWSW 500SSP1S2M7QEA
C1 UVY1C331MED1TD
REG TSR_1-2450
D3 SA5.0CA-E3/54
C2 EEUFR0J471B
U2 SN74HC245N
U3 SN74HC245N
U4 SN74HC245N
U5 SN74HC245N
U6 SN74HC245N
U7 SN74HC245N
U8 SN74HC14N
U9 SN74HC14N
R7 33Ω
lCLK
lBHLE lAHLE lBHIOE lBHOE lAHOE lEDBIE lBLLE
lALLE lBLIOE lBLOE lALOE
RN3 4116R-1-102LF
RN4 4116R-1-102LF
DS1 LTA-1000HR
DS2 LTA-1000HR
S1 2-5435668-8
S2 2-5435668-8
RN1 4609H-101-103LF
RN2 4609H-101-103LF
TITLE:
Talos ES™ RF, control lines
REV: 1.0
Company: The Byte Attic
Sheet: 1/5
Date: 2022-09-23
Drawn By: Bernardo Kastrup

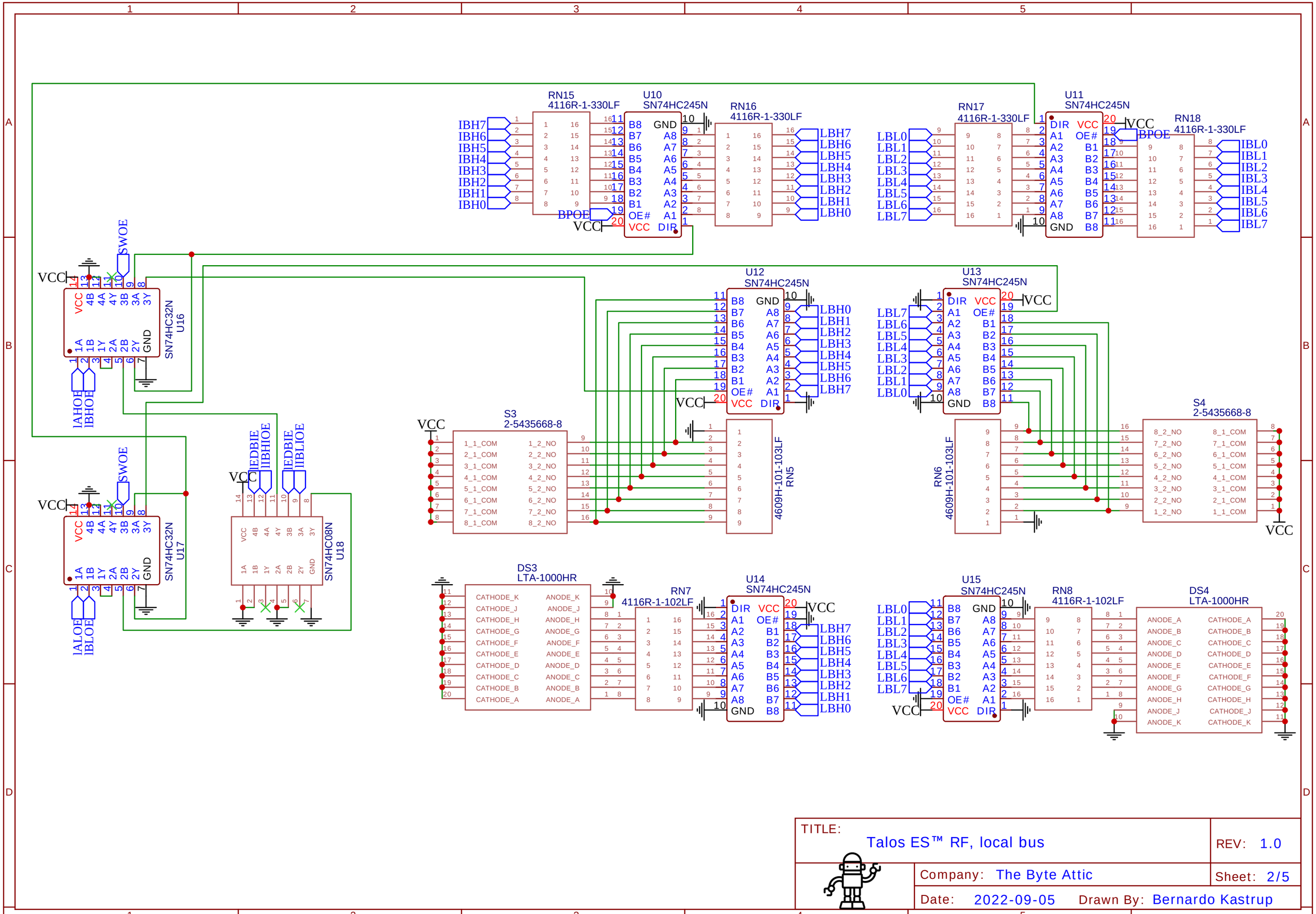

TITLE: Talos ES™ RF, local bus	REV: 1.0
Company: The Byte Attic	Sheet: 2/5
Date: 2022-09-05 Drawn By: Bernardo Kastrup	

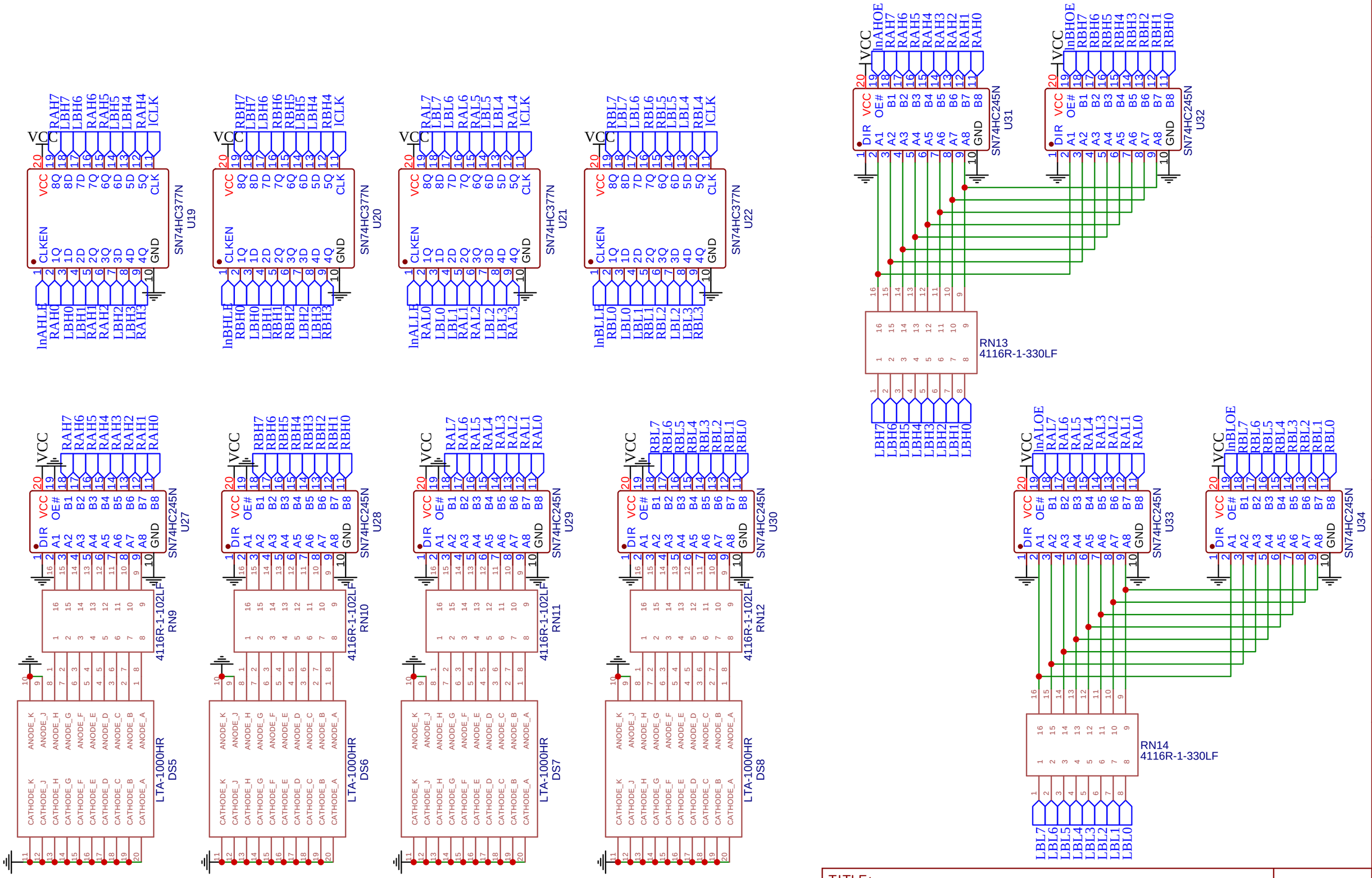

TITLE: Talos ES™ RF, registers

REV: 1.0

Company: The Byte Attic

Sheet: 3/5

Date: 2022-09-03

Drawn By: Bernardo Kastrup

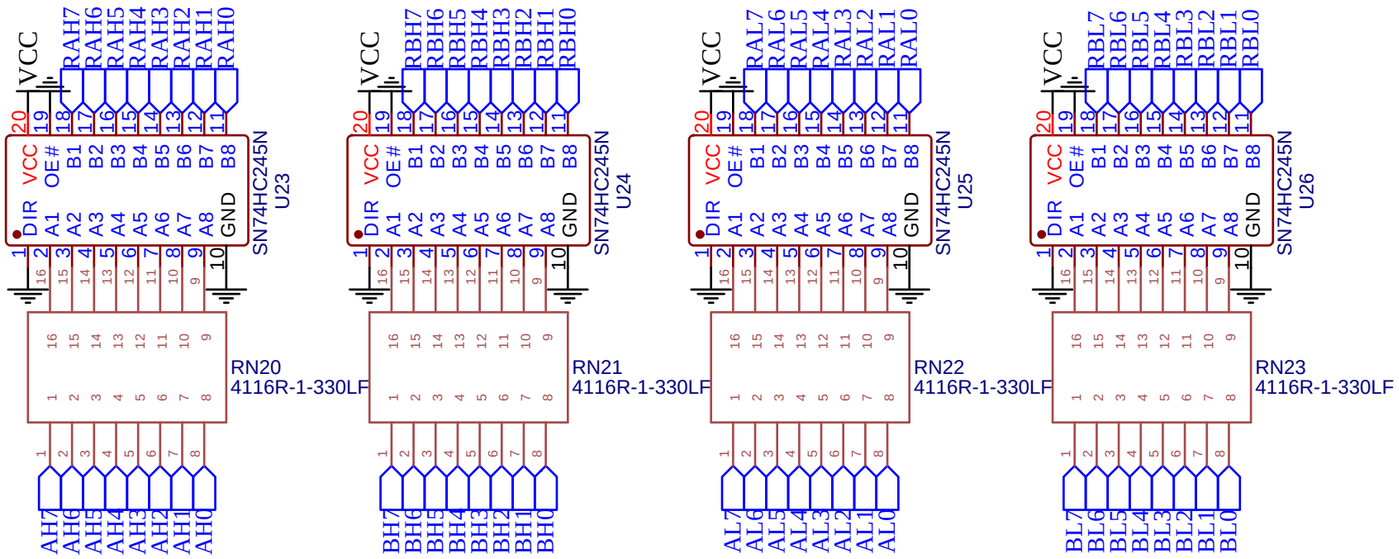

TITLE: Talos ES™ RF, registers to ALU	REV: 1.0
Company: The Byte Attic	Sheet: 4/5
Date: 2022-09-03 Drawn By: Bernardo Kastrup	

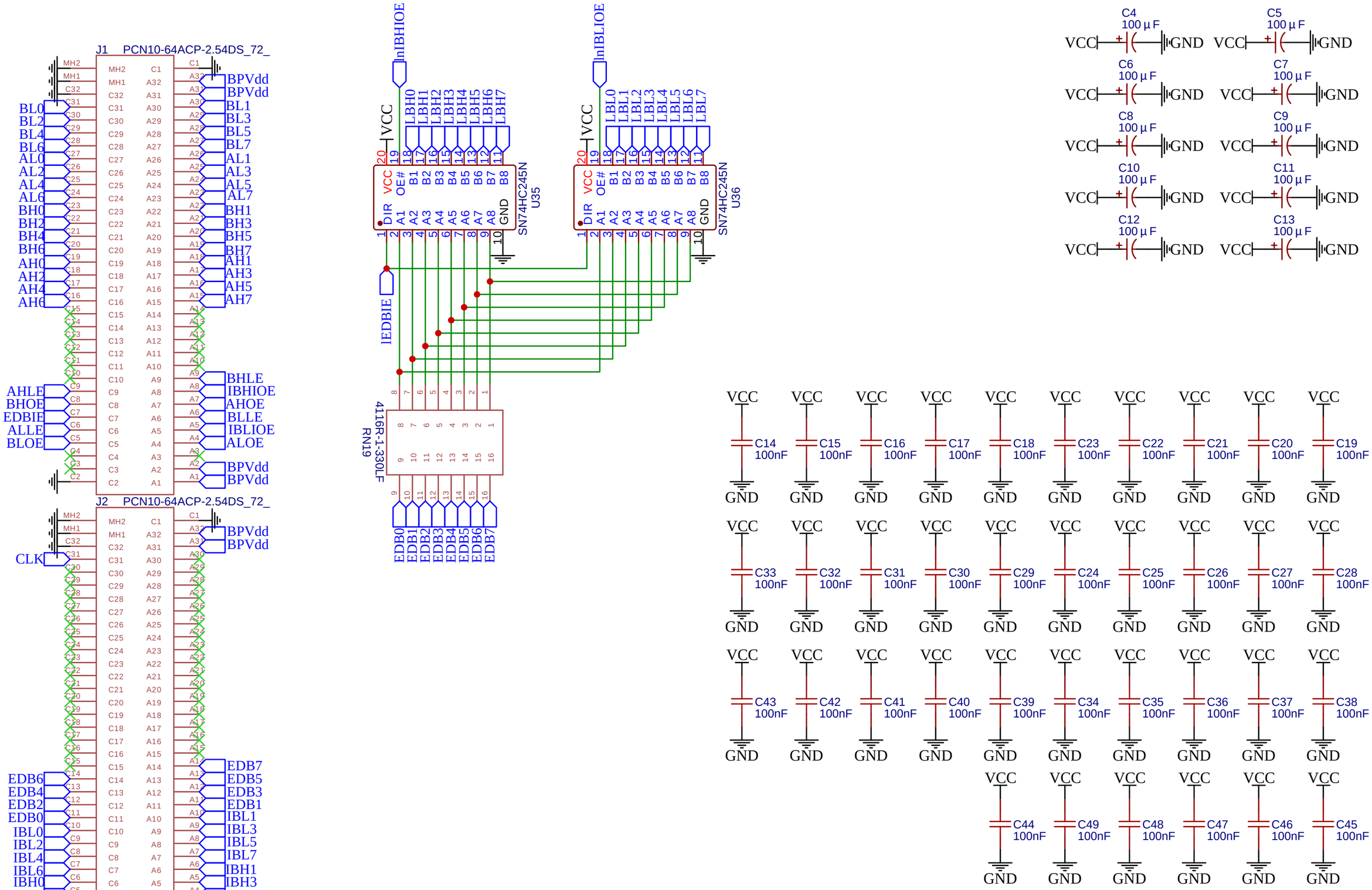

TITLE: Talos ES™ RF, I/O	REV: 1.0
Company: The Byte Attic	Sheet: 5/5
Date: 2022-09-03 Drawn By: Bernardo Kastrup	