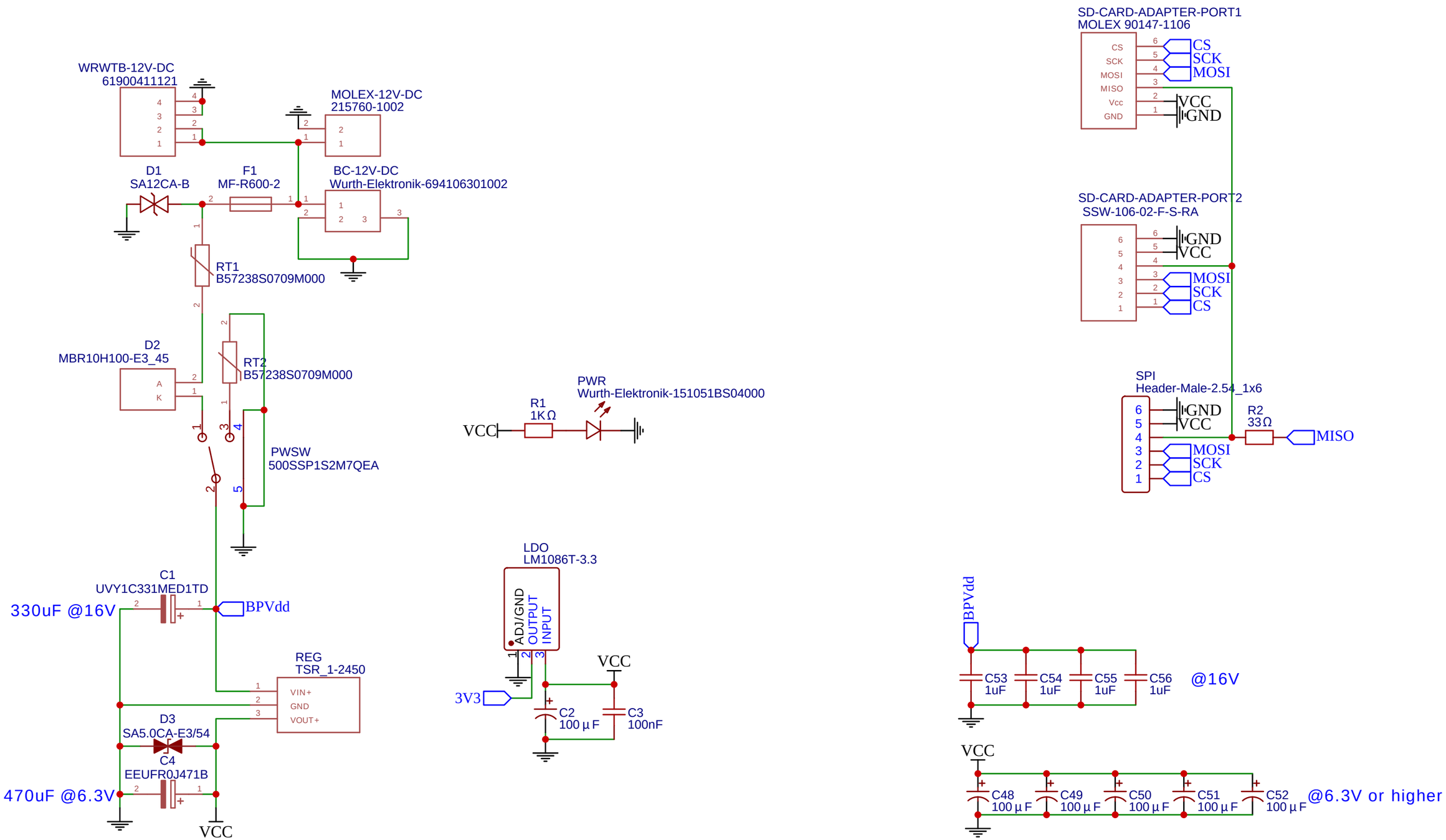

TITLE: Talos ES™ motherboard, power and uSD	REV: 1.0
Company: The Byte Attic	Sheet: 1/6
Date: 2023-02-21 Drawn By: Bernardo Kastrup	

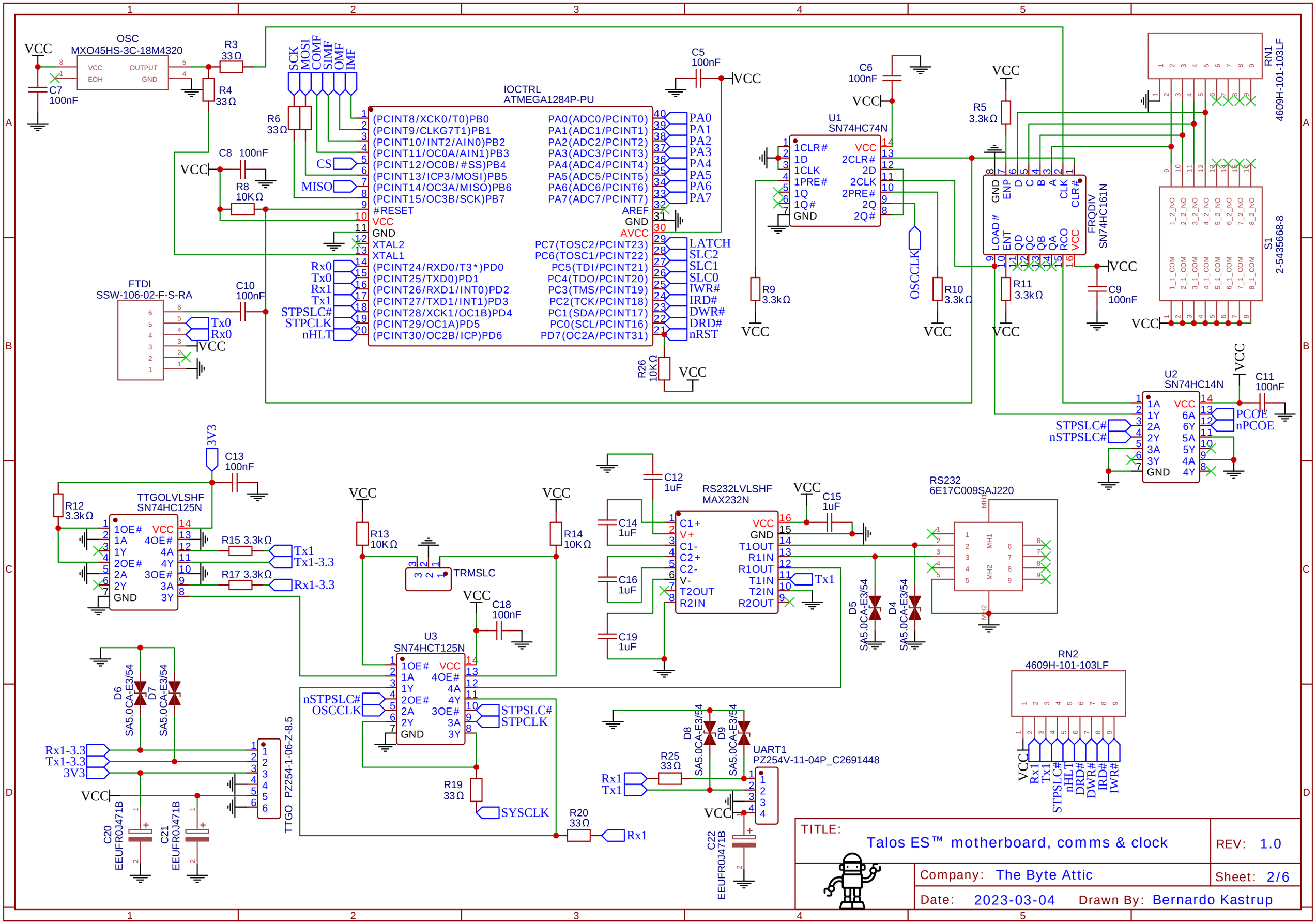
OSC
MXO45HS-3C-18M4320
VCC
OUTPUT
EOH
GND
C7
100nF
R3
33Ω
R4
33Ω
SCK
MOSI
COMF
SIMF
OMF
IMF
R6
33Ω
CS
MISO
C8
100nF
R8
10KΩ
IOCTRL
ATMEGA1284P-PU
(PCINT8/XCK0/T0)PB0
(PCINT9/CLKG7T1)PB1
(PCINT10/INT2/AIN0)PB2
(PCINT11/OC0A/AIN1)PB3
(PCINT12/OC0B/#SS)PB4
(PCINT13/ICP3/MOSI)PB5
(PCINT14/OC3A/MISO)PB6
(PCINT15/OC3B/SCK)PB7
#RESET
VCC
GND
XTAL2
XTAL1
(PCINT24/RXD0/T3*)PD0
(PCINT25/TXD0)PD1
(PCINT26/RXD1/INT0)PD2
(PCINT27/TXD1/INT1)PD3
(PCINT28/XCK1/OC1B)PD4
(PCINT29/OC1A)PD5
(PCINT30/OC2B/ICP)PD6
PA0(ADC0/PCINT0)
PA1(ADC1/PCINT1)
PA2(ADC2/PCINT2)
PA3(ADC3/PCINT3)
PA4(ADC4/PCINT4)
PA5(ADC5/PCINT5)
PA6(ADC6/PCINT6)
PA7(ADC7/PCINT7)
AREF
GND
AVCC
PC7(TOSC2/PCINT23)
PC6(TOSC1/PCINT22)
PC5(TDI/PCINT21)
PC4(TDO/PCINT20)
PC3(TMS/PCINT19)
PC2(TCK/PCINT18)
PC1(SDA/PCINT17)
PC0(SCL/PCINT16)
PD7(OC2A/PCINT31)
PA0
PA1
PA2
PA3
PA4
PA5
PA6
PA7
LATCH
SLC2
SLC1
SLC0
IWR#
IRD#
DWR#
DRD#
nRST
Rx0
Tx0
Rx1
Tx1
STPSLC#
STPCLK
nHLT
C5
100nF
R26
10KΩ
FTDI
SSW-106-02-F-S-RA
C10
100nF
Tx0
Rx0
C6
100nF
U1
SN74HC74N
1CLR#
1D
1CLK
1PRE#
1Q
1Q#
GND
2CLR#
2D
2CLK
2PRE#
2Q
2Q#
R9
3.3kΩ
OSCCLK
R10
3.3kΩ
R5
3.3kΩ
FRQDIV
SN74HC161N
GND
ENP
D
C
B
A
CLK
CLR#
LOAD#
ENT
QD
QC
QB
QA
RCO
R11
3.3kΩ
C9
100nF
RN1
4609H-101-103LF
S1
2-5435668-8
U2
SN74HC14N
1A
1Y
2A
2Y
3A
3Y
6A
6Y
5A
5Y
4A
4Y
PCOE
nPCOE
C11
100nF
3V3
C13
100nF
R12
3.3kΩ
TTGOLVSHF
SN74HC125N
1OE#
4OE#
3OE#
R15 3.3kΩ
R17 3.3kΩ
Tx1
Tx1-3.3
Rx1-3.3
R13
10KΩ
R14
10KΩ
TRMSLC
C18
100nF
U3
SN74HCT125N
nSTPSLC#
OSCCLK
SYSCLK
R19
33Ω
C12
1uF
C14
1uF
C16
1uF
C19
1uF
RS232LVLSHF
MAX232N
C1+
V+
C1-
C2+
C2-
V-
T2OUT
R2IN
T1OUT
R1IN
R1OUT
T1IN
T2IN
R2OUT
C15
1uF
RS232
6E17C009SAJ220
MH1
MH2
D5
SA5.0CA-E3/54
D4
SA5.0CA-E3/54
D6
SA5.0CA-E3/54
D7
SA5.0CA-E3/54
Rx1-3.3
Tx1-3.3
3V3
TTGO PZ254-1-06-Z-8.5
C20
EEUFR0J471B
C21
EEUFR0J471B
D8
SA5.0CA-E3/54
D9
SA5.0CA-E3/54
R25
33Ω
Rx1
Tx1
UART1
PZ254V-11-04P_C2691448
C22
EEUFR0J471B
R20
33Ω
RN2
4609H-101-103LF
Rx1
Tx1
STPSLC#
nHLT
DRD#
DWR#
IRD#
IWR#
TITLE:
Talos ES™ motherboard, comms & clock
REV: 1.0
Company: The Byte Attic
Sheet: 2/6
Date: 2023-03-04
Drawn By: Bernardo Kastrup

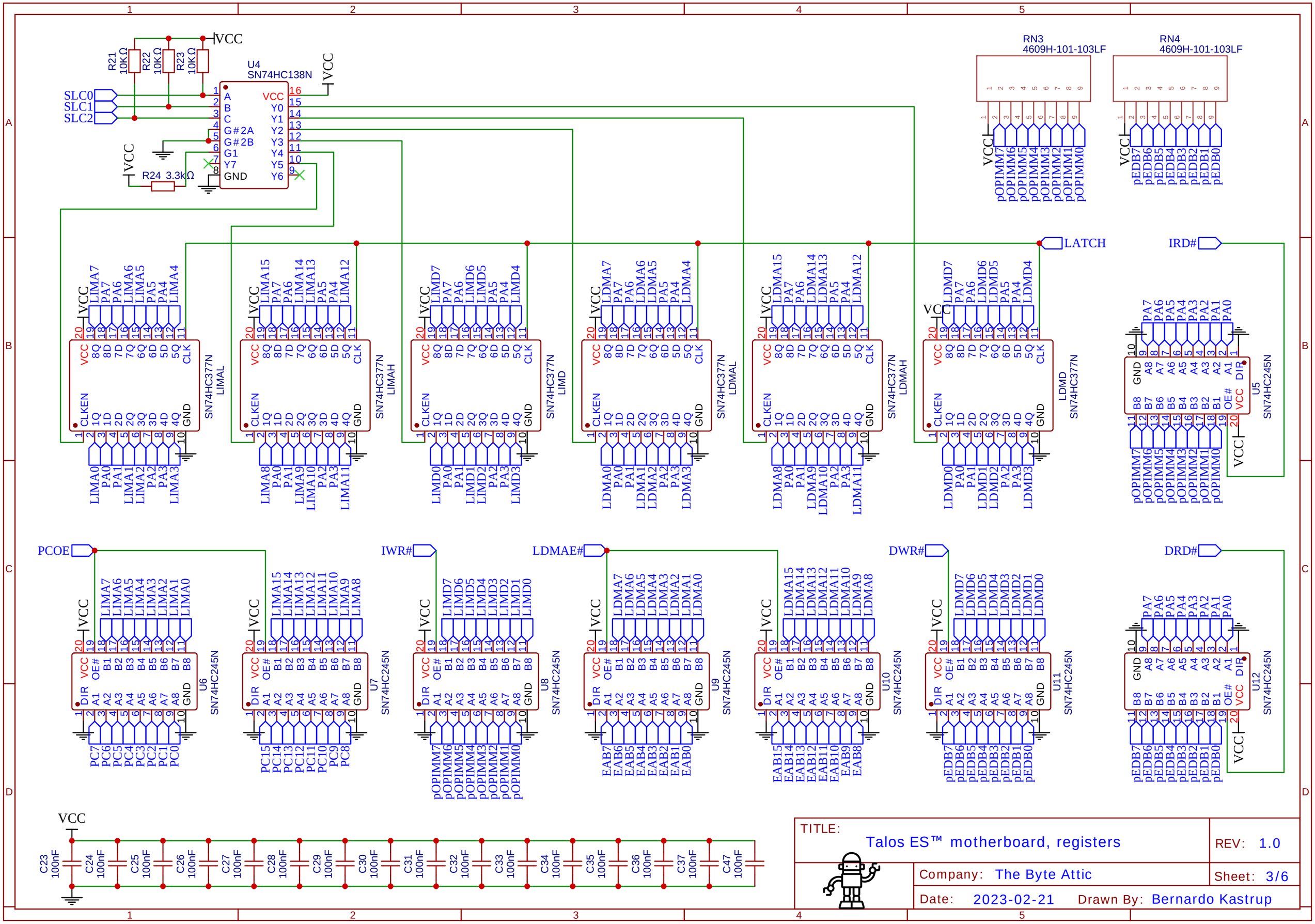

TITLE: Talos ES™ motherboard, registers

REV: 1.0

Company: The Byte Attic

Sheet: 3/6

Date: 2023-02-21

Drawn By: Bernardo Kastrup

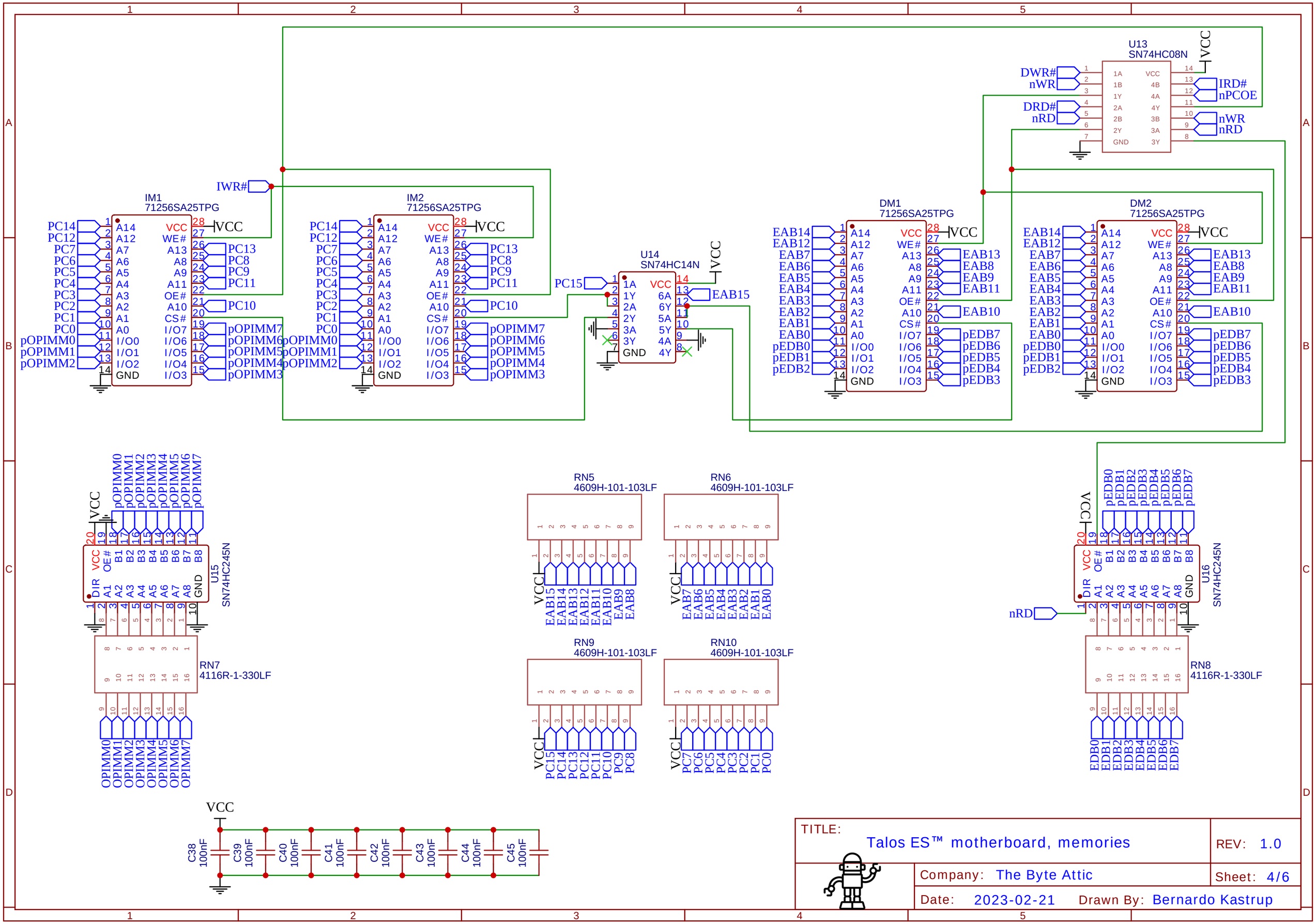
IM1
71256SA25TPG
IM2
71256SA25TPG
U14
SN74HC14N
U13
SN74HC08N
DM1
71256SA25TPG
DM2
71256SA25TPG
U15
SN74HC245N
U16
SN74HC245N
RN5
4609H-101-103LF
RN6
4609H-101-103LF
RN7
4116R-1-330LF
RN8
4116R-1-330LF
RN9
4609H-101-103LF
RN10
4609H-101-103LF
C38 100nF
C39 100nF
C40 100nF
C41 100nF
C42 100nF
C43 100nF
C44 100nF
C45 100nF
VCC
IWR#
PC15
EAB15
DWR#
nWR
DRD#
nRD
IRD#
nPCOE
pOPIMM0
pOPIMM1
pOPIMM2
pOPIMM3
pOPIMM4
pOPIMM5
pOPIMM6
pOPIMM7
OPIMM0
OPIMM1
OPIMM2
OPIMM3
OPIMM4
OPIMM5
OPIMM6
OPIMM7
pEDB0
pEDB1
pEDB2
pEDB3
pEDB4
pEDB5
pEDB6
pEDB7
EDB0
EDB1
EDB2
EDB3
EDB4
EDB5
EDB6
EDB7
TITLE:
Talos ES™ motherboard, memories
REV: 1.0
Company: The Byte Attic
Sheet: 4/6
Date: 2023-02-21
Drawn By: Bernardo Kastrup

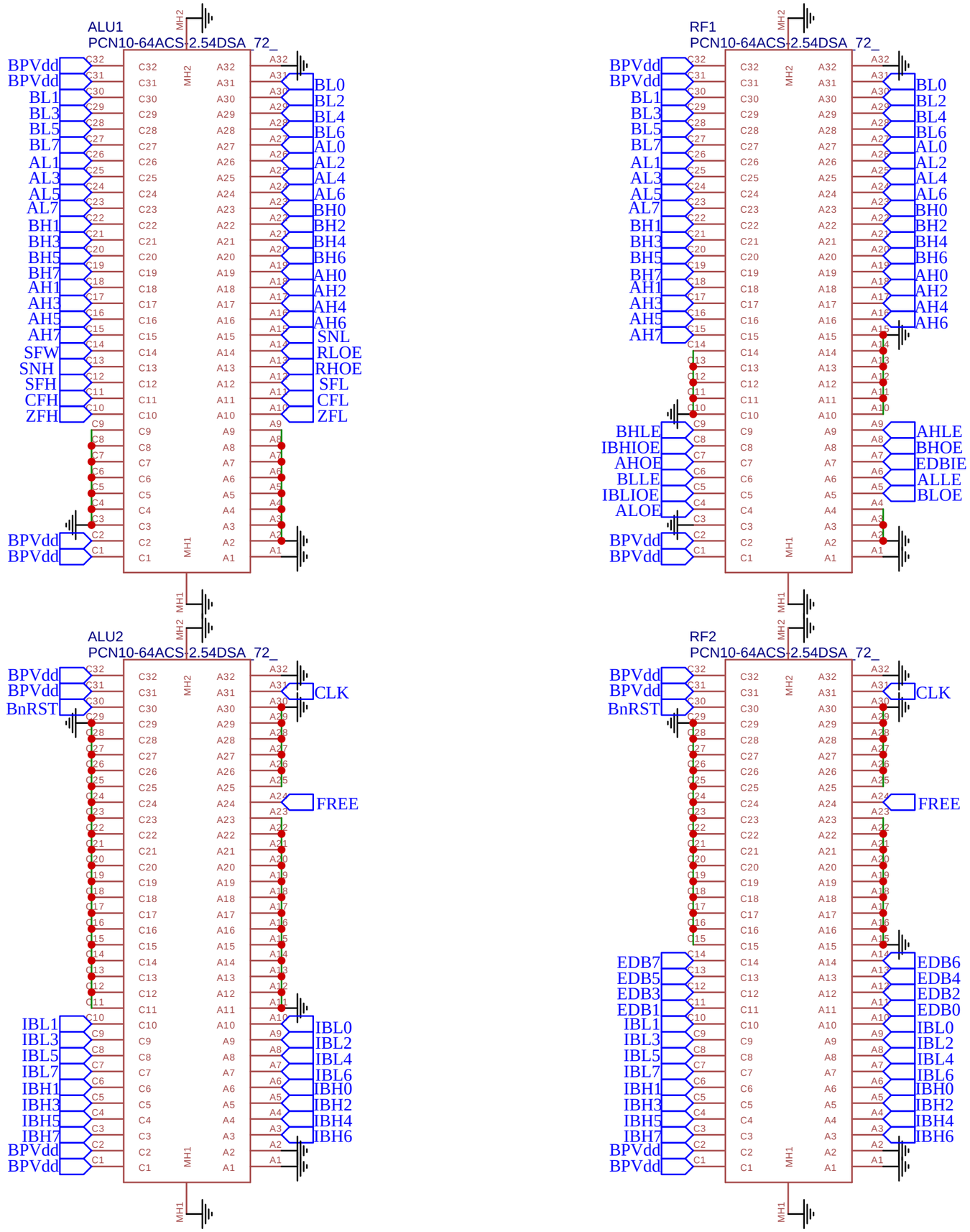

TITLE: Talos ES™ motherboard, backplane 1

REV: 1.0

Company: The Byte Attic

Sheet: 5/6

Date: 2023-02-21

Drawn By: Bernardo Kastrup

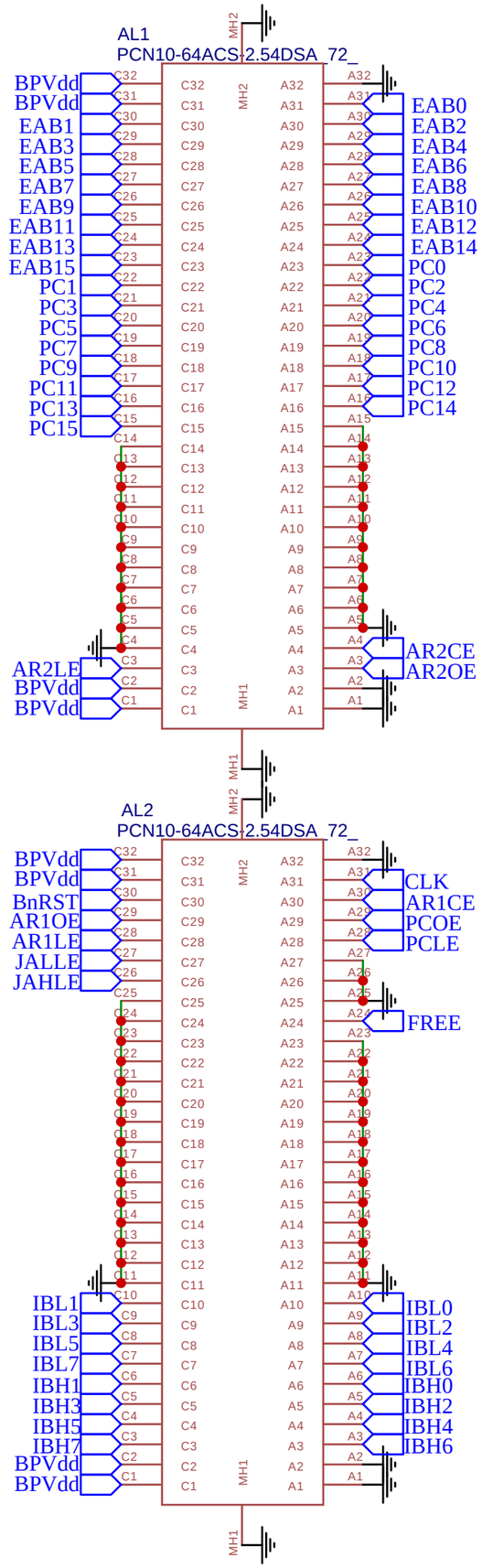

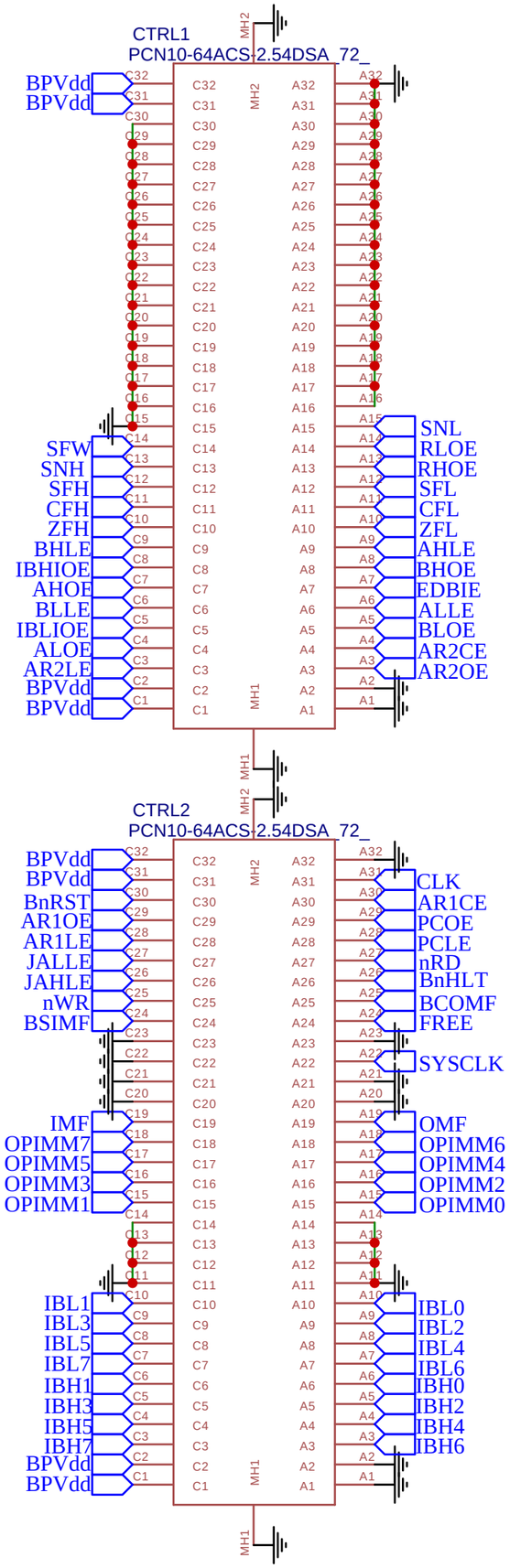

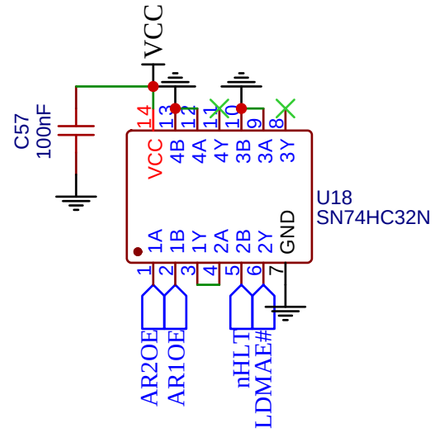

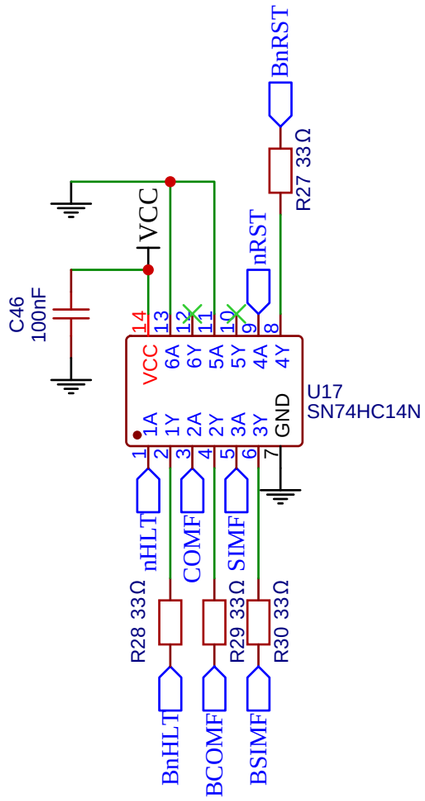

TITLE: Talos ES™ motherboard, backplane 2	REV: 1.0
Company: The Byte Attic	Sheet: 6/6
Date: 2023-02-21 Drawn By: Bernardo Kastrup	