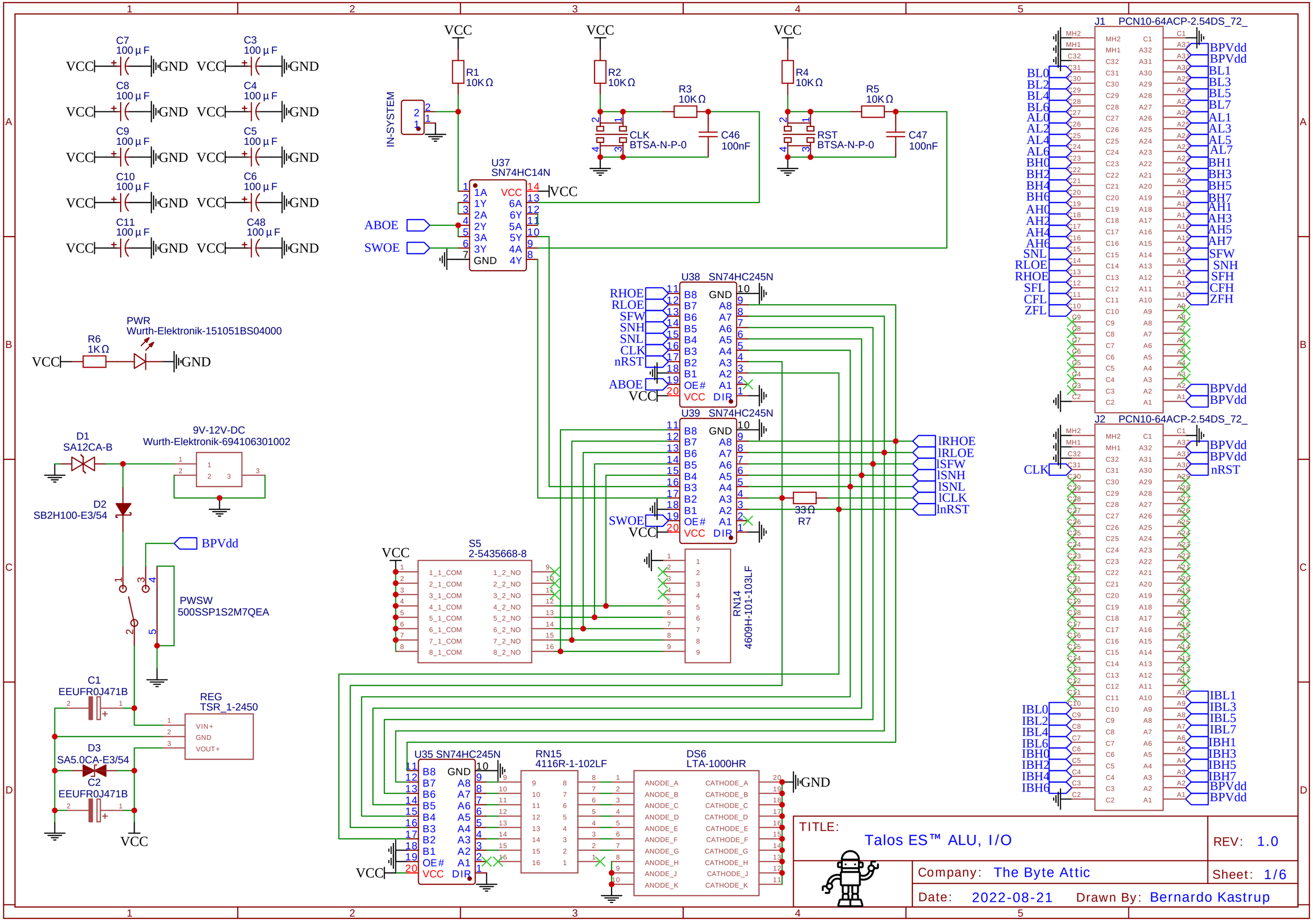
C7 100µF
C3 100µF
C8 100µF
C4 100µF
C9 100µF
C5 100µF
C10 100µF
C6 100µF
C11 100µF
C48 100µF
VCC
GND
IN-SYSTEM
R1 10KΩ
R2 10KΩ
R3 10KΩ
R4 10KΩ
R5 10KΩ
CLK BTSA-N-P-0
RST BTSA-N-P-0
C46 100nF
C47 100nF
U37 SN74HC14N
ABOE
SWOE
U38 SN74HC245N
U39 SN74HC245N
RHOE
RLOE
SFW
SNH
SNL
CLK
nRST
lRHOE
lRLOE
lSFW
lSNH
lSNL
lCLK
lnRST
33Ω R7
S5 2-5435668-8
RN14 4609H-101-103LF
PWR Wurth-Elektronik-151051BS04000
R6 1KΩ
D1 SA12CA-B
9V-12V-DC Wurth-Elektronik-694106301002
D2 SB2H100-E3/54
BPVdd
PWSW 500SSP1S2M7QEA
C1 EEUFR0J471B
REG TSR_1-2450
VIN+
GND
VOUT+
D3 SA5.0CA-E3/54
C2 EEUFR0J471B
U35 SN74HC245N
RN15 4116R-1-102LF
DS6 LTA-1000HR
J1 PCN10-64ACP-2.54DS_72_
J2 PCN10-64ACP-2.54DS_72_
BL0
BL2
BL4
BL6
AL0
AL2
AL4
AL6
BH0
BH2
BH4
BH6
AH0
AH2
AH4
AH6
SNL
RLOE
RHOE
SFL
CFL
ZFL
BPVdd
BL1
BL3
BL5
BL7
AL1
AL3
AL5
AL7
BH1
BH3
BH5
BH7
AH1
AH3
AH5
AH7
SFW
SNH
SFH
CFH
ZFH
CLK
nRST
IBL0
IBL2
IBL4
IBL6
IBH0
IBH2
IBH4
IBH6
IBL1
IBL3
IBL5
IBL7
IBH1
IBH3
IBH5
IBH7
TITLE:
Talos ES™ ALU, I/O
REV: 1.0
Company: The Byte Attic
Sheet: 1/6
Date: 2022-08-21
Drawn By: Bernardo Kastrup

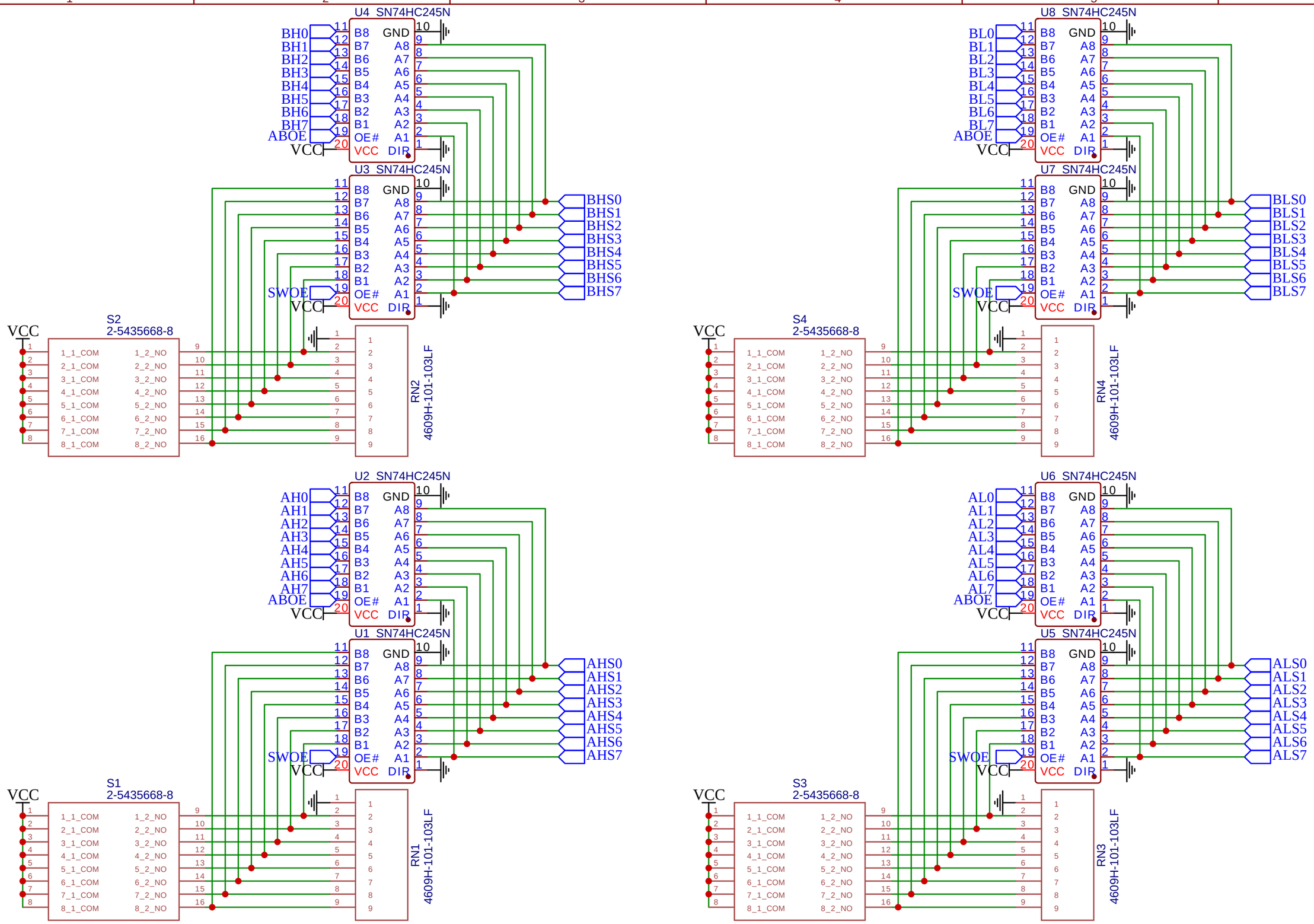

TITLE: Talos ES™ ALU, operand section	REV: 1.0
Company: The Byte Attic	Sheet: 2/6
Date: 2022-08-21 Drawn By: bkastrup	

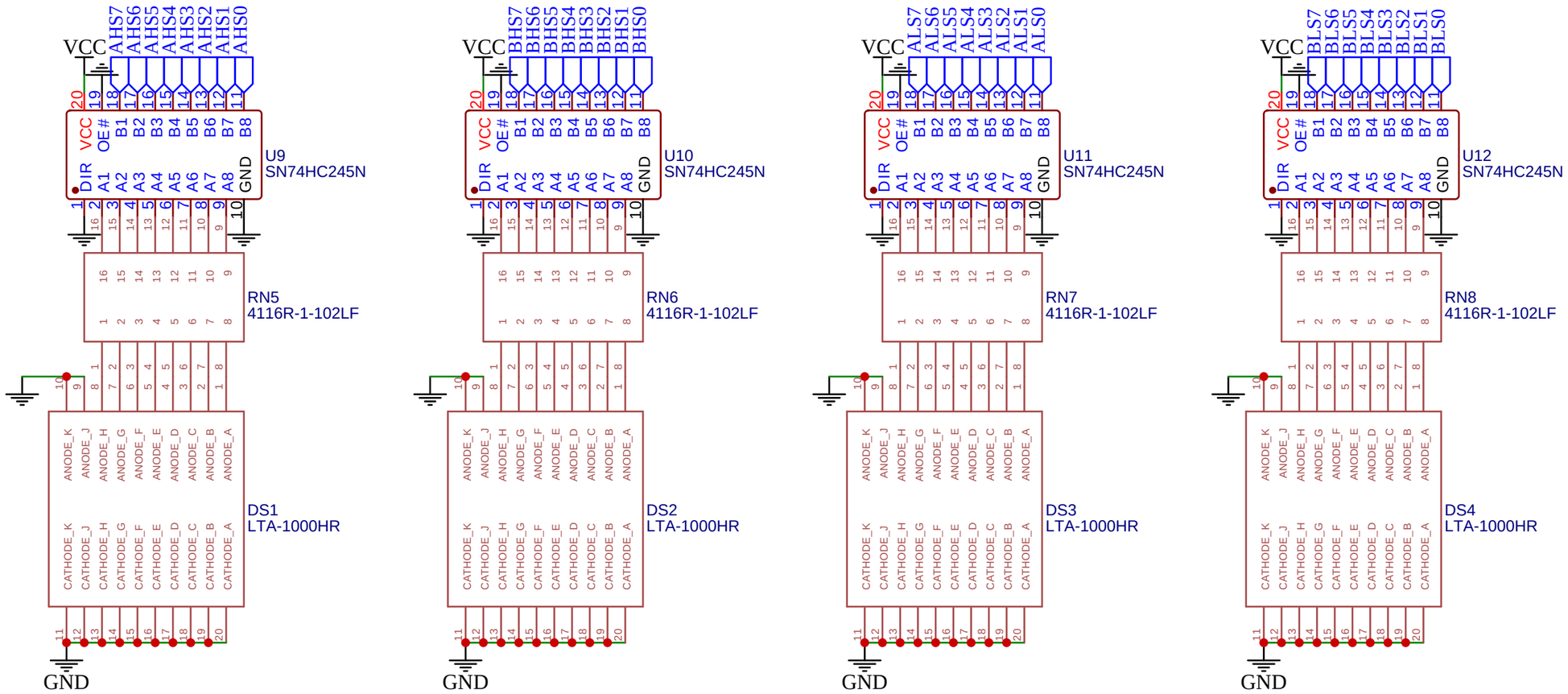

TITLE: Talos ES™ ALU, indicator section

REV: 1.0

Company: The Byte Attic

Sheet: 3/6

Date: 2022-08-21

Drawn By: Bernardo Kastrup

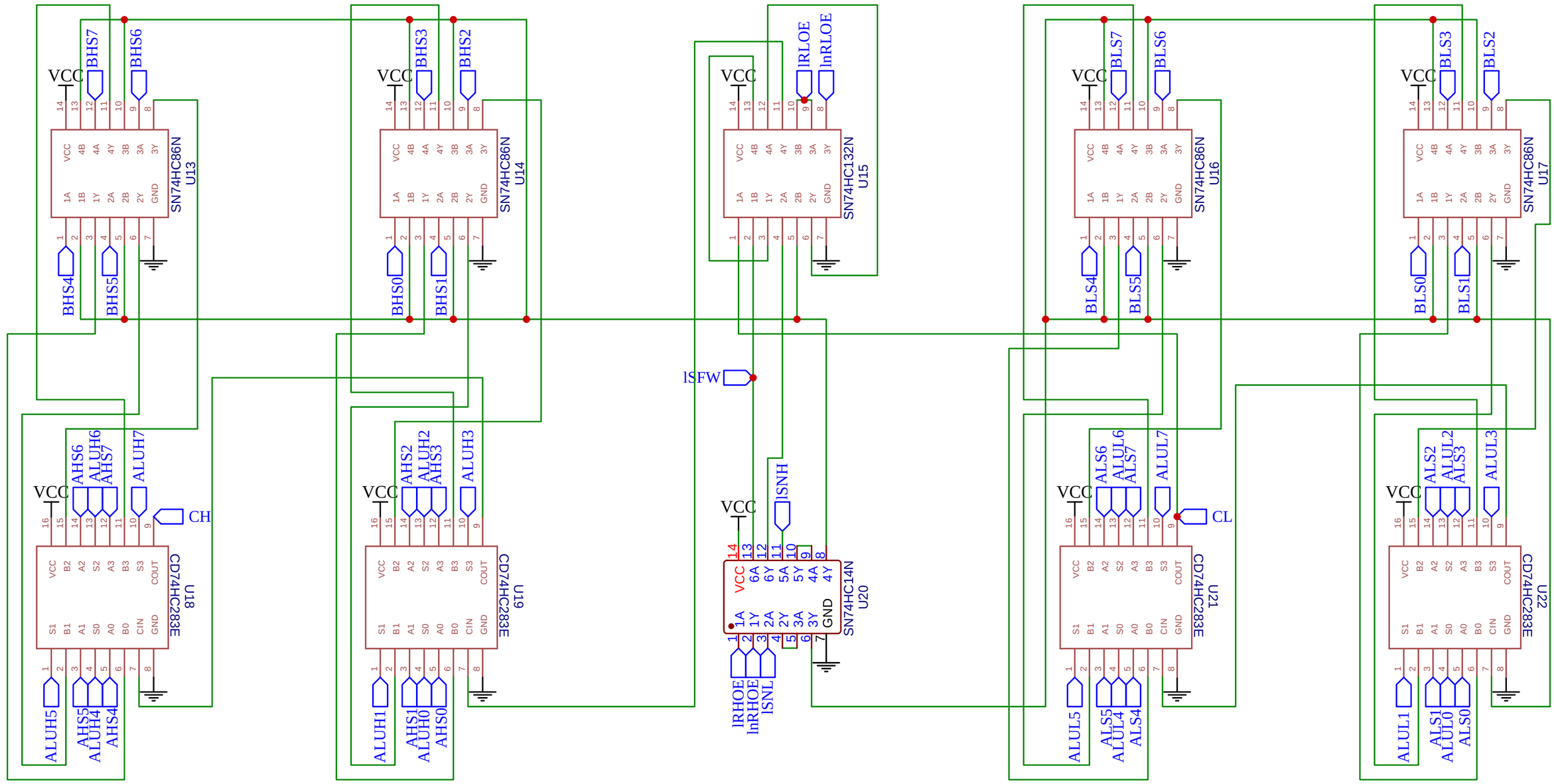

TITLE: Talos ES™ ALU, main arithmetic logic

REV: 1.0

Company: The Byte Attic

Sheet: 4/6

Date: 2022-08-21

Drawn By: Bernardo Kastrup

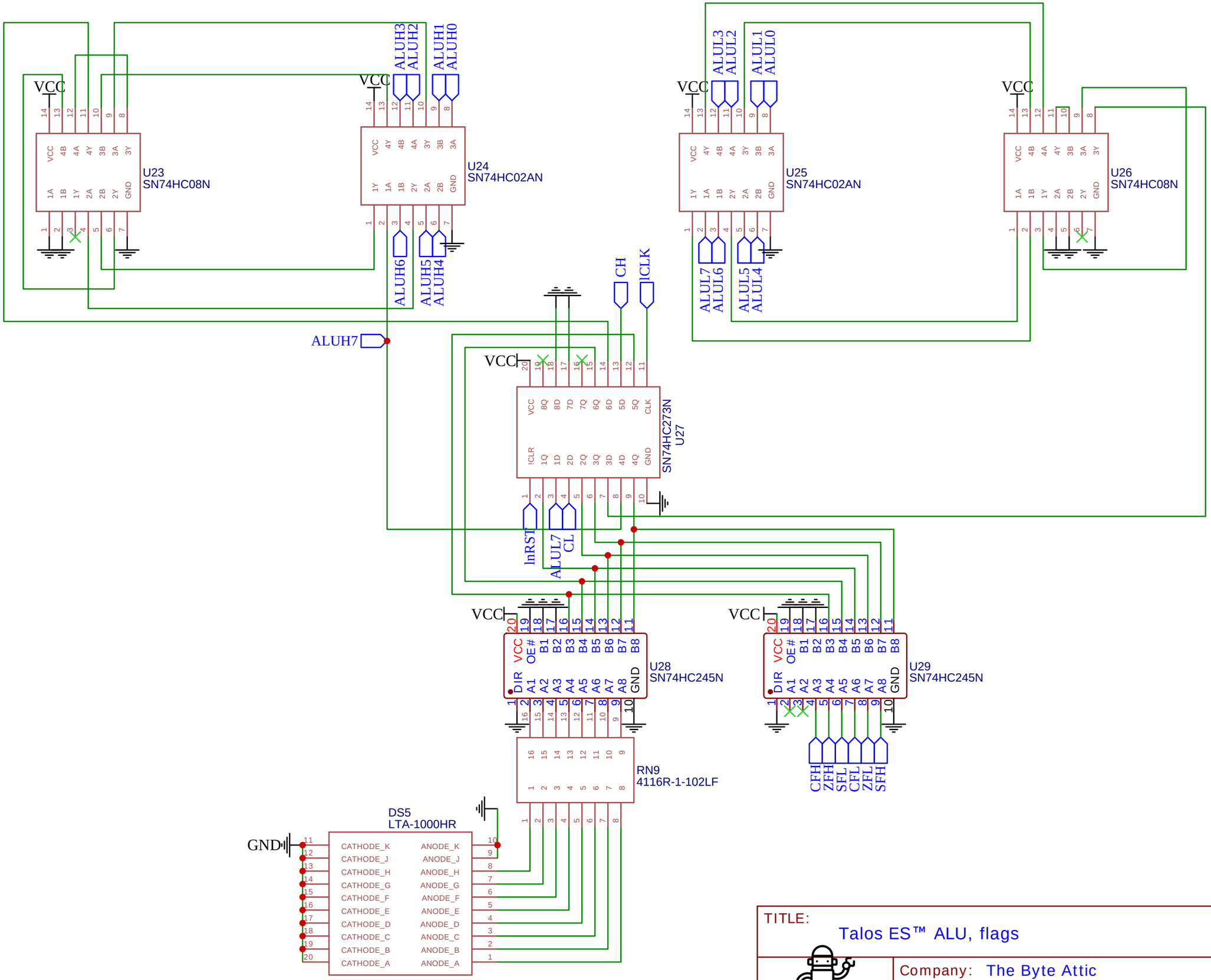

TITLE: Talos ES™ ALU, flags

REV: 1.0

Company: The Byte Attic

Sheet: 5/6

Date: 2022-08-21

Drawn By: Bernardo Kastrup

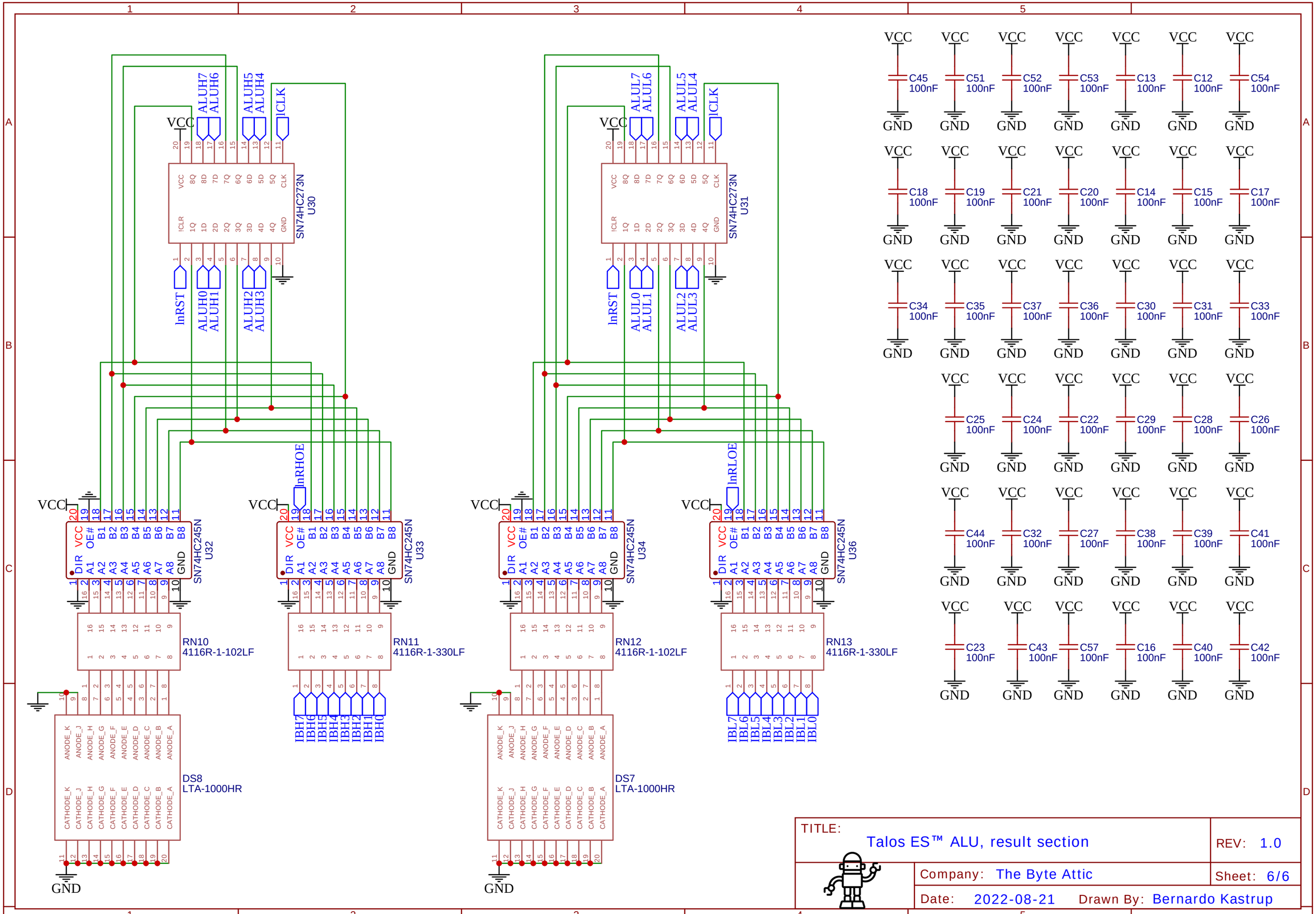
SN74HC273N U30
SN74HC273N U31
SN74HC245N U32
SN74HC245N U33
SN74HC245N U34
SN74HC245N U36
RN10 4116R-1-102LF
RN11 4116R-1-330LF
RN12 4116R-1-102LF
RN13 4116R-1-330LF
DS8 LTA-1000HR
DS7 LTA-1000HR
ALUH7 ALUH6
ALUH5 ALUH4
!CLK
!nRST
ALUH0 ALUH1
ALUH2 ALUH3
ALUL7 ALUL6
ALUL5 ALUL4
ALUL0 ALUL1
ALUL2 ALUL3
!nRHOE
!nRLOE
IBH7 IBH6 IBH5 IBH4 IBH3 IBH2 IBH1 IBH0
IBL7 IBL6 IBL5 IBL4 IBL3 IBL2 IBL1 IBL0
VCC
GND
C45 100nF
C51 100nF
C52 100nF
C53 100nF
C13 100nF
C12 100nF
C54 100nF
C18 100nF
C19 100nF
C21 100nF
C20 100nF
C14 100nF
C15 100nF
C17 100nF
C34 100nF
C35 100nF
C37 100nF
C36 100nF
C30 100nF
C31 100nF
C33 100nF
C25 100nF
C24 100nF
C22 100nF
C29 100nF
C28 100nF
C26 100nF
C44 100nF
C32 100nF
C27 100nF
C38 100nF
C39 100nF
C41 100nF
C23 100nF
C43 100nF
C57 100nF
C16 100nF
C40 100nF
C42 100nF
TITLE:
Talos ES™ ALU, result section
REV: 1.0
Company: The Byte Attic
Sheet: 6/6
Date: 2022-08-21
Drawn By: Bernardo Kastrup