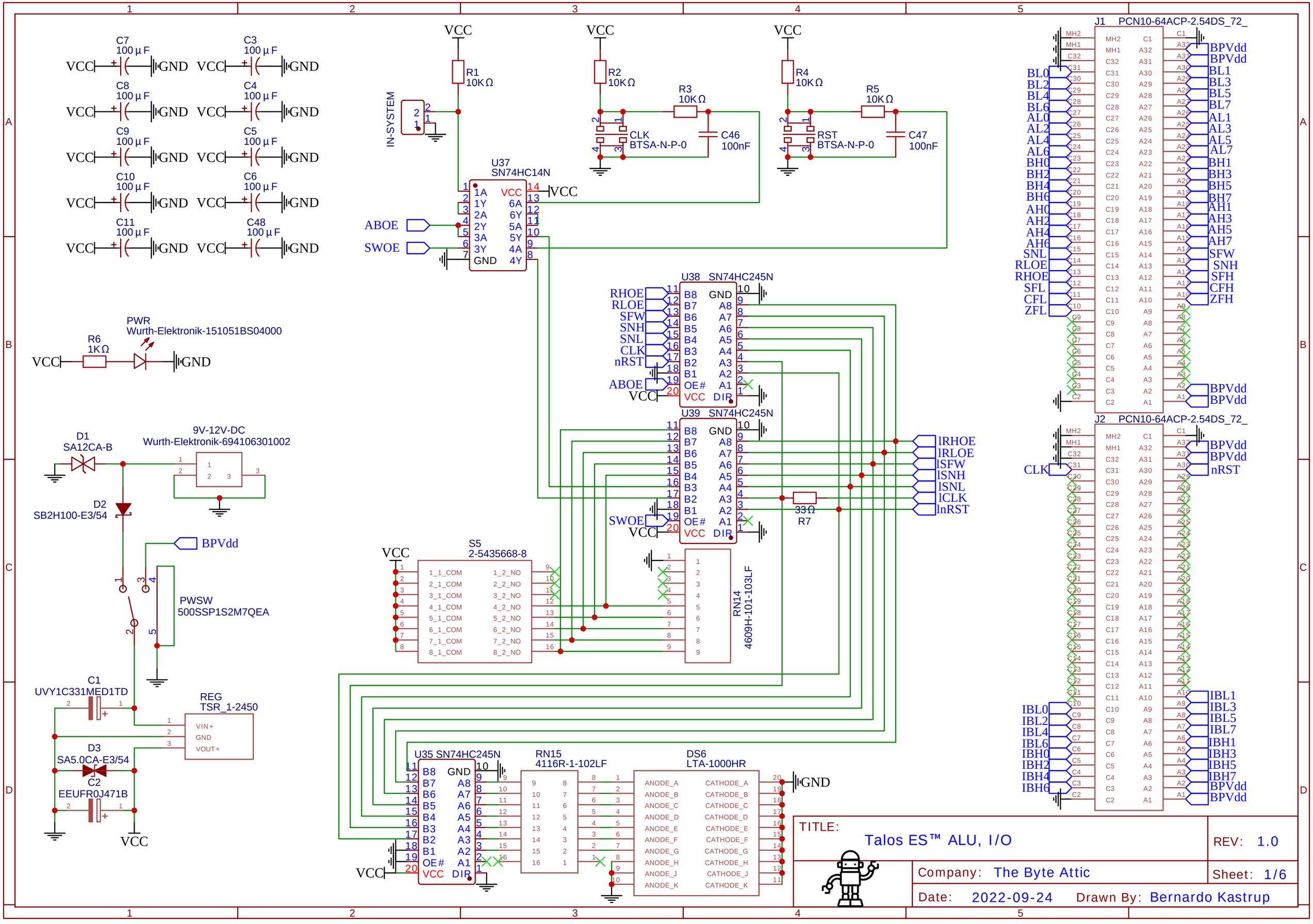
C7 100µF
C3 100µF
C8 100µF
C4 100µF
C9 100µF
C5 100µF
C10 100µF
C6 100µF
C11 100µF
C48 100µF
VCC
GND
IN-SYSTEM
R1 10KΩ
R2 10KΩ
R3 10KΩ
R4 10KΩ
R5 10KΩ
CLK BTSA-N-P-0
RST BTSA-N-P-0
C46 100nF
C47 100nF
U37 SN74HC14N
ABOE
SWOE
U38 SN74HC245N
U39 SN74HC245N
RHOE
RLOE
SFW
SNH
SNL
CLK
nRST
lRHOE
lRLOE
lSFW
lSNH
lSNL
lCLK
lnRST
33Ω R7
S5 2-5435668-8
RN14 4609H-101-103LF
J1 PCN10-64ACP-2.54DS_72_
J2 PCN10-64ACP-2.54DS_72_
BPVdd
BL0
BL1
BL2
BL3
BL4
BL5
BL6
BL7
AL0
AL1
AL2
AL3
AL4
AL5
AL6
AL7
BH0
BH1
BH2
BH3
BH4
BH5
BH6
BH7
AH0
AH1
AH2
AH3
AH4
AH5
AH6
AH7
SNL
SFW
RLOE
SNH
RHOE
SFH
SFL
CFH
CFL
ZFH
ZFL
IBL0
IBL1
IBL2
IBL3
IBL4
IBL5
IBL6
IBL7
IBH0
IBH1
IBH2
IBH3
IBH4
IBH5
IBH6
IBH7
R6 1KΩ
PWR Wurth-Elektronik-151051BS04000
D1 SA12CA-B
9V-12V-DC Wurth-Elektronik-694106301002
D2 SB2H100-E3/54
PWSW 500SSP1S2M7QEA
C1 UVY1C331MED1TD
REG TSR_1-2450
VIN+
GND
VOUT+
D3 SA5.0CA-E3/54
C2 EEUFR0J471B
U35 SN74HC245N
RN15 4116R-1-102LF
DS6 LTA-1000HR
ANODE_A
ANODE_B
ANODE_C
ANODE_D
ANODE_E
ANODE_F
ANODE_G
ANODE_H
ANODE_J
ANODE_K
CATHODE_A
CATHODE_B
CATHODE_C
CATHODE_D
CATHODE_E
CATHODE_F
CATHODE_G
CATHODE_H
CATHODE_J
CATHODE_K
TITLE:
Talos ES™ ALU, I/O
REV: 1.0
Company: The Byte Attic
Sheet: 1/6
Date: 2022-09-24
Drawn By: Bernardo Kastrup

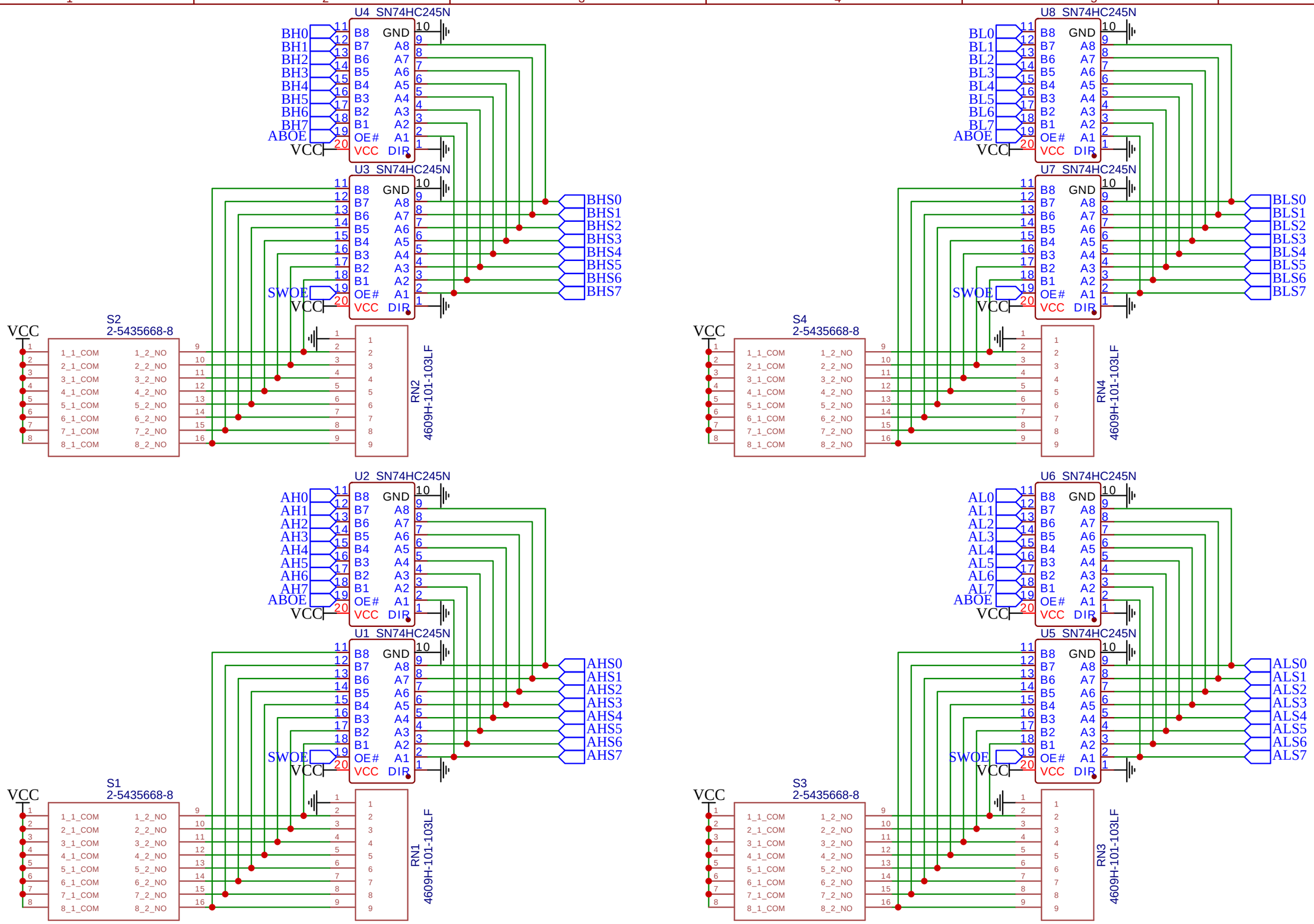


| | |
|---|---|
| TITLE: Talos ES™ ALU, operand section | REV: 1.0 |
| Company: The Byte Attic | Sheet: 2/6 |
| Date: 2022-08-21 Drawn By: bkastrup | |

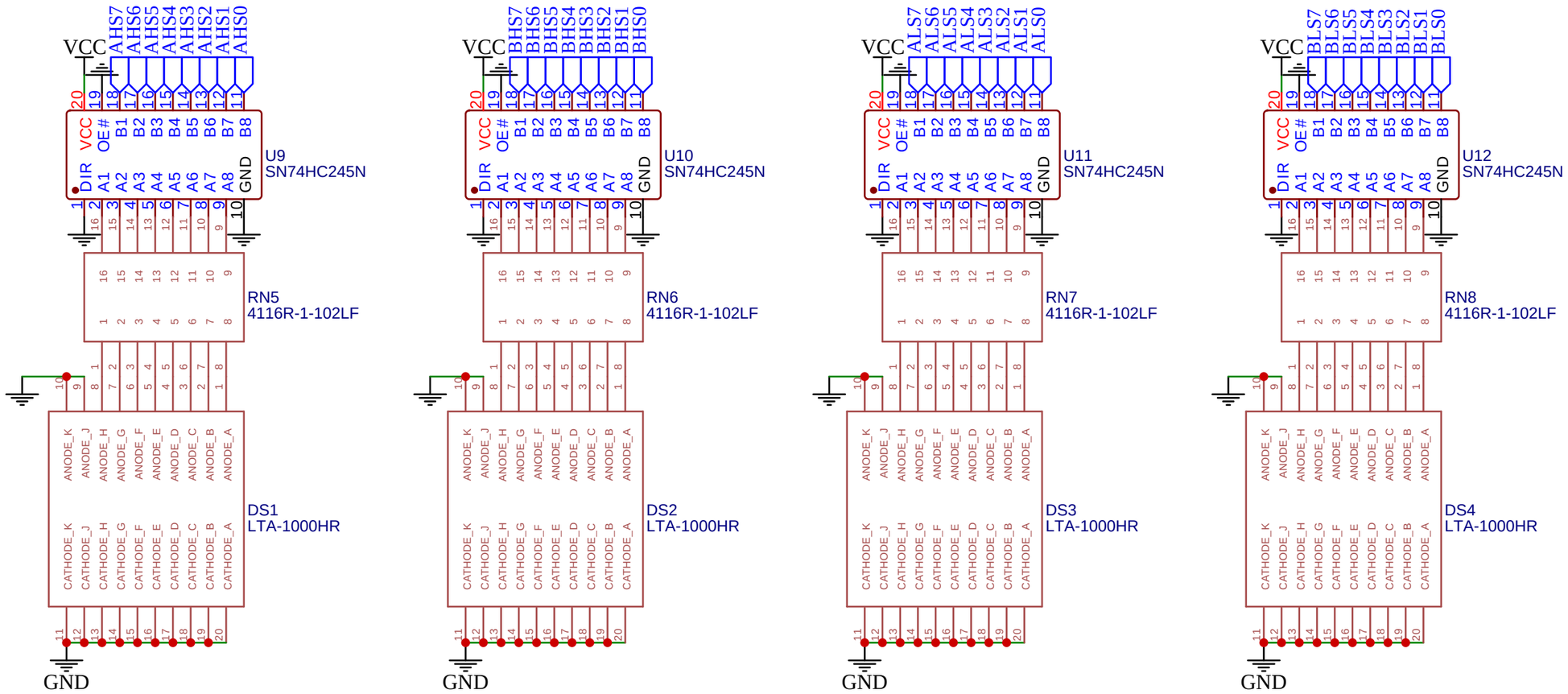


TITLE: Talos ES™ ALU, indicator section

REV: 1.0

Company: The Byte Attic

Sheet: 3/6

Date: 2022-08-21

Drawn By: Bernardo Kastrup

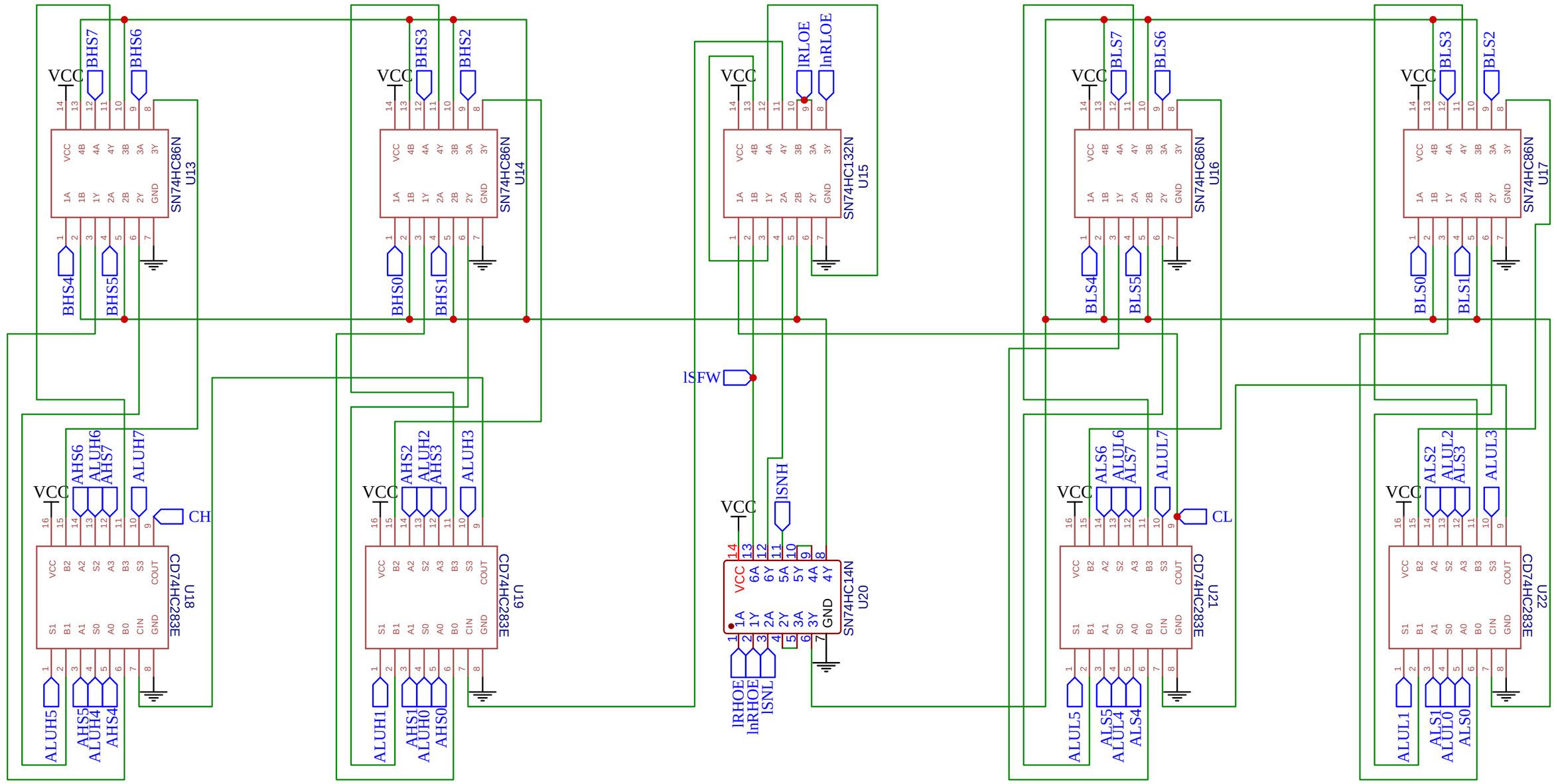


TITLE: Talos ES™ ALU, main arithmetic logic

REV: 1.0

Company: The Byte Attic

Sheet: 4/6

Date: 2022-08-21

Drawn By: Bernardo Kastrup

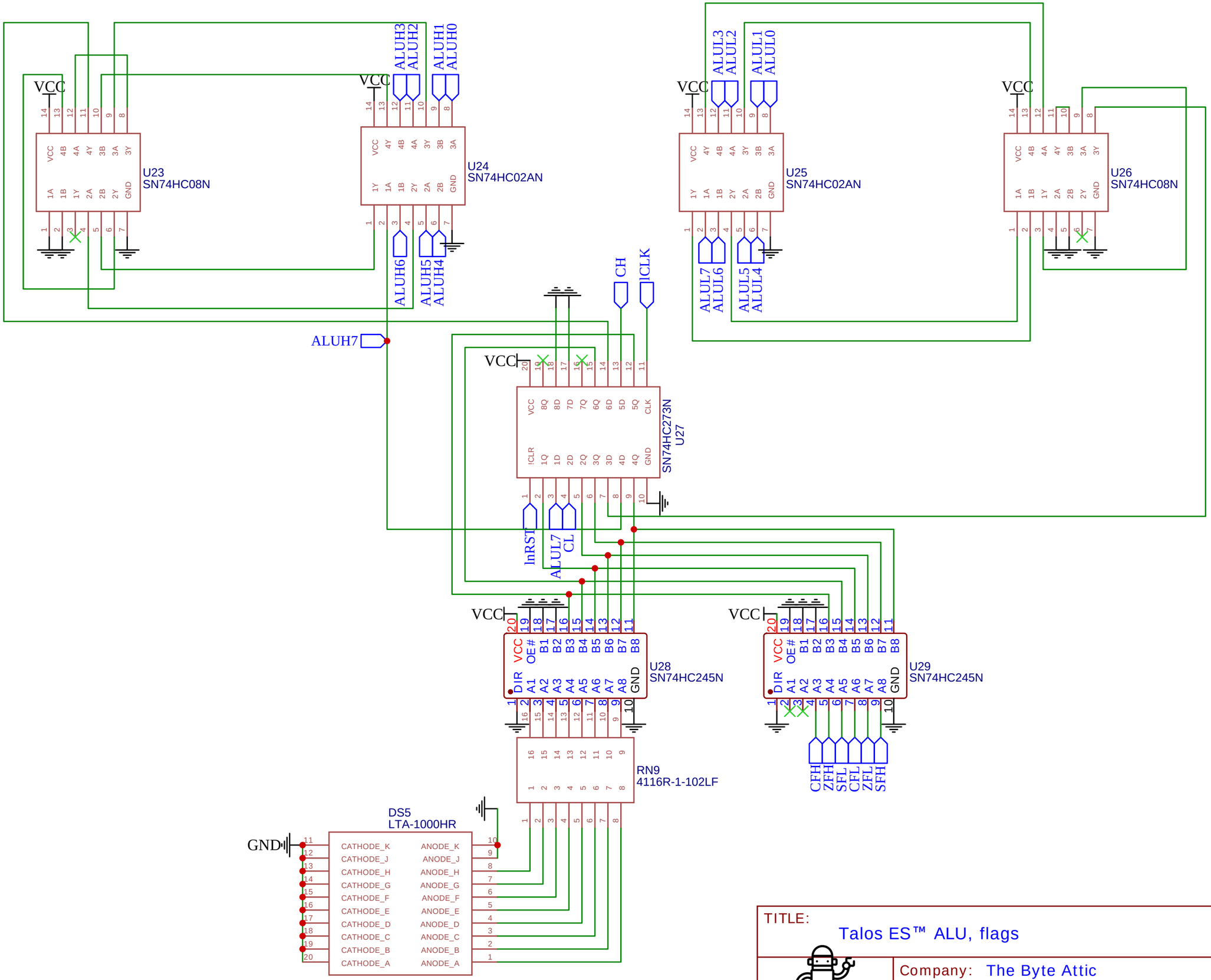


TITLE: Talos ES™ ALU, flags

REV: 1.0

Company: The Byte Attic

Sheet: 5/6

Date: 2022-08-21

Drawn By: Bernardo Kastrup

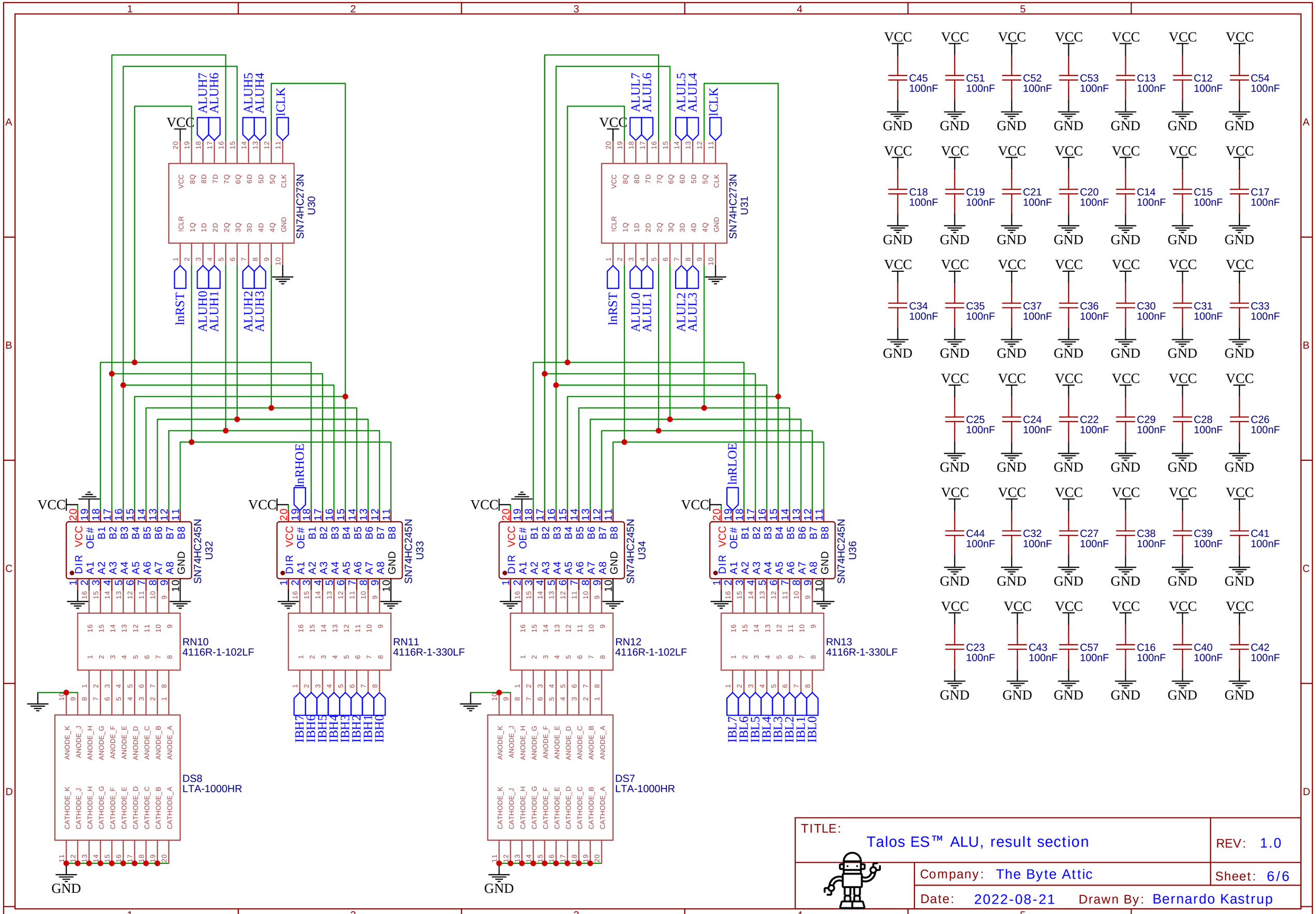
SN74HC273N U30
SN74HC273N U31
SN74HC245N U32
SN74HC245N U33
SN74HC245N U34
SN74HC245N U36
RN10 4116R-1-102LF
RN11 4116R-1-330LF
RN12 4116R-1-102LF
RN13 4116R-1-330LF
DS8 LTA-1000HR
DS7 LTA-1000HR
ALUH7 ALUH6
ALUH5 ALUH4
!CLK
!nRST
ALUH0 ALUH1
ALUH2 ALUH3
ALUL7 ALUL6
ALUL5 ALUL4
ALUL0 ALUL1
ALUL2 ALUL3
!nRHOE
!nRLOE
IBH7 IBH6 IBH5 IBH4 IBH3 IBH2 IBH1 IBH0
IBL7 IBL6 IBL5 IBL4 IBL3 IBL2 IBL1 IBL0
VCC
GND
C45 100nF
C51 100nF
C52 100nF
C53 100nF
C13 100nF
C12 100nF
C54 100nF
C18 100nF
C19 100nF
C21 100nF
C20 100nF
C14 100nF
C15 100nF
C17 100nF
C34 100nF
C35 100nF
C37 100nF
C36 100nF
C30 100nF
C31 100nF
C33 100nF
C25 100nF
C24 100nF
C22 100nF
C29 100nF
C28 100nF
C26 100nF
C44 100nF
C32 100nF
C27 100nF
C38 100nF
C39 100nF
C41 100nF
C23 100nF
C43 100nF
C57 100nF
C16 100nF
C40 100nF
C42 100nF
TITLE:
Talos ES™ ALU, result section
REV: 1.0
Company: The Byte Attic
Sheet: 6/6
Date: 2022-08-21
Drawn By: Bernardo Kastrup