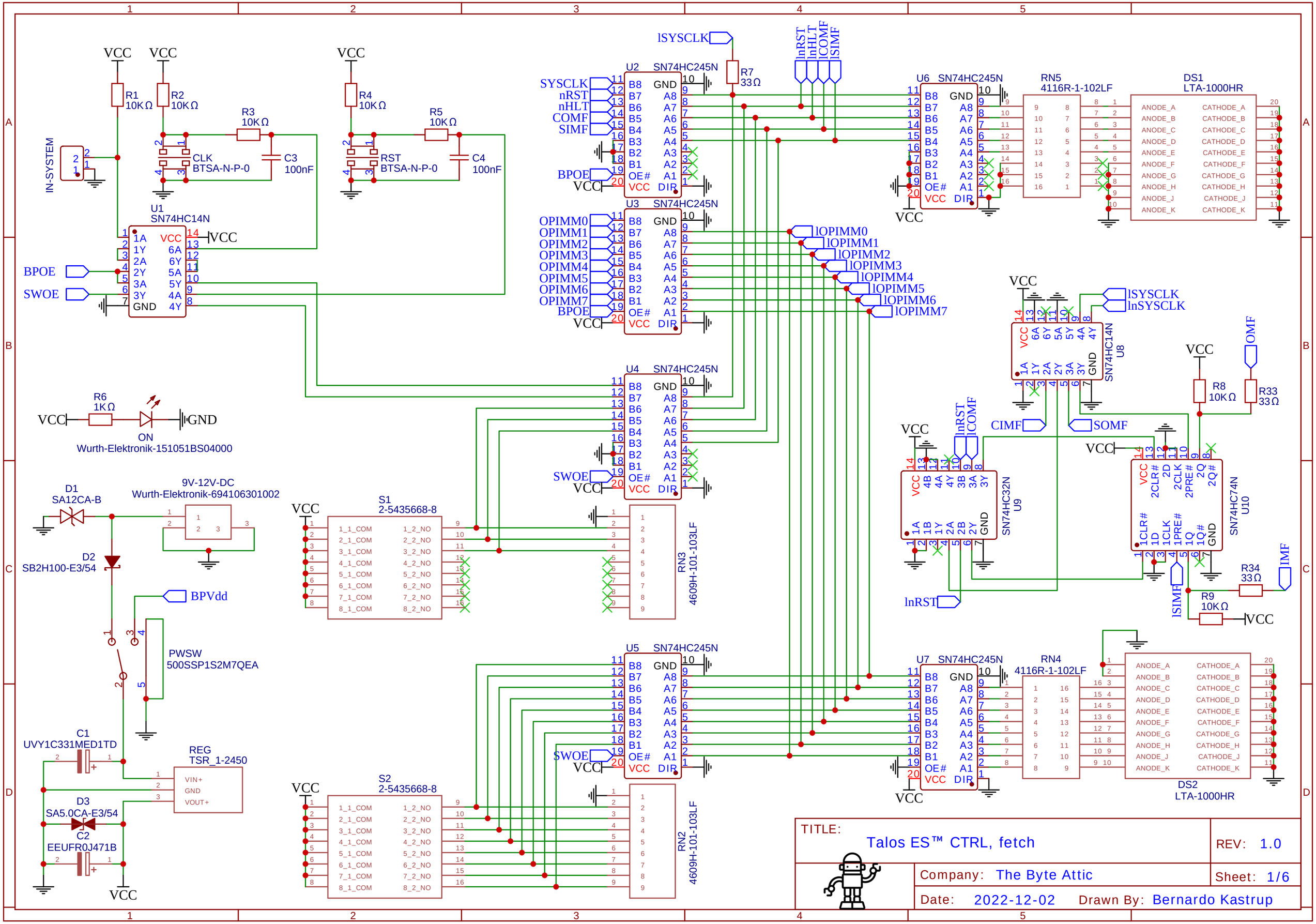
VCC
R1 10KΩ
R2 10KΩ
R3 10KΩ
R4 10KΩ
R5 10KΩ
CLK BTSA-N-P-0
RST BTSA-N-P-0
C3 100nF
C4 100nF
IN-SYSTEM
U1 SN74HC14N
BPOE
SWOE
R6 1KΩ
GND
ON
Wurth-Elektronik-151051BS04000
D1 SA12CA-B
9V-12V-DC
Wurth-Elektronik-694106301002
D2 SB2H100-E3/54
BPVdd
PWSW 500SSP1S2M7QEA
C1 UVY1C331MED1TD
REG TSR_1-2450
VIN+
GND
VOUT+
D3 SA5.0CA-E3/54
C2 EEUFR0J471B
U2 SN74HC245N
U3 SN74HC245N
U4 SN74HC245N
U5 SN74HC245N
U6 SN74HC245N
U7 SN74HC245N
SYSCLK
nRST
nHLT
COMF
SIMF
OPIMM0
OPIMM1
OPIMM2
OPIMM3
OPIMM4
OPIMM5
OPIMM6
OPIMM7
lSYSCLK
R7 33Ω
lnRST
lnHLT
lCOMF
lSIMF
lOPIMM0
lOPIMM1
lOPIMM2
lOPIMM3
lOPIMM4
lOPIMM5
lOPIMM6
lOPIMM7
S1 2-5435668-8
S2 2-5435668-8
RN3 4609H-101-103LF
RN2 4609H-101-103LF
RN5 4116R-1-102LF
RN4 4116R-1-102LF
DS1 LTA-1000HR
DS2 LTA-1000HR
ANODE_A
ANODE_B
ANODE_C
ANODE_D
ANODE_E
ANODE_F
ANODE_G
ANODE_H
ANODE_J
ANODE_K
CATHODE_A
CATHODE_B
CATHODE_C
CATHODE_D
CATHODE_E
CATHODE_F
CATHODE_G
CATHODE_H
CATHODE_J
CATHODE_K
lnSYSCLK
SN74HC14N U8
CIMF
SOMF
SN74HC32N U9
SN74HC74N U10
R8 10KΩ
R33 33Ω
OMF
R34 33Ω
IMF
R9 10KΩ
TITLE:
Talos ES™ CTRL, fetch
REV: 1.0
Company: The Byte Attic
Sheet: 1/6
Date: 2022-12-02
Drawn By: Bernardo Kastrup

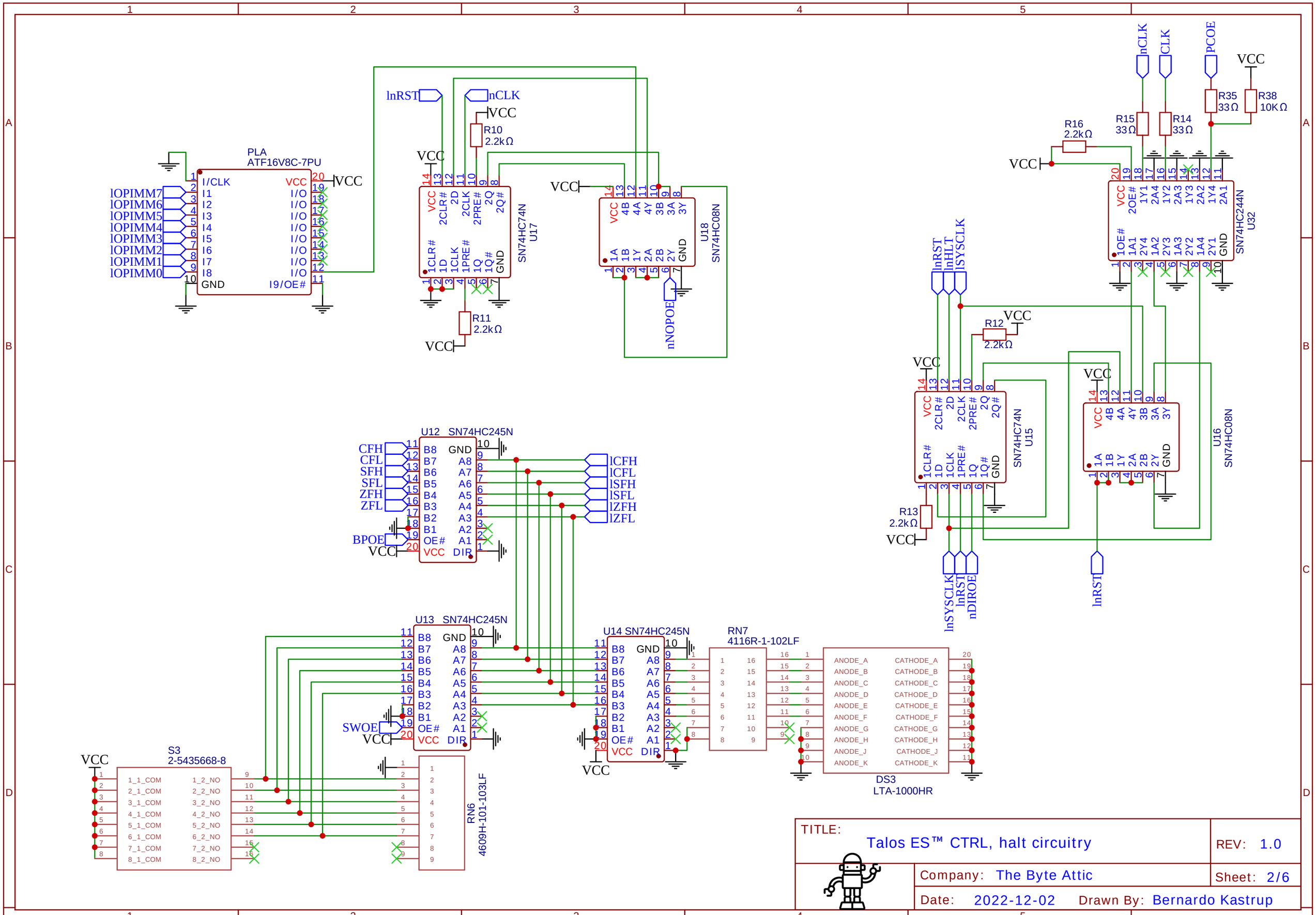

TITLE: Talos ES™ CTRL, halt circuitry

REV: 1.0

Company: The Byte Attic

Sheet: 2/6

Date: 2022-12-02

Drawn By: Bernardo Kastrup

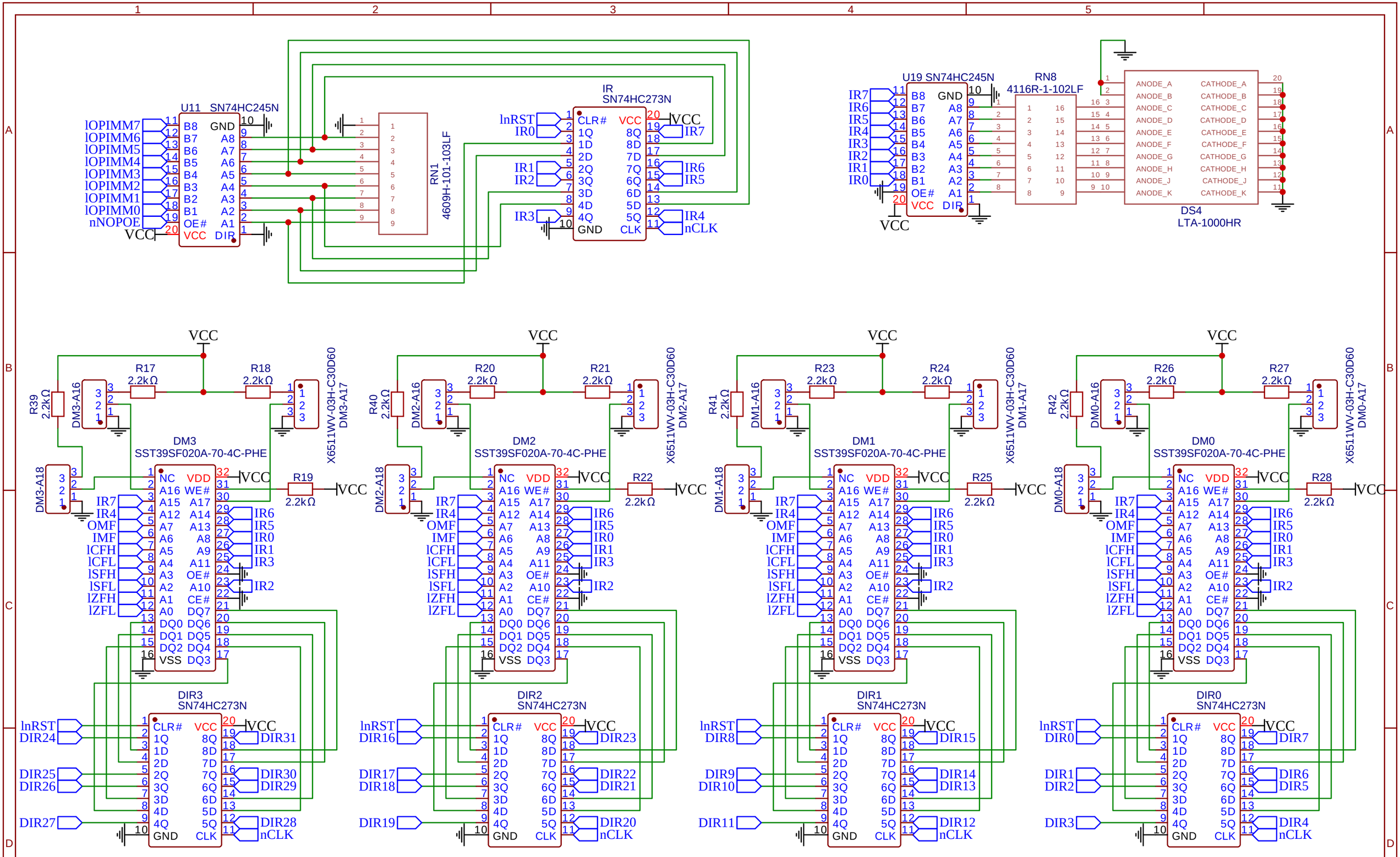

TITLE: Talos ES™ CTRL, decode

REV: 1.0

Company: The Byte Attic

Sheet: 3/6

Date: 2022-12-02

Drawn By: Bernardo Kastrup

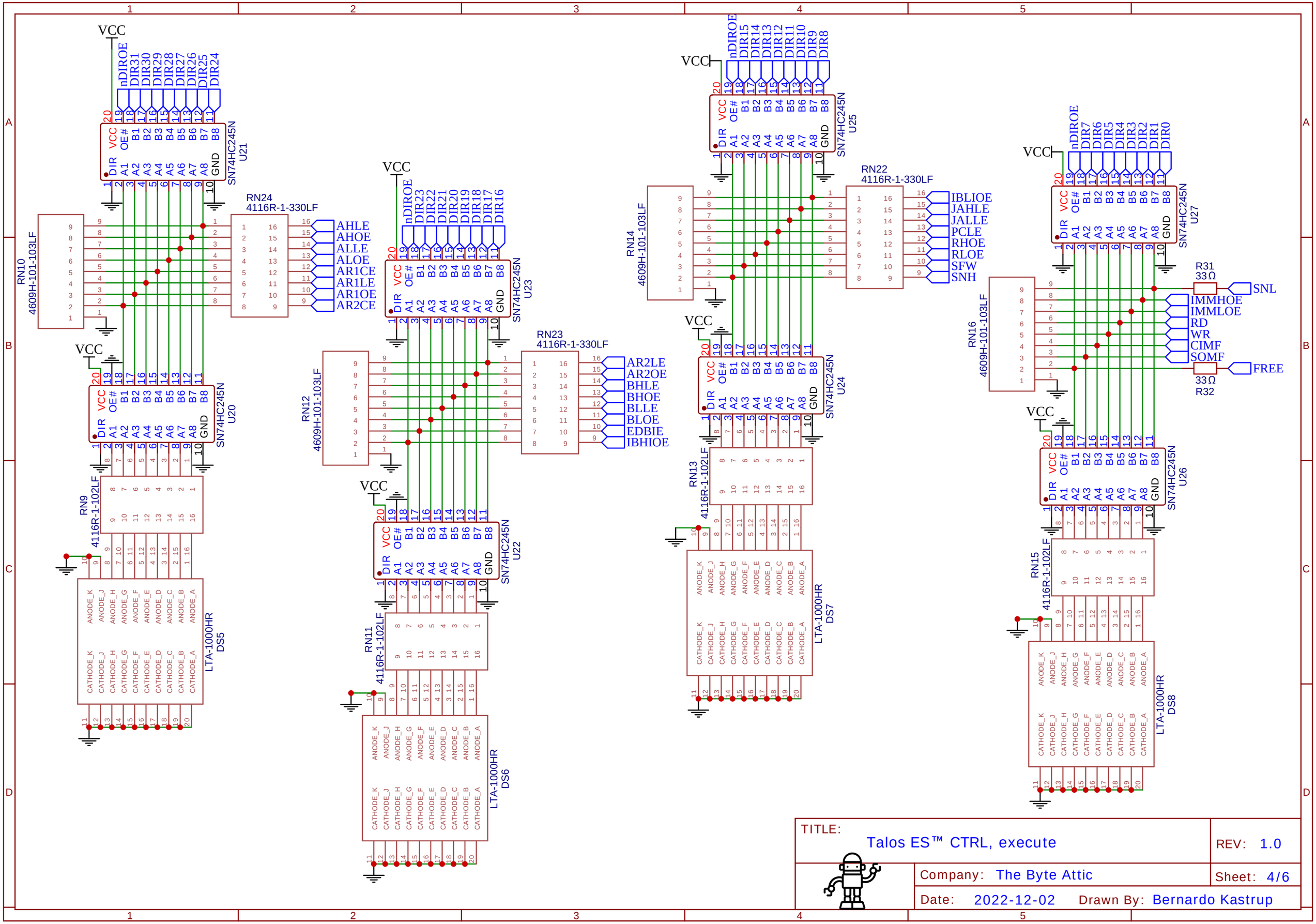
VCC
nDIROE
DIR31 DIR30 DIR29 DIR28 DIR27 DIR26 DIR25 DIR24
SN74HC245N U21
RN10 4609H-101-103LF
RN24 4116R-1-330LF
AHLE AHOE ALLE ALOE AR1CE AR1LE AR1OE AR2CE
SN74HC245N U20
RN9 4116R-1-102LF
LTA-1000HR DS5
DIR23 DIR22 DIR21 DIR20 DIR19 DIR18 DIR17 DIR16
SN74HC245N U23
RN12 4609H-101-103LF
RN23 4116R-1-330LF
AR2LE AR2OE BHLE BHOE BLLE BLOE EDBIE IBHIOE
SN74HC245N U22
RN11 4116R-1-102LF
LTA-1000HR DS6
DIR15 DIR14 DIR13 DIR12 DIR11 DIR10 DIR9 DIR8
SN74HC245N U25
RN14 4609H-101-103LF
RN22 4116R-1-330LF
IBLIOE JAHLE JALLE PCLE RHOE RLOE SFW SNH
SN74HC245N U24
RN13 4116R-1-102LF
LTA-1000HR DS7
DIR7 DIR6 DIR5 DIR4 DIR3 DIR2 DIR1 DIR0
SN74HC245N U27
RN16 4609H-101-103LF
R31 33Ω
SNL
IMMHOE IMMLOE RD WR CIMF SOMF
FREE
33Ω R32
SN74HC245N U26
RN15 4116R-1-102LF
LTA-1000HR DS8
TITLE:
Talos ES™ CTRL, execute
REV: 1.0
Company: The Byte Attic
Sheet: 4/6
Date: 2022-12-02
Drawn By: Bernardo Kastrup

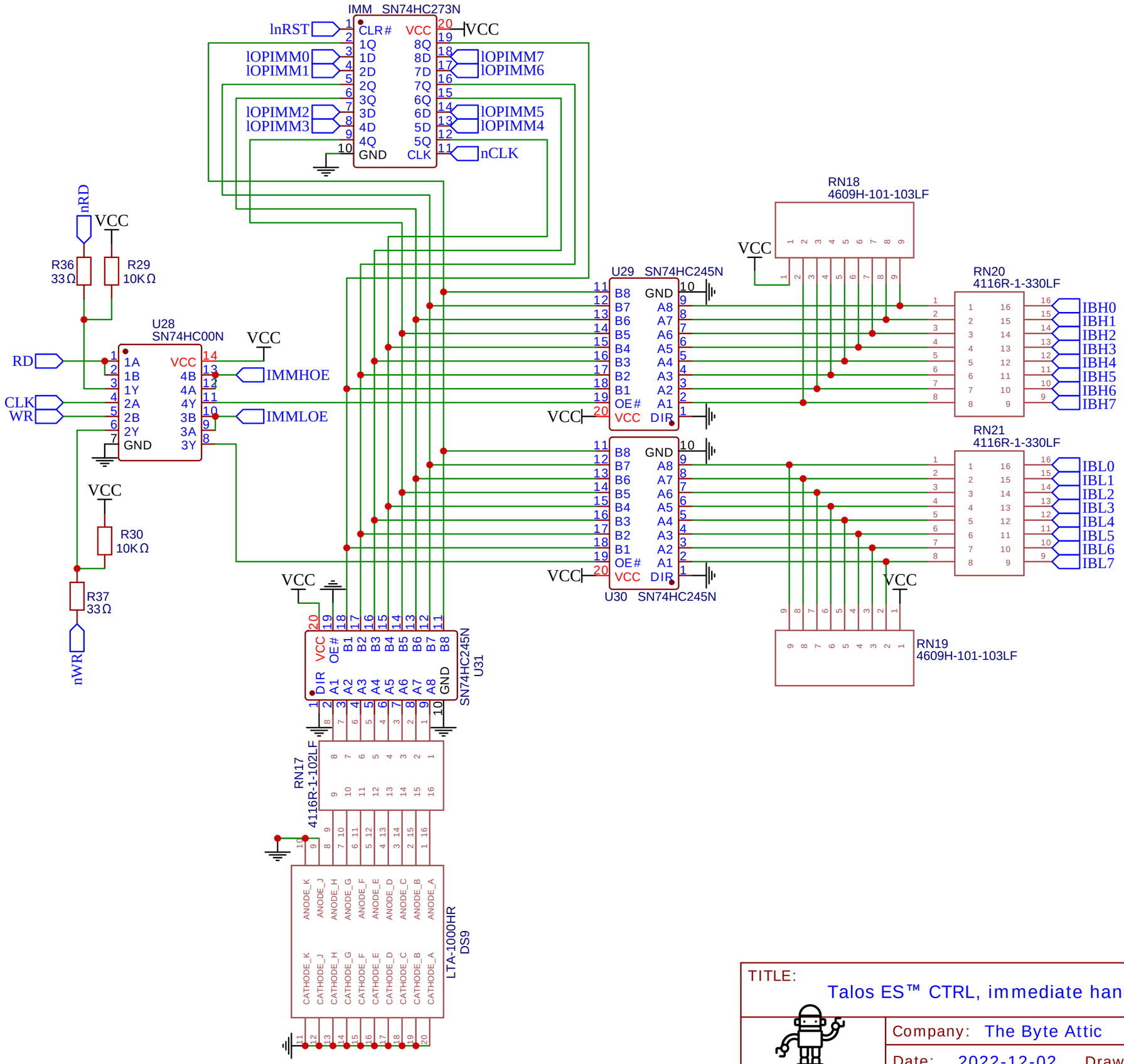

TITLE: Talos ES™ CTRL, immediate handling

REV: 1.0

Company: The Byte Attic

Sheet: 5/6

Date: 2022-12-02

Drawn By: Bernardo Kastrup

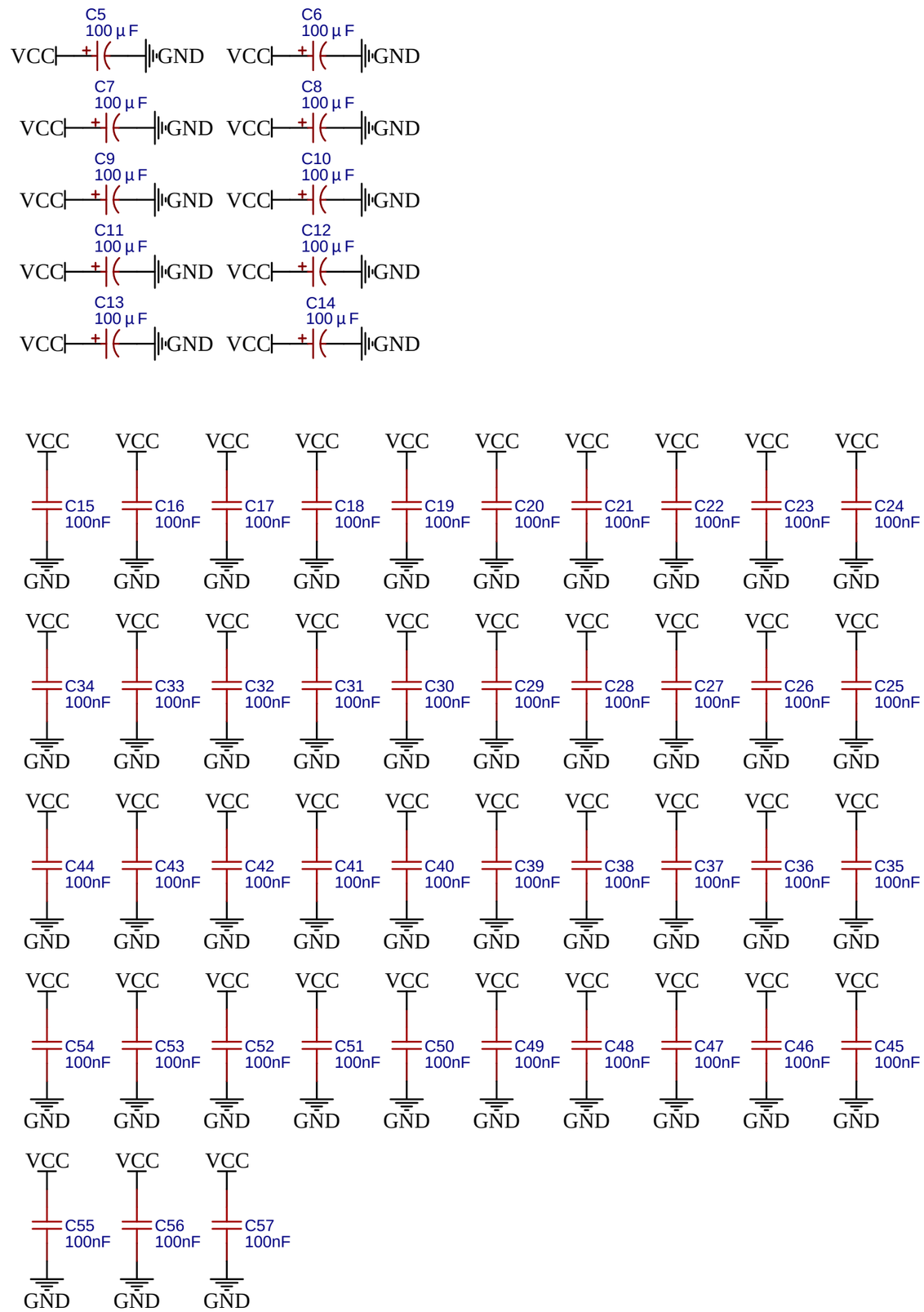

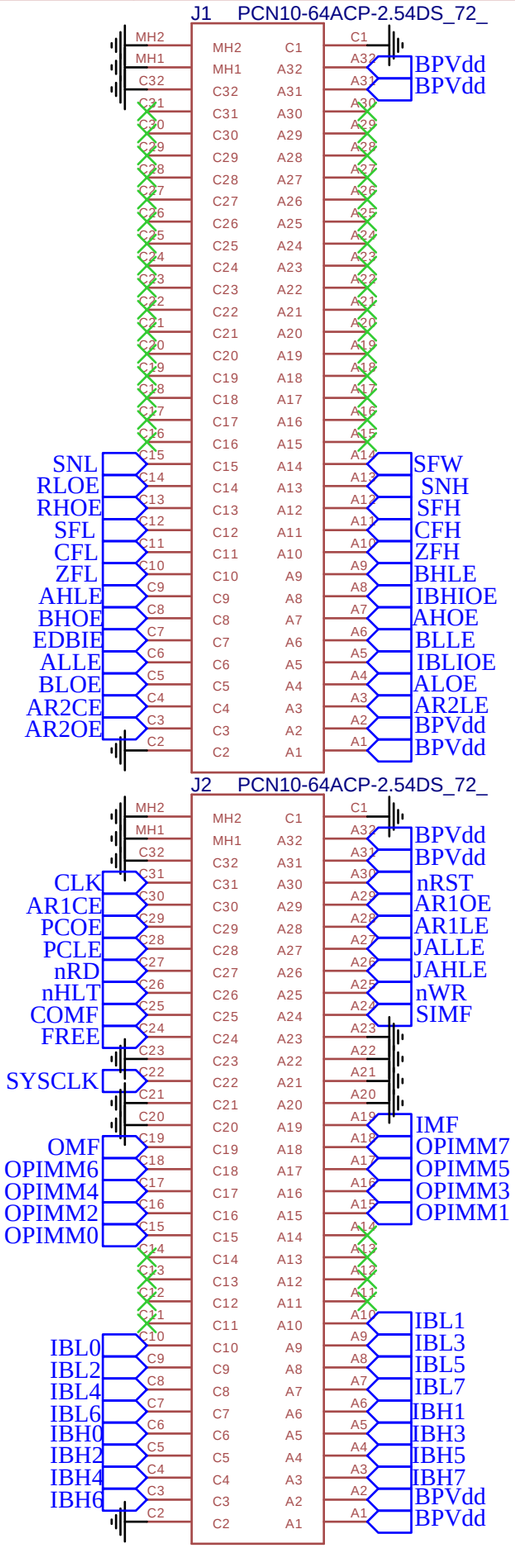

TITLE: Talos ES™ CTRL, I/Os	REV: 1.0
Company: The Byte Attic	Sheet: 6/6
Date: 2022-12-02 Drawn By: Bernardo Kastrup	