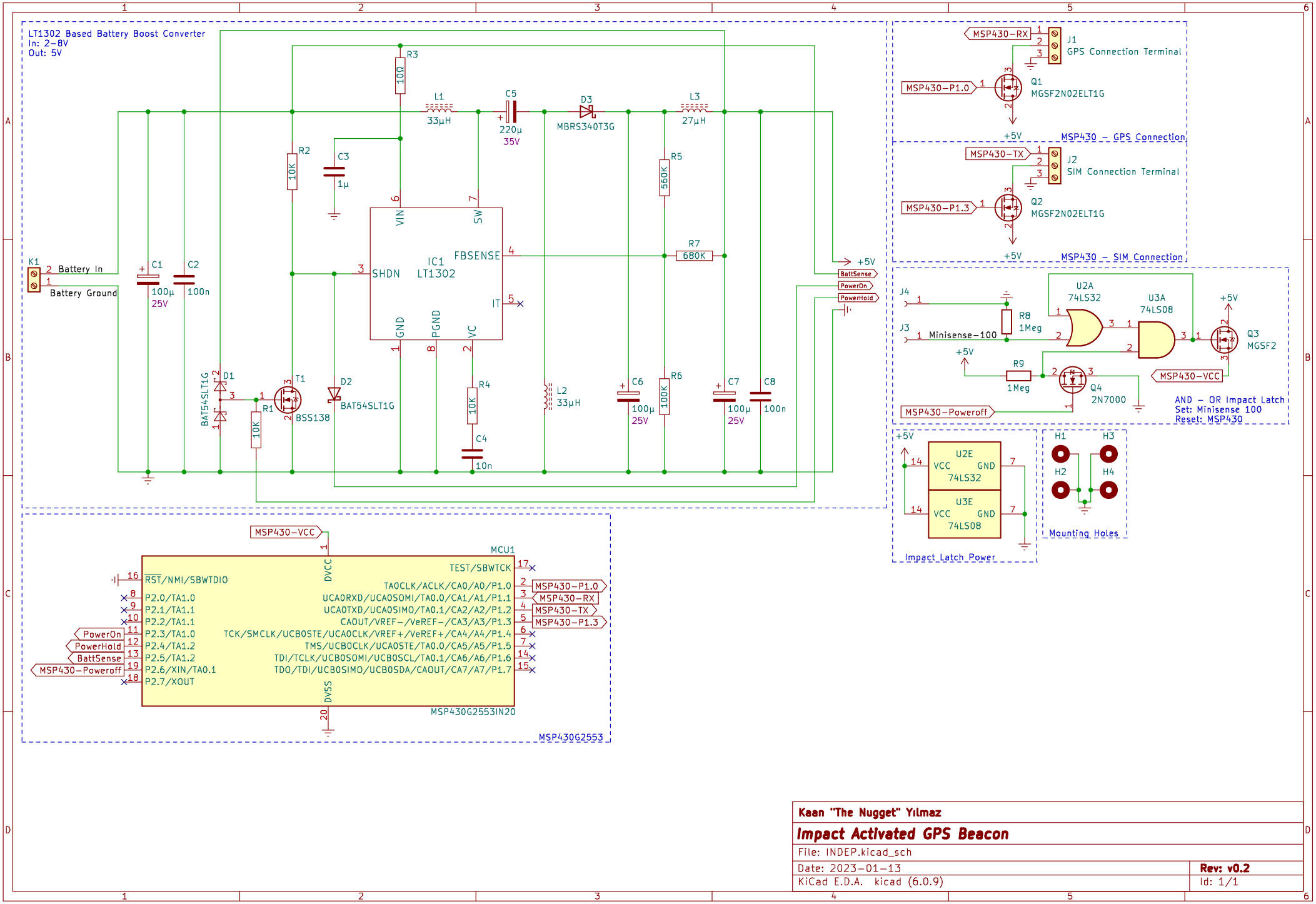

Kaan "The Nugget" Yılmaz	
Impact Activated GPS Beacon	
File: INDEP.kicad_sch	
Date: 2023-01-13	**Rev: v0.2**
KiCad E.D.A. kicad (6.0.9)	Id: 1/1