ECE 320
Old Test Questions
(Hubbard)

A) Which of the following is closest to the intrinsic carrier concentration of silicon at 300 K?

a: 2.1×10^{12} cm^{-3}
b: 1.5×10^{10} cm^{-3}
c: 3.7×10^{10} cm^{-3}
d: 1.7×10^{9} cm^{-3}
e: 5.1×10^{9} cm^{-3}

$\boxed{n_i = 1.5 \times 10^{10}\ cm^{-3}}$ for Si @ T = 300 K

(See Example 1.1 in text)

B) How much energy separates the valence and conduction bands in gallium arsenide? Choose the closest answer.

a: 1.1 eV
b: 1.4 eV
c: 0.66 eV
d: 1.1 J
e: 1.4 J

$\boxed{E_g = 1.4\ eV}$ for GaAs

(See Table 1.3 in text)

C) A sample of silicon at $T = 300$ K is doped with boron at a concentration of 1.30×10^{16} cm^{-3}. Which of the following is closest to the minority carrier concentration?

a: 1.5×10^{10} cm^{-3}
b: 1.3×10^{16} cm^{-3}
c: 8.1×10^{15} cm^{-3}
d: 1.7×10^{4} cm^{-3}
e: 1.1×10^{-4} cm^{-3}

Boron is an acceptor impurity

$\Rightarrow p_o \cong N_a = 1.30 \times 10^{16}\ cm^{-3}$

and free electrons are minority carriers.

$$\Rightarrow \boxed{n_o} = \frac{n_i^2}{p_o} \cong \frac{(1.5 \times 10^{10}\ cm^{-3})^2}{1.30 \times 10^{16}\ cm^{-3}} \cong \boxed{1.7 \times 10^{4}\ cm^{-3}}$$

D) A silicon pn junction at $T = 300$ K has a concentration of acceptor atoms in the p-region of 10^{16} cm^{-3} and a concentration of donor atoms in the n-region of 10^{15} cm^{-3}. Which of the following is closest to the built-in voltage of the junction?

a: 0.5 V
b: 0.8 V
c: 0.4 V
d: 0.7 V
e: 0.6 V

$$V_{bi} = V_T \ln\left(\frac{N_a N_d}{n_i^2}\right)$$

@ $T = 300$ K, $V_T \cong 0.026$ V

and $n_i = 1.5 \times 10^{10}\ cm^{-3}$ for Si

$$\Rightarrow \boxed{V_{bi}} \cong (0.026\ V) \ln\left(\frac{10^{16}\ cm^{-3} \cdot 10^{15}\ cm^{-3}}{(1.5 \times 10^{10}\ cm^{-3})^2}\right) \cong 0.637\ V$$

$$\cong \boxed{0.6\ V}$$

E) The reverse-bias saturation current of a pn junction diode is 10^{-14} A. The diode is forward biased with a voltage of 650 mV, and its temperature is 300 K. How much current flows through the diode? Choose the closest answer.

a: 650 μA
b: 720 mA
c: 720 μA
d: 650 mA
e: 2.4×10^{15} A

$$\boxed{I_D} = I_S\left[e^{V_D/V_T} - 1\right]$$

Note $V_T \cong 0.026\,V$ @ $T = 300\,K$

$$\cong (10^{-14}A)\left[e^{\left(\frac{0.650V}{0.026V}\right)} - 1\right]$$

$$\cong 7.20 \times 10^{-4}\,A = 720 \times 10^{-6}\,A$$

$$= \boxed{720\,\mu A}$$

F) The parameters of the diode in the circuit below are $V_\gamma = 0.7$ V and $r_f = 0$. Determine V_D. Choose the closest answer.

a: 0.7 V
b: −0.7 V
c: −1.5 V
d: 1.5 V
e: −0.8 V

Note polarity of V_B and polarity of diode.

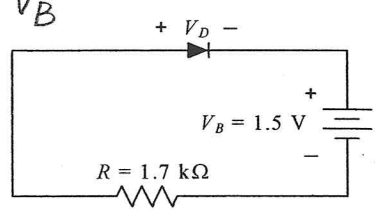

⇒ Diode is reverse biased (open circuit)

$$\Rightarrow \boxed{V_D} = -V_B = \boxed{-1.5\,V}$$

G) The parameters of the diode in the circuit below are $V_\gamma = 0.6$ V and $r_f = 0$, and $V_{PS} = 10.0$ V. Determine I_D. Choose the closest answer.

a: 9.1 A
b: 8.5 mA
c: 9.1 mA
d: 8.5 A
e: 0 A

Note polarity of V_{PS} and polarity of diode.

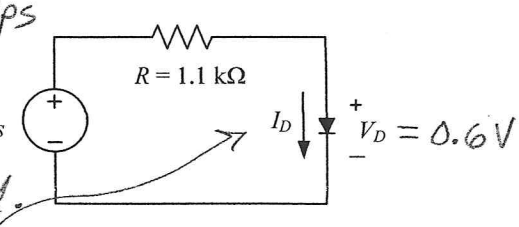

⇒ Diode is forward biased.

$r_f = 0 \Rightarrow V_D = V_\gamma = 0.6\,V$

$$\Rightarrow \boxed{I_D} = \frac{10V - 0.6V}{1.1\,K\Omega} \cong 8.545\,mA \cong \boxed{8.5\,mA}$$

H) The amplitude of $v_d(t)$ (the AC component of $v_D(t)$) in the circuit below is −0.25 V. Determine the diode's diffusion resistance, r_d.

a: $r_d = 5\,\Omega$
b: $r_d = 6\,\Omega$
c: $r_d = 0.6\,\Omega$
d: $r_d = 0.7\,\Omega$
e: $r_d = 26\,\Omega$

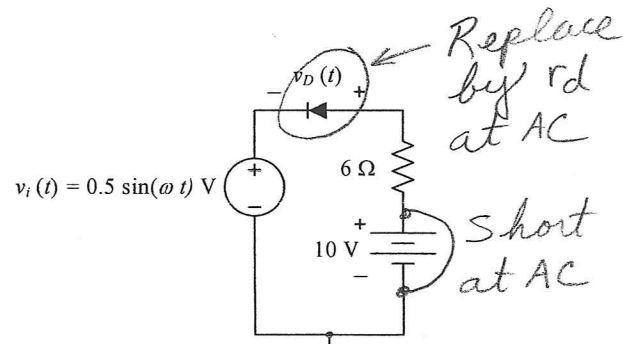

Voltage divider:

$$v_d(t) = -v_i(t)\left(\frac{r_d}{r_d + 6\Omega}\right)$$

$$\Rightarrow \cancel{-}(\cancel{-}0.25\,V) = (0.5\,V)\left(\frac{r_d}{r_d + 6\Omega}\right) \Rightarrow \frac{1}{2} = \frac{r_d}{r_d + 6\Omega} \Rightarrow \boxed{r_d = 6\,\Omega}$$

I) Which of the following forms a Schottky barrier diode?

a: A junction of intrinsic and n-type semiconductors
b: A junction of p-type and n-type semiconductors
c: A junction of metal and p-type semiconductor
d: A junction of metal and n-type semiconductor
e: A junction of intrinsic and p-type semiconductors

Schottky barrier diode

See sec. 1.5.4

J) Which of the following is true when germanium is doped with phosphorus?

a: The germanium becomes intrinsic.
b: A Zener diode is formed.
c: The phosphorus acts as an acceptor impurity.
d: Holes become the majority carriers.
e: Free electrons become the majority carriers.

Phosphorus is a donor impurity.
$\Rightarrow$ Free electrons are majority carriers.
(See sec. 1.1.2)

K) What is the name of the following circuit?

a: Voltage regulator
b: Half-wave rectifier
c: Magic smoke detector
d: Clipper
e: Full-wave bridge rectifier

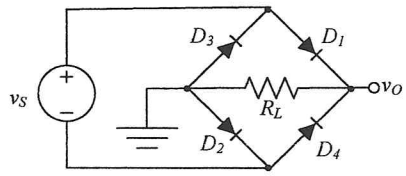

Full-wave bridge rectifier
(See sec. 2.1.2)

L) In the circuit shown below, V_{PS} varies between 12 and 15 V, $V_Z = 9$ V, and I_L varies between 150 and 180 mA. Assuming that $I_Z(\text{min}) = 0.1\ I_Z(\text{max})$, determine the value of $I_Z(\text{max})$. Choose the closest answer.

a: 75 mA
b: 188 mA
c: 263 mA
d: 233 mA
e: 233 μA

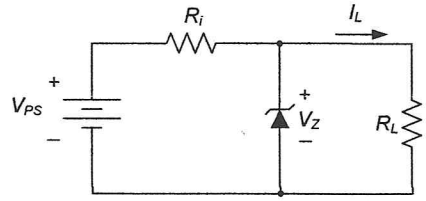

$$I_Z(max) = \frac{I_L(max)[V_{ps}(max) - V_Z] - I_L(min)[V_{ps}(min) - V_Z]}{V_{ps}(min) - 0.9V_Z - 0.1V_{ps}(max)}$$

$$= \frac{(180mA)[15V - 9V] - (150mA)[12V - 9V]}{12V - (0.9)(9V) - (0.1)(15V)} \cong \boxed{263mA}$$

M) During normal operation of a full-wave bridge rectifier, what is the maximum number of diodes that are forward biased at any time during the cycle?

a: 5
b: 2
c: 3
d: 4
e: 1

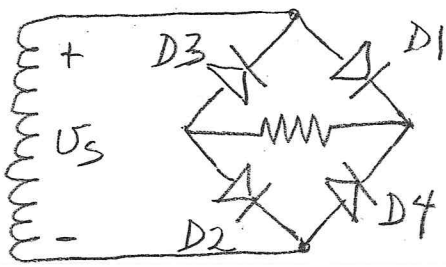

Either D1 and D2 are on (and D3, D4 off)

OR

D1 and D2 are off (and D3, D4 on).

$\Rightarrow$ Maximum of $\boxed{2}$ diodes forward biased

N) The cut-in voltage of the diode in the circuit shown below is 0 V. Determine the minimum acceptable value of C if the output's ripple voltage must not exceed 3 V. Choose the closest answer.

a: 23 mF
b: 46 mF
c: 23 μF
d: 23 pF
e: 46 μF

(Half-wave rectifier)

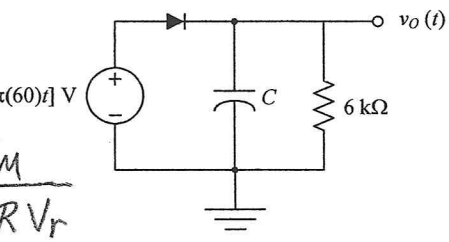

$$V_r = \frac{V_M}{fRC} \Rightarrow C = \frac{V_M}{fRV_r}$$

$$\Rightarrow \boxed{C_{min}} = \frac{50\,V}{(60\,Hz)(6\times10^3\,\Omega)(3V)} \cong 46\times10^{-6}\,F = \boxed{46\,\mu F}$$

O) The diode in the circuit below is not ideal. When specifying the circuit's load regulation, which of the following conditions is assumed?

a: $R_i = 0$
b: $I_Z(\text{min}) = 0$
c: $I_L(\text{min}) = 0.1\ I_L(\text{max})$
d: $V_{PS} = V_{PS}(\text{min})$
e: $V_{PS} = V_{PS}(\text{max})$

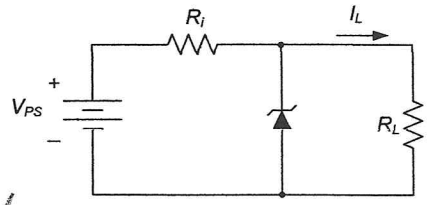

See Example 2.6 in text

Load regulation requires $\boxed{V_{PS} = V_{PS}(max)}$

P) The parameters of the diode in the circuit below are $V_\gamma = 0.6$ V and $r_f = 0$. Determine the value of the output voltage v_O when $v_I = 10$ V. Choose the closest answer.

a: $v_O = 3.6$ V
b: $v_O = 9.2$ V
c: $v_O = -5.6$ V
d: $v_O = 5.6$ V
e: $v_O = -3.6$ V

(Parallel-based clipper)

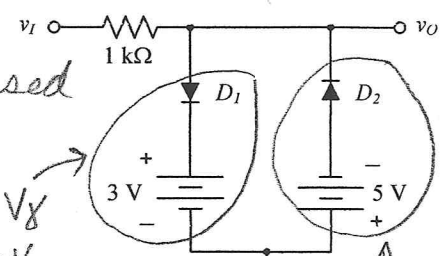

Clips when $v_I > 3V + V_\gamma = 3.6V$

Clips when $v_I < -5V - V_\gamma = -5.6V$

When $v_I = 10V > 3.6V$,

$\boxed{v_o = 3.6V}$

Q) What is the minimum number of diodes required to build a full-wave rectifier?

a: 1
b: 4
c: 3
d: 2
e: 5

See text Figure 2.5 for full-wave rectifier with $\boxed{2}$ diodes.

R) What three functions are performed by a traditional DC power supply?

a: Half-wave rectification, full-wave rectification, and voltage doubling
b: Voltage limiting, current limiting, and doping
c: Detection, voltage doubling, and avalanche breakdown
d: Rectification, filtering, and voltage regulation
e: Voltage division, current division, and power division

Power supply: (See introduction to sec. 2.1)

→ Rectifier → Filter → Voltage regulator →

S) The cut-in voltage of the diode in the circuit shown below is 0 V. Determine the diode's peak inverse voltage (maximum reverse-bias voltage).

a: 0 V
b: 6 V
c: 30 V
d: 60 V
e: 20 V

(Half-wave rectifier)

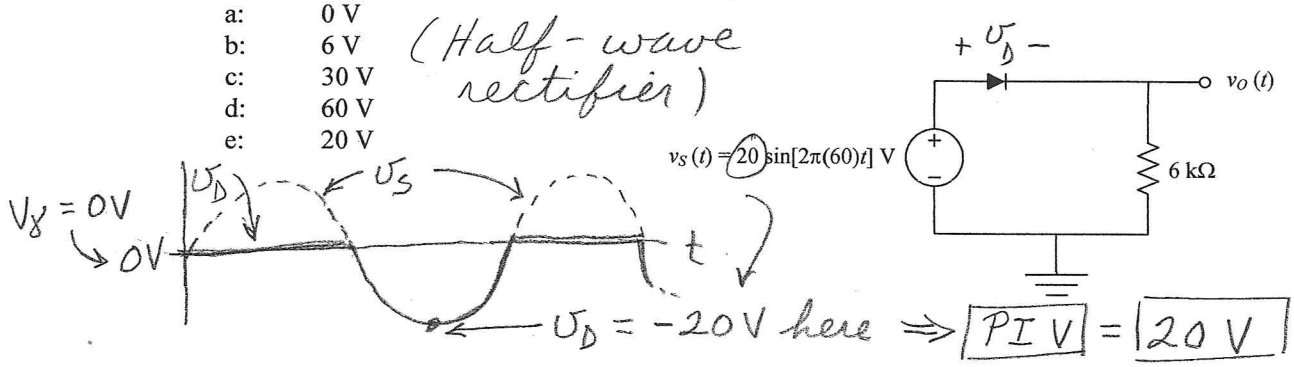

T) Which of the following is used to eliminate portions of a signal that exceed a certain voltage?

a: Center-tapped transformer
b: Clipper
c: Filter
d: Ripple detector
e: Voltage doubler

Clipper circuits are used for this purpose. (See sec. 2.3.1)

A) The parameters of the diodes in the circuit below are $V_\gamma = 0.7$ V and $r_f = 0$. Determine the value of the output voltage v_O when $v_I = -5$ V. Choose the closest answer.

a: –4.3 V
b: 1.3 V
c: 3.3 V
d: 4.7 V
e: –2.7 V

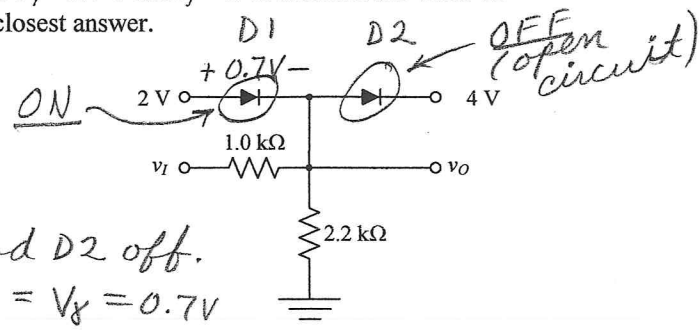

When $v_I = -5$ V, D1 is on and D2 off.

$\Rightarrow$ Voltage drop across D1 $= V_\gamma = 0.7$V

$\Rightarrow \boxed{v_O} = 2V - 0.7V = \boxed{1.3V}$

B) The parameters of the diodes in the circuit below are $V_\gamma = 0.7$ V and $r_f = 0$. Which of the following conditions is impossible for this circuit?

a: Both diodes are off.
b: Both diodes are on.
c: One diode is on and the other is off.
d: The output voltage is positive.
e: Current flows through both resistors.

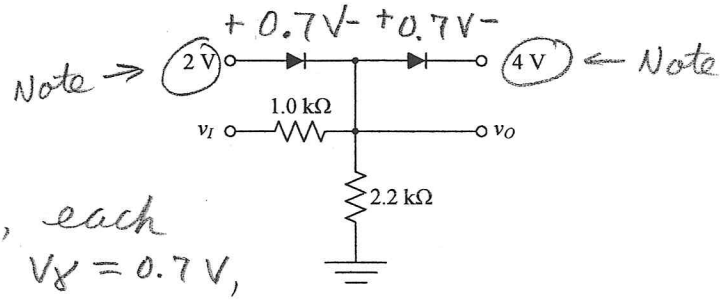

If both diodes were on, each would have a drop of $V_\gamma = 0.7$ V, but $2V - 4V \neq 2(0.7V) = 1.4V$

$\Rightarrow$ $\boxed{\text{It is impossible for both diodes to be on.}}$

C) The common-emitter current gain (β) of a bipolar junction transistor is equal to 200. Determine the value of the transistor's common-base current gain (α). Choose the closest answer.

a: 0.9868
b: 1.0050
c: 201
d: 0.9950
e: 5.03×10^{-3}

$$\boxed{\alpha} = \frac{\beta}{1+\beta} = \frac{200}{201}$$

$$\cong \boxed{0.9950}$$

D) Which of the following elements might be used to dope the base of a silicon npn transistor?

a: arsenic
b: phosphorus
c: antimony
d: germanium
e: boron

Base is p-type

$\Rightarrow$ Must be doped with an acceptor impurity

$\Rightarrow$ $\boxed{\text{boron}}$

E) A pnp transistor having $\beta = 100$ is operating in saturation. If the base current is 33.2 μA and the emitter current is 2.48 mA, determine the collector current. Choose the closest answer.

a: 3.32 μA
b: 3.32 mA
c: 2.45 mA
d: 33.2 mA
e: 2.51 mA

$I_E = I_B + I_C$ (regardless of mode)

$\Rightarrow \boxed{I_C} = I_E - I_B$

$= 2.48\,mA - 0.0332\,mA$

$= 2.4468\,mA \cong \boxed{2.45\,mA}$

F) The transistor in the circuit below is operating in saturation. Determine the collector current. Choose the closest answer.

a: 20.0 mA
b: 18.6 mA
c: 19.6 mA
d: 3.5 mA
e: −0.7 mA

$V_{CE} = V_{CE}(sat) = 0.2V$

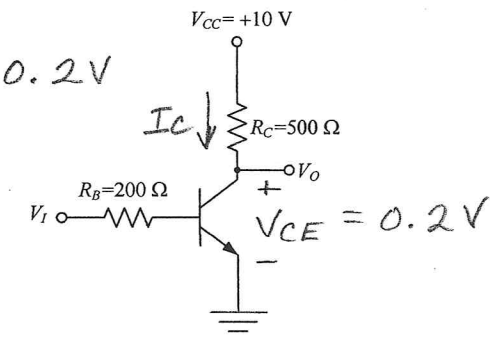

$\boxed{I_C} = \frac{V_{CC} - V_{CE}}{R_C} = \frac{10V - 0.2V}{0.5\,K\Omega}$

$= \boxed{19.6\,mA}$

G) The transistor in the circuit below is operating at the center of the load line. If $\beta = 60$ and the collector current is 2 mA, determine the value of R_C. Choose the closest answer.

a: 12.0 kΩ
b: 6.0 kΩ
c: 11.9 kΩ
d: 11.7 kΩ
e: 700 kΩ

At center of load line, $V_{CE} = V_{CC}/2 = 12V$

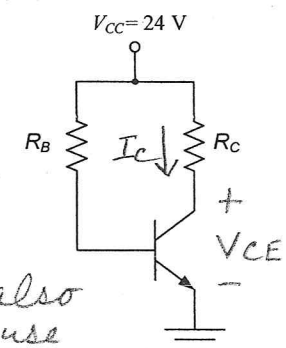

$\boxed{R_C} = \frac{V_{CC} - V_{CE}}{I_C} = \frac{24V - 12V}{2\,mA}$

$= \boxed{6\,K\Omega}$

(Note, also could use $I_C = V_{CC}/2R_C$)

H) The transistor in the circuit below is intended to function as a switch. Which of the following should be true when the switch is closed?

a: The transistor is in the forward-active mode.
b: The transistor is in saturation.
c: The transistor is in cutoff.
d: Electrons flow out of the emitter.
e: $V_{BE} = 0.2$ V.

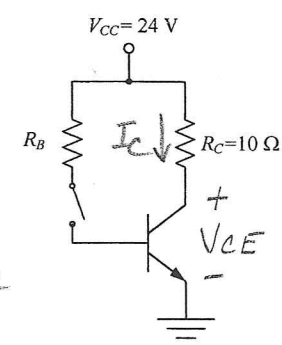

A closed switch should have the minimum possible voltage drop across its terminals.

$\Rightarrow V_{CE}$ must equal $V_{CE}(sat)$ $\Rightarrow$ Transistor is in saturation.

I) The output resistance (looking into the collector) of a bipolar junction transistor is300 kΩ when the collector current is 1 mA. Determine the value of the transistor's Early voltage. Choose the closest answer.

a: 0.7 V
b: 0.2 V
c: 30 V
d: 300 V
e: 0.026 V

$$r_o = \frac{V_A}{I_C} \Rightarrow \boxed{V_A} = I_C r_o$$
$$= (1\,mA)(300\,k\Omega)$$
$$= \boxed{300\,V}$$

J) Which of the following is a major shortcoming of the single base resistor biasing method?

a: A very small value of R_B is required.
b: The method cannot be used to bias npn transistors.
c: The method cannot be used to bias pnp transistors.
d: The Early effect limits the value of the collector current.
e: The Q-point is highly dependent on the value of β.

See design example 5.14 in text

$\Rightarrow$ $\boxed{\text{Q-point is highly dependent on } \beta}$

K) For the transistor in the circuit below, $\beta = 50$. Determine the base current. Choose the best answer.

a: 0.25 mA
b: 0.035 mA
c: 1.0 mA
d: 0 mA
e: 0.215 mA

$5V - 0V > 0.7V = V_{EB}(on)$

$\Rightarrow$ Transistor is not in cutoff.

$\Rightarrow V_{EB} = V_{EB}(on) = 0.7V$

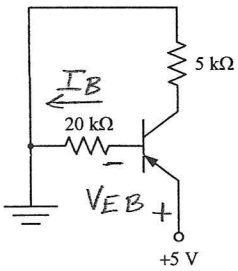

$$\boxed{I_B} = \frac{5V - V_{EB}(on) - 0}{20\,k\Omega} = \frac{4.3V}{20\,k\Omega}$$
$$= \boxed{0.215\,mA}$$

L) Which of the following values are not needed to determine whether the circuit below is bias stable? Choose the best answer.

a: R_1
b: R_2
c: R_C
d: R_E
e: β

Bias stability requires

$$R_{TH} \le 0.1(1+\beta)R_E$$

where $R_{TH} = R_1 \| R_2$

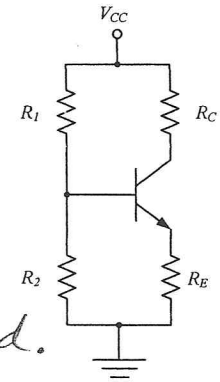

$\Rightarrow R_1, R_2, \beta$, and R_E are needed.

$\Rightarrow$ $\boxed{R_C \text{ is not needed.}}$

M) Which of the following is a major advantage of the voltage divider biasing method compared to the single base resistor biasing method?

a: The voltage divider method requires fewer components.
b: The Q-point is relatively insensitive to the value of β in the voltage divider method.
c: The voltage divider method allows higher currents to flow.
d: The transistor dissipates less power in the voltage divider method.
e: The voltage divider method allows larger resistors to be used.

See section 5.4.2 in text.

$\boxed{\text{The Q-point is relatively insensitive to } \beta.}$

N) Which of the following has the least influence on the small-signal AC input resistance of the circuit below? Choose the best answer.

a: R_1
b: R_2
c: R_E
d: β
e: R_C

Common emitter amplifier with emitter resistor (see sec. 6.4.2)

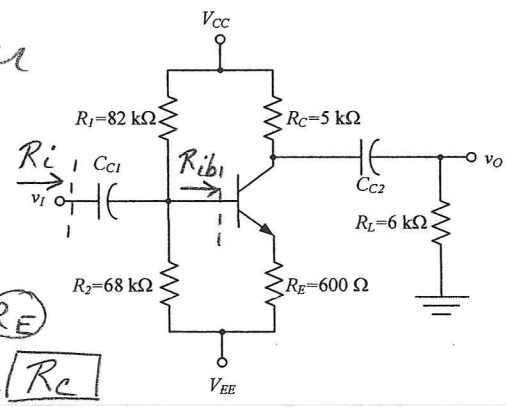

$\Rightarrow R_i = R_1 \| R_2 \| R_{ib}$,
where $R_{ib} = r_\pi + (1+\beta) R_E$

$\Rightarrow R_i$ does not depend on $\boxed{R_C}$

O) For the transistor in the amplifier below, $V_A = 100$ V. In the small-signal ac equivalent circuit for the amplifier, which of the following components is not connected to ground?

a: R_1
b: r_π
c: R_C
d: r_o
e: R_2

Small-signal, AC equivalent circuit:

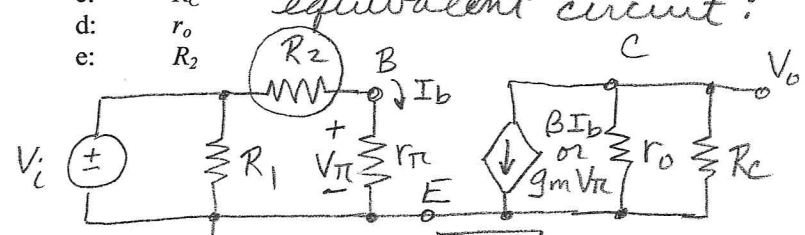

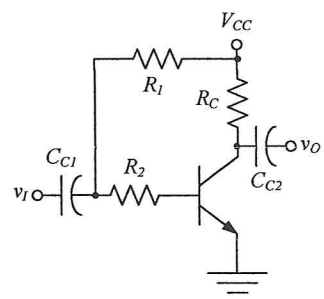

Note $\boxed{R_2}$ is not connected to ground.

P) Which of the following is an approximate value for the small-signal voltage gain of the circuit below? Choose the closest answer.

a: −3.33
b: +1.78
c: −40
d: +150
e: −125

Common emitter amplifier with emitter resistor (Sec. 6.4.2)

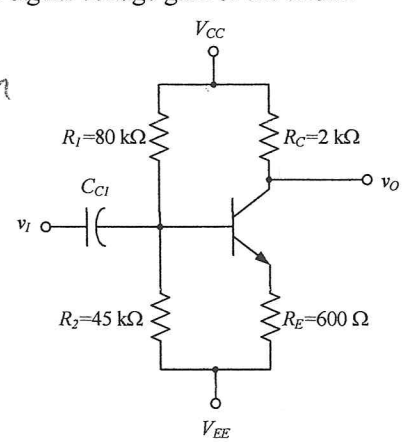

$$\boxed{A_v} \cong -\frac{R_C}{R_E} = -\frac{2\,\text{k}\Omega}{0.6\,\text{k}\Omega}$$

$$\cong \boxed{-3.33}$$

Q) An npn BJT with $V_A = 100$ V and $\beta = 110$ is biased in the forward-active mode with quiescent collector current of 0.75 mA. The transistor's temperature is 300 K. Which of the following is closest to the value of g_m?

a: 11.0 mA/V
b: 27.3 mA/V
c: 35.2 mA/V
d: 28.8 mA/V
e: 75.0 mA/V

$$\boxed{g_m} = \frac{I_{CQ}}{V_T} \cong \frac{0.75\,mA}{0.026\,V} \cong \boxed{28.8\ \frac{mA}{V}}$$

R) What of the following effects is caused by adding an emitter resistor to a common emitter amplifier?

a: The emitter resistor decreases the amplifier's input resistance.
b: The emitter resistor increases the amplifier's voltage gain.
c: The emitter resistor decreases the amplifier's bias stability.
d: The emitter resistor increases the amplifier's input resistance.
e: The emitter resistor increases the transistor's Early voltage.

(emitter resistor)

Resistance reflection rule: $R_{ib} = r_\pi + (1+\beta) R_E$

$\Rightarrow$ Emitter resistor increases input resistance

S) For the transistor in the circuit below, $V_A = \infty$, $g_m = 30$ mA/V, and $r_\pi = 2$ kΩ. Which of the following is closest to the small-signal voltage gain of the circuit?

a: −4
b: −45
c: −150
d: +150
e: −60

$$A_v = \frac{V_o}{V_i} = \frac{-g_m V_\pi R_C}{V_\pi} = -g_m R_C = -(30\,\cancel{mA}/\cancel{V})(2\,\cancel{k\Omega})$$

$\Rightarrow \boxed{A_v = -60}$

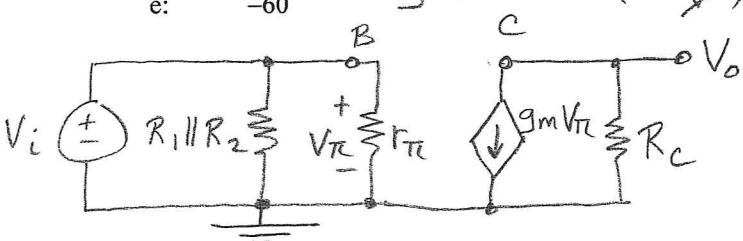

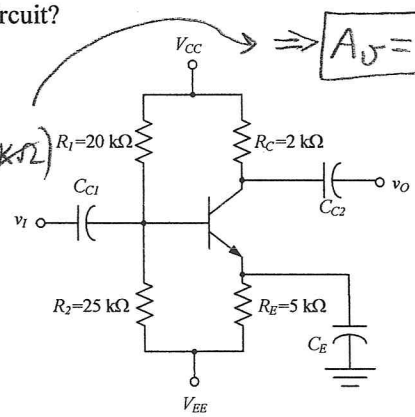

T) Which of the following conditions is preferred for a current amplifier?

a: Low input resistance and low output resistance
b: Low input resistance and high output resistance
c: High input resistance and low output resistance
d: High input resistance and high output resistance
e: Moderate input resistance and moderate output resistance

(See sec. 6.3 in text)

Current amplifier should have small R_i and large R_o.

Q) Which of the following is an approximate value for the small-signal voltage gain of the circuit below? Choose the closest answer.

a: −33.3
b: +1.78
c: −4.00
d: +150
e: −125

Common emitter amplifier with emitter resistor (Sec. 6.4.2)

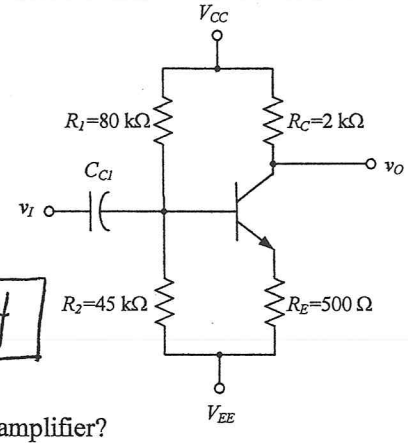

$$A_v \cong -\frac{R_C}{R_E} = \frac{-2\,k\Omega}{0.5\,k\Omega} = \boxed{-4}$$

R) Which of the following conditions is preferred for a current amplifier?

a: Low input resistance and low output resistance
b: Low input resistance and high output resistance
c: High input resistance and low output resistance
d: High input resistance and high output resistance
e: Moderate input resistance and moderate output resistance

(Sec. 6.3 in text)

Current amplifier should have $\boxed{\text{small } R_i \text{ and large } R_o}$

S) An n-channel MOSFET has parameters $V_{TN} = 1.7$ V, $K_n = 0.2$ mA/V^2, and $\lambda = 0$. If $V_{GS} = 7$ V and $V_{DS} = 2$ V, which of the following is closest to the value of the transistor's drain current?

a: 5.6 mA
b: 0 mA
c: 1.1 mA
d: 2.0 mA
e: 3.4 mA

(Note $V_{TN} > 0 \Rightarrow$ enhancement mode)

$V_{DS}(sat) = V_{GS} - V_{TN} = 7V - 1.7V = 5.3V$

$V_{DS} = 2V < V_{DS}(sat) \Rightarrow$ Nonsaturation

$$\Rightarrow I_D = K_n\left[2(V_{GS} - V_{TN})V_{DS} - V_{DS}^2\right]$$

$$= \left(0.2\,\frac{mA}{V^2}\right)\left[2(5.3V)(2V) - (2V)^2\right] = 3.44\,mA \cong \boxed{3.4\,mA}$$

T) The drain current in a p-channel MOSFET is 0.5 mA. The transistor's parameters are $V_{TP} = 0.5$ V, $K_p = 0.2$ mA/V^2, and $\lambda = 0$. Which of the following is closest to the minimum value of V_{SD} required to bias the transistor in the saturation region?

a: 0.5 V
b: 1.6 V
c: 1.1 V
d: 2.1 V
e: 0.1 V

In saturation, $I_D = K_p(V_{SG} + V_{TP})^2$

$$\Rightarrow 0.5\,mA = \left(0.2\,\frac{mA}{V^2}\right)(V_{SG} + 0.5V)^2$$

$$\Rightarrow V_{SG} = \sqrt{\frac{0.5}{0.2}} - 0.5\,V \cong 1.08V$$

$$V_{SD}(sat) = V_{SG} + V_{TP} \cong 1.08V + 0.5V = 1.58\,V \cong 1.6V$$

$$\Rightarrow \boxed{\text{Minimum } V_{SD} \cong 1.6\,V}$$

U) For the transistor in the circuit below, the parameters are $V_{TN} = 0.8$ V, $K_n = 0.5$ mA/V^2, and $\lambda = 0$. Which of the following is closest to the value of transistor's gate current?

a: 12.1 μA
b: 0.37 mA
c: 0 mA
d: 3.7 mA
e: 12.1 mA

No current flows into gate of MOSFET at DC

$\Rightarrow$ $\boxed{0 \text{ mA}}$

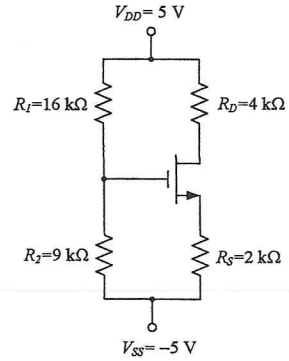

V) For an n-channel MOSFET operating in the saturation region, $V_{TN} = 0.6$ V, $K_n = 0.9$ mA/V^2, $\lambda = 0.02$ V^{-1}, and $I_{DQ} = 0.7$ mA. Which of the following is closest to the value of r_o?

a: 50 kΩ
b: 70 kΩ
c: 90 kΩ
d: 110 kΩ
e: 130 kΩ

$$r_o = \frac{1}{\lambda I_{DQ}} = \frac{1}{(0.02\,V^{-1})(0.7\,mA)}$$

$$\cong 71.4\ k\Omega$$

$$\cong \boxed{70\ k\Omega}$$

W) For the transistor in the circuit below, $g_m = 0.9$ mA/V and $r_o = \infty$. Which of the following is closest to the small-signal voltage gain of the circuit?

a: +45
b: −45
c: −4.5
d: +4.5
e: −100

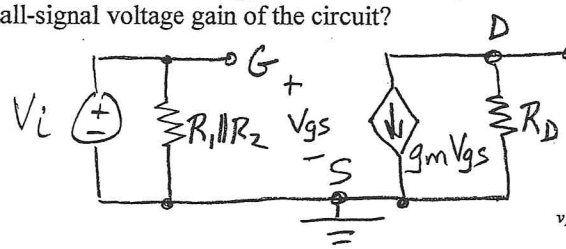

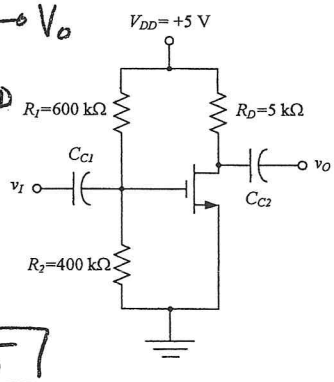

$$A_v = \frac{V_o}{V_i} = \frac{-g_m \cancel{V_{gs}} R_D}{\cancel{V_{gs}}} = -g_m R_D$$

$$= -\left(0.9\,\frac{mA}{V}\right)(5\,k\Omega) = \boxed{-4.5}$$

X) What of the following is caused by adding a source resistor to a common source amplifier?

a: The source resistor decreases the amplifier's input resistance.
b: The source resistor increases the amplifier's voltage gain.
c: The source resistor decreases the amplifier's bias stability.
d: The source resistor has no effect on the amplifier's input resistance.
e: The source resistor increases the transistor's Early voltage.

(Section 4.3.2 in text)

No current flows into gate of MOSFET

$\Rightarrow$ Source resistor has no effect on R_i.

Y) For the transistors in the circuit below, $V_{TN} = 1$ V, $V_{TP} = -2$ V, and $K_N = K_P = 0.25$ mA/V^2. The circuit's input is a clock signal which cycles between $v_I = 0$ V and $v_I = 10$ V. Which of the following is true?

a: Current flows through the NMOS transistor when $v_I = 10$ V.
b: Current flows through the PMOS transistor when $v_I = 10$ V.
c: Current flows through both transistors during the clock transitions.
d: The circuit's power dissipation is independent of clock frequency.
e: No current ever flows through either transistor.

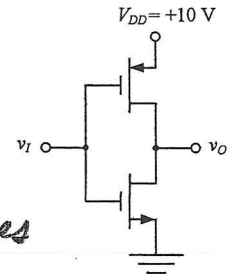

CMOS Inverter (Sec. 16.3 in text)
Current flows through both devices on clock transitions.