41

Name: Solutions

ECE 438/638: Computer Communications — **Spring 2011**

Exam 2 (Each of the 4 problems is worth 25 points) — **Thursday, April 14**

Graduate students (638): For problem 1, you only need to answer any 8 of the short answer questions.

Undergraduate students (438): For problem 1, you only need to answer any 5 of the short answer questions. Extra credit earned on any extra answers will be added to your total homework score.

1 Short Answer. Your answer to each question should be twenty words or less.

1.1 The following four IP packets have been received at a destination node. The packets are part of the same original IP packet, but the original packet was fragmented. Have all of the fragments been received? Justify your answer by describing how the fragments are reassembled or describing what portion or portions of the packet is missing.

No

Packet no.	Source IP address	Fragment ID	M bit	Offset	Bytes of data
1	192.168.1.1	45	0	192	256
2	192.168.1.1	45	1	0	512
3	192.168.1.1	45	1	128	512
4	192.168.1.1	45	1	64	256

Offset	Pkt #	Size	words
0	2	512	64
64	4	256	32
96	—		32
128	3	512	64
192	1	256	—

missing fragment starting at offset 96 containing 256 Bytes (or 32 words)

1.2 In the distributed spanning tree algorithm, why does the root bridge periodically send configuration messages even after the system has stabilized?

So that if a bridge or link fails, down stream bridges can detect the failure and restart the election algorithm

1.3 An autonomous system (AS), such as a large corporation, may have connections to more than one other AS, but it may refuse to carry transit traffic. With BGP, how does the AS implement a policy of not providing transit?

CH?

To implement a policy of not providing transit, the BGP speaker does not advertise routes to prefixes that are not contained within its AS.

1.4 IPv6 provides a 128-bit address space, compared to the 32-bit class-based address space with IPv4. How does IPv6 address scaling concerns given that there are so many more possible address allocations?

CH4

Like IPv4, IPv6 controls routing table size by using classless address space (i.e., CIDR)

Careful planning of address prefix assignments is needed.

1.5 A network that employs virtual-circuit forwarding must have a protocol to setup the virtual circuit before it can be utilized. One of the tasks during the setup phase is to assign the local virtual-circuit identifier (VCI) at each switch. Once the virtual circuit is setup, the packets are forwarded based on the VCI. How is the setup packet forwarded given that the local VCI's have not yet been established?

Setup requests are routed like datagrams, using destination-based routing

1.6 A host has one network connection to a wired LAN, and there are two routers, R1 and R2, that are also attached to this LAN. The forwarding table for the host is configured with a single default router, R1. Suppose a particular destination is reachable through router R2 only (this implies that when R1 receives a packet for this destination it forwards the packet to R2). Describe the mechanism that is available with IP so the host can send packets for this destination directly to R2.

ICMP-Redirect. R1 sends ICMP to host informing it to add a route to its forwarding table to R2 for this destination

1.7 Mobile IP is designed to work without any changes to non-mobile hosts and the majority of routers. Describe how a packet for a mobile host is forwarded from the home agent to the foreign agent given that none of the routers between these agents have been changed.

The foreign agent sends care-of-address to home agent. The home agent tunnels the packets to the foreign agent.

1.8 What does a host do when it receives an ARP packet from an unknown host to a second unknown host?

it ignores the ARP packet (to avoid cluttering its ARP table)

1.9 The link-state algorithm requires that link-state packets (LSP's) be reliably flooded to all other routers. If a router receives an LSP from a neighbor *X*, how does it (a) determine if it should forward the LSP and (b) to which neighbors does it send the LSP?

(a) if the sequence number is larger than stored in local LSP-database (and LSP has not timed out)

(b) all neighbors except for nbr X.

1.10 Protocol-independent multicast (PIM) was developed in response to the scaling problems of earlier protocols. On common problem with multicast protocols is how to determine if a router should participate in the multicast distribution tree. How does the PIM sparse mode (PIM-SM) handle determining if a router should join the tree?

A router explicitly adds itself to tree by sending join message to rendezvous point (RP). Routers that forward join messages add themselves to the tree.

2 Spanning Tree Algorithm for Intelligent Bridges.

Suppose the spanning tree algorithm is used for the network shown to the right. The seven bridges numbered 1 to 7 run the spanning tree algorithm. Router R1 is connected to LAN E and provides a connection to the Internet.

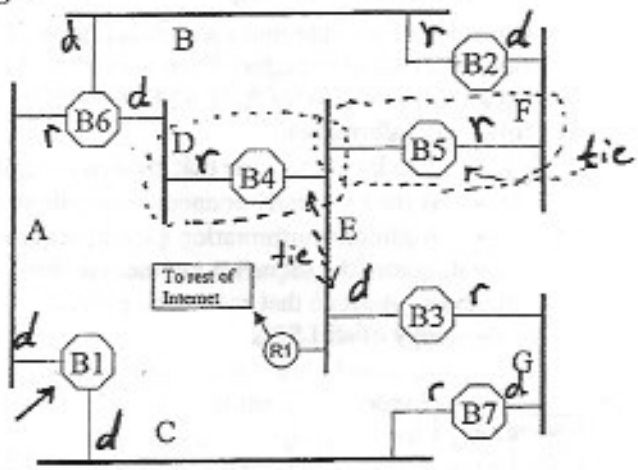

2.1 Indicate on the figure the spanning tree. Be sure to indicate the root port for each bridge (except the root bridge), the designated port for each LAN, and the links and bridges that do not participate in forwarding data frames.

B4 and B5 do not forward root data frames.

Notice tree is not balanced.

2.2 Assume that hosts attached to LAN's A, B, and C generate traffic with destinations found through the router to the rest of the network. Renumber the bridges so that the traffic from the hosts on LAN A traverses LAN D to LAN E, LAN B traverses LAN F to E, and LAN C traverses LAN G to E. Draw the resulting spanning tree in the figure below including the new bridge numbers and root and designated ports. You can only change the numbers assigned to the bridges (e.g., links cannot be moved and no new links can be added).

many solutions are possible

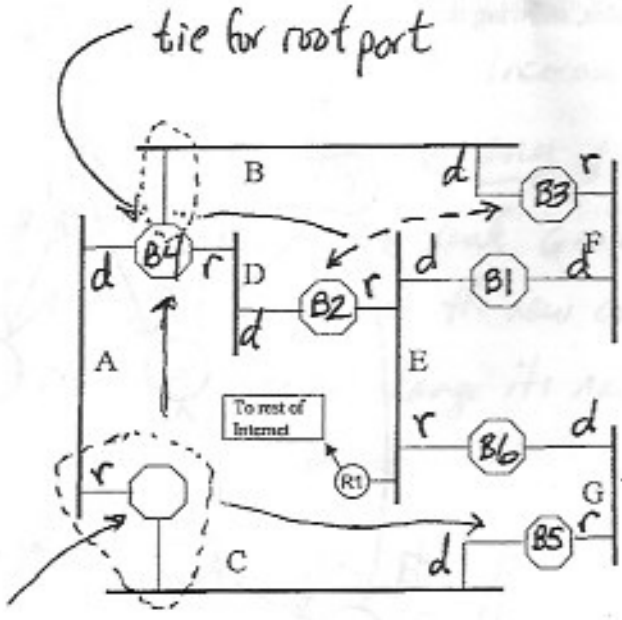

3 Link-state routing.

Consider a link-state routing protocol in which each node generates link-state packets (LSP's) that are flooded to all other nodes. Each node should maintain an up-to-date database of LSP's. Consider a network that has nodes A, B, C, D, E, F, G, H, I and J. Each node generates a LSP that contains the following information.

- The ID of the node that created the LSP
- A list of directly connected neighbors of that node, with the cost of the link to each one
- Additional information such as sequence number and time to live

We will ignore the sequence number and time to live information and just focus on the ID and list of neighbors. Assume that each node generates its own LSP as shown below and that each node has an up-to-date copy of all LSP's

Source A	
Nbr	Cost
B	2
C	1
D	6

Source B	
Nbr	Cost
A	2
E	1
I	3

Source C	
Nbr	Cost
A	6
E	3
F	7

Source D	
Nbr	Cost
A	10
F	1
J	5

Source E	
Nbr	Cost
B	1
C	3
G	4

Source F	
Nbr	Cost
C	12
D	6
H	4

Source G	
Nbr	Cost
E	1
H	5
I	6

Source H	
Nbr	Cost
F	14
G	13
J	6

Source I	
Nbr	Cost
B	3
G	1
J	4

Source J	
Nbr	Cost
D	6
H	1
I	4

3.1 Draw a diagram of the network that is consistent with these tables, showing the cost of all links.

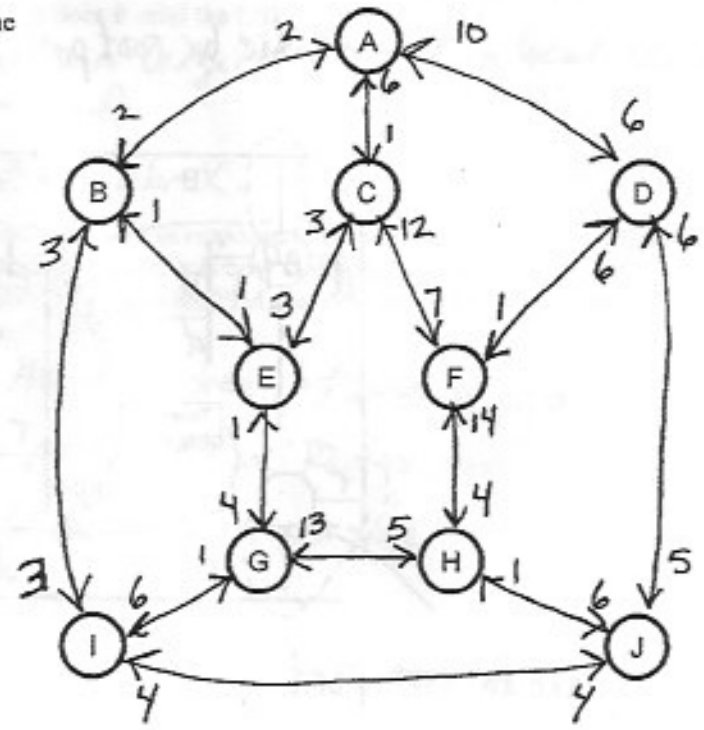

3.2 For a packet that is generated at node A with node H as its destination, give the path that the packet follows. Find min cost route at A using Dijkstra's alg.

Here is the order routes are added to confirmed set

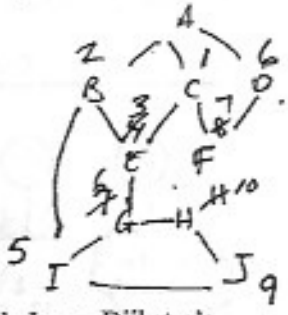

Dest:	C	B	E	I	G	D	F	J	H
Cost:	1	2	3	5	6	6	7	9	10

path $A \to B \to I \to J \to H$

3.3 Assume that node I updates the cost of its link to J with a new value of 6. Node I runs Dijkstra's algorithm and updates its forwarding table, but it does not notify any of the other nodes in the network of the change (say for example, due to an error). Does this change the path that a packet from A to H follows? If so, give the new path. $I \to J$ increases 4 to 6

run Dijkstra's at I (looking for route to H)

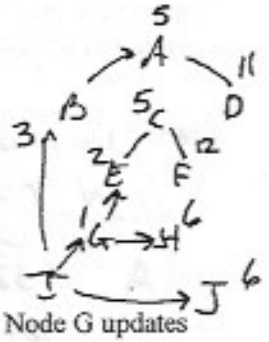

Dest:	G	E	B	A	C	H	J	D	F
Cost:	1	2	3	5	5	6	6	11	12

notice I calculates route as $I \to G \to H$ w/cost 6

path $A \to B \to I \to G \to H$

3.4 Next, assume that node G updates the cost of its link to H with a new value of 14. Node G updates its forwarding table and forwards its LSP packet to all nodes except, because of another error, the LSP packet does not reach node I. In addition, the change that node I made in part 3.3 still has not reached any of the other nodes in the network. Does this change the path that a packet from A to H follows? If so, give the new path. $G \to H$ increases 5 to 14

Notice A (and B) do not change <u>any</u> of their routes because of the new cost of the link $G \to H$.
(because A & B do not know the new cost of the $I \to J$ link)

I gets no LSP's so I does not change its route to H (next hop is G)

However, now G calculates new routes.

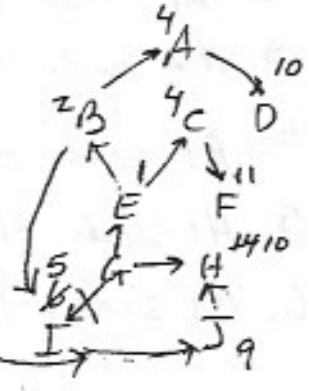

at G:

dest:	E	B	A	C	I	J	D	H	F
cost:	1	2	4	4	5	9	10	10	11

to reach H, G uses E as next hop
(and E uses B as next hop)

G still has $I \to J$ as 4

path $A \to B \to I \to G \to E \to$ loop

4 IP Forwarding, LAN Forwarding, ARP, and Subnet Masks.

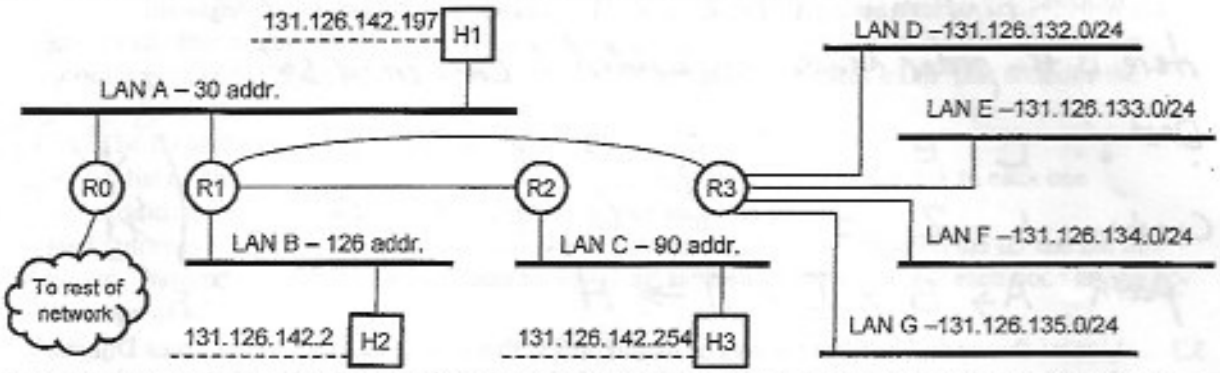

Suppose an organization has been assigned one Class B address with network number 131.126.0.0. The organization must utilize the block of addresses from 131.126.142.0 to 131.126.142.255 for LAN's A, B, and C. The addresses must be organized so that 30 IP addresses are available for LAN A, 126 IP addresses for LAN B, and 90 IP addresses for LAN C. Furthermore, the three hosts, H1, H2, and H3 must have the IP addresses shown in the figure. (Notice LAN's D, E, F, and G have a subnet mask indicated by /24, which is equivalent to 255.255.255.0)

8 host bits
=256

4.1 List subnet numbers and mask assignments for LAN's A, B, and C.

LAN	range host ID's	subnet	mask
A	32: 192-223	131.126.142.192	255.255.255.224
B	128: 0-127	131.126.142.0	255.255.255.128
C	64: 128-191	131.126.142.128	255.255.255.192
	32: 224-255	131.126.142.224	255.255.255.224

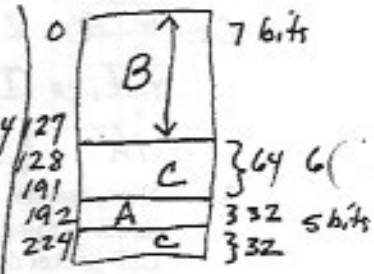

4.2 Suppose that H2 is configured with only a default route to R1 in its IP forwarding table. Assume that IP address and subnet masks are correctly assigned for all hosts and routers. Give the sequence of *all* Ethernet frames that are transmitted on the LAN's when H2 has a packet to forward for H1. For each Ethernet frame, specify its destination address and the type of packet the frame contains. (Assume that network has been idle long enough so that all ARP caches have timed out Also, assume H2 knows H1's IP address.)

H2 determines H1 is not on its subnet, so sends to R1

Eth. frames.

1. H2 sends broadcast ARP query on LAN B to get R1's MAC.
2. R1 sends H2 unicast ARP reply with R1's MAC.
3. H2 sends IP packet (for H1) to R1
4. R1 sends broadcast ARP query on LAN A to get H1's MAC
5. H1 sends R1 unicast ARP reply with H1's MAC
6. R1 sends IP packet to H1

4.3 Simplify the IP forwarding table for router R1, assuming the routing protocol and IP forwarding algorithm both use CIDR. You must use the rules for CIDR to minimize the number of entries in R1's forwarding table.

Two steps to minimize number of entries.

1. combine LAN's D, E, F, G.

132 = 128 + 4 = 1000 0100
133 = 128 + 4 + 1 = 1000 0101
134 = 128 + 6 = 1000 0110
135 = 128 + 7 = 1000 0111

make mask 22 bits

2. use longest match rule so R2/LAN C not listed twice

subnet / mask bits	next
131.126.142.192/27	LAN A
131.126.142.0/25	LAN B
131.126.142.128/25	R2
131.126.132.0/22	R3
default	R0

Name: Solutions

ECE 4380/6380: Computer Communications **Spring 2017**

Exam 2 (Each of the 4 problems is worth 25 points) **Friday, April 7**

Graduate students (638): For problem 1, you only need to answer any 8 of the short answer questions.

Undergraduate students (438): For problem 1, you only need to answer any 6 of the short answer questions. Extra credit earned on any extra answers will be added to your total homework score.

1 Short Answer. Your answer to each question should be twenty words or less.

1.1 How are forwarding tables built for learning bridges?

Each bridge monitors the source address for all frames it receives. The port the frame is received on is added to the table for this address

1.2 Assume router R8 receives a broadcast ARP query that is requesting host H25's MAC address. The other fields in R8's ARP table include H25's IP address and the IP and MAC addresses for the source of the ARP packet, which is host H19. If R8 finds that H25's IP address **is** in its ARP table but H19's IP address **is not** in its ARP table, how does R8 update its ARP table and what ARP reply packet does R8 send?

R8 ignores the ARP query and makes no reply.
H19 is unknown so not added to table
H25 is not the source of the query, so do not update the timer
(H25 is responsible for responding to the query)

1.3 Describe the actions performed by IP routers to catch packets that are going around in loops.

A router decrements the TTL (hop count) field in an IP packet. If the hop count is zero, the packet is discarded
An ICMP message can be sent to the source

1.4 A network that employs virtual-circuit forwarding must have a protocol to setup the virtual circuit before it can be utilized. One of the tasks during the setup phase is to assign the local virtual-circuit identifier (VCI) at each switch. Once the virtual circuit is setup, the packets are forwarded based on the VCI. How is the setup packet forwarded given that the local VCI's have not yet been established?

Setup packets are routed like datagrams using destination-based routing

1.5 An organization has a large number of LAN's and one DHCP server. How does a newly booted host contact the DHCP server when the server is not located on the host's LAN?

The host broadcasts a DHCP discovery message on the LAN. A DHCP relay sends a unicast message to the DHCP server

1.6 A host attached to an Ethernet LAN is configured with a single default route in its forwarding table. Assume two routers are connected to this LAN, R1 and R2, and that R1 is the default router for the host. If a destination host is reachable through R2, the first time a packet from the host is forwarded it travels to R1, and R1 forwards the packet to R2 (the packet travels on the LAN twice). What mechanism is available with IP to update the host to forward packets for this destination directly to R2?

ICMP redirect message to have the host install a host-specific entry in its forwarding table

1.7 Name an advantage of a level-3 switch compared to a level-2 switch.

Support for different types of LANs.
(lots of other reasons: improved routing, scalability, reduced collision domains, etc...)

1.8 The traceroute function allows a network engineer to discover the IP addresses for the routers in the path to some destination. What features of IP and ICMP make this capability easy to implement? Set the TTL field in an IP packet to 1. At first router, it is dropped and an ICMP error message is returned to source. Repeat for successively larger hop counts

1.9 A host that receives an IP packet that has been fragmented must wait until it collects all of the fragments associated with this packet. What actions does that host take if, after a suitably long period of time, there are still one or more fragments missing?

The host discards the fragments. It can send an ICMP reassembly failure message, but IP does not handle retransmissions

1.10 The following four IP packets have been received at a destination node. The packets are part of the same original IP packet, but the original packet was fragmented. Have all of the fragments been received? Justify your answer by describing how the fragments are reassembled or describing what portion (or portions) of the packet is missing.

Packet no.	Source IP address	Fragment ID	M bit	Offset	Bytes of data
1	192.21.129.1	45	0	192	256
2	192.21.129.1	45	1	0	512
3	192.21.129.1	45	1	128	512
4	192.21.129.1	45	1	64	256

Offset	pkt#	Size	words
0	2	512	64
64	4	256	32
96	—		32
128	3	512	64
192	1	256	—

No, missing fragment starting at offset 96. Containing 256 bytes (or 32 words)

2 Spanning Tree Algorithm for Intelligent Bridges.

Consider the spanning tree algorithm for the network shown to the right. The seven bridges numbered 1 to 7 run the spanning tree algorithm. Router R0 is connected to LAN ~~A~~ G and provides a connection to the Internet.

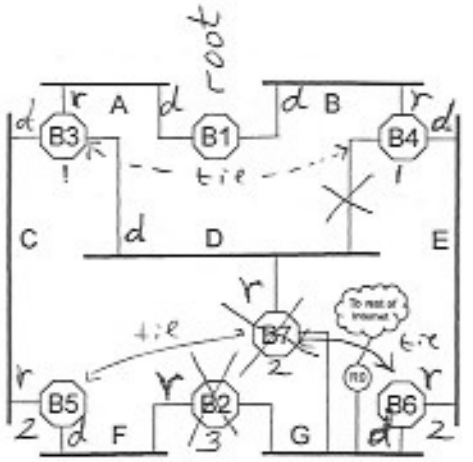

2.1 Indicate on the figure the spanning tree. Be sure to indicate the root port for each bridge (except the root bridge), the designated port for each LAN, and the links and bridges that do not participate in forwarding data frames.

2.2 Assume that hosts attached to LAN C generate traffic with destinations found through the router to the rest of the network, and the bridges have learned which port to use for forwarding traffic between LAN C and RO. Which bridges forward frames generated by hosts on LAN C to RO?

LAN C → B3 → LAN A → B1 → LAN B → B4 → LAN E → B6 → LAN G

2.3 Assume that hosts attached to LAN's A, B, and C generate traffic with destinations found through the router to the rest of the network. Renumber the bridges so that the traffic from the hosts on LAN A traverses LAN D to LAN G, LAN B traverses LAN E to G, and LAN C traverses LAN F to G. Draw the resulting spanning tree in the figure below showing the new bridge numbers and root and designated ports. You can only change the numbers assigned to the bridges (e.g., links cannot be moved and no new links can be added).

tie but does not matter how broken

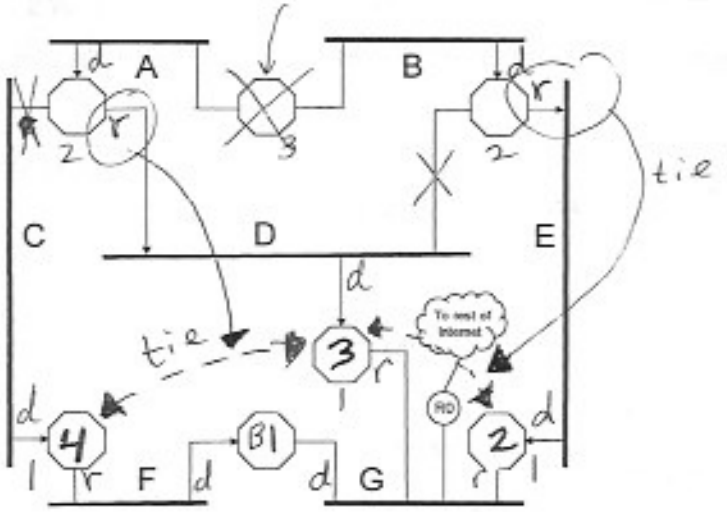

3 IP forwarding, LAN forwarding, ARP, and subnet masks.

An organization with five Ethernet LAN's utilizes a Class B address with network number 128.96. Using subnet masks, the organization has created four subnets pictured in the figure. Routers R1, R2, and R3 connect the subnets. Notice that the learning bridge B1 connects LANs D and E into an extended LAN. The organization assigned subnet numbers and masks shown in the figure. For example, the IP address for host H1 on LAN A is 128.96.34.2 and its mask is 255.255.255.128.

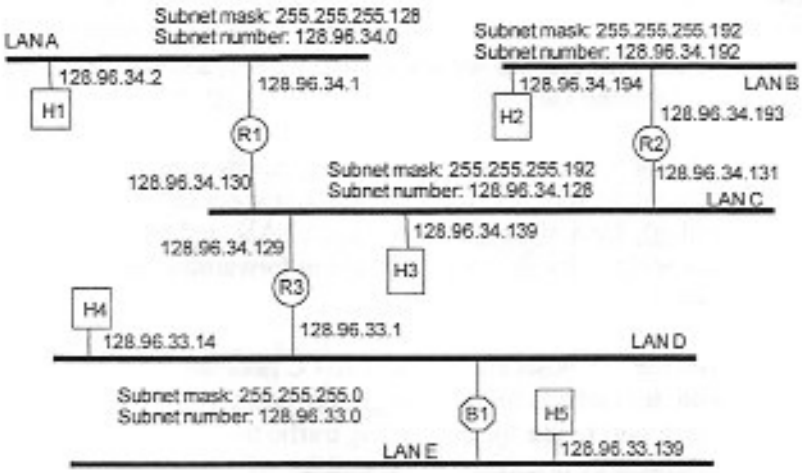

Part A. For part A only, assume a network manager has configured the mask for host H3 incorrectly. The IP address 128.96.34.139 is correct, but the manager set the subnet mask to 255.255.255.0 instead of 255.255.255.192. The default router for host H3 is 128.96.34.130 (R1).

For each of the following four questions determine if H3 can send an IP packet to the given destination. If it can, describe the Ethernet frames that each host transmits. If not, describe the problem. The incorrect subnet mask causes problems. Be sure to explain what the problem is.

3.1 Can H3 send an IP packet to H1? No } H3 broadcasts ARP query on LAN C but gets no reply

3.2 Can H3 send an IP packet to H2? No

3.3 Can H3 send an IP packet to H4? Yes } H3 forwards to R1 (its default router).

3.4 Can H3 send an IP packet to H5? Yes

H3: 128.96.34.139
mask : 255.255.255.0
subnet 128.96.34.0

⇒ H3 decides an IP address with subnet number 128.96.34.0 to ..34.255 is on its local network.
⇒ H3 belives H1 and H2 are on its LAN but H4 and H5 are on a different LAN (due to subnet 33.0)

For H4 and H5, H3 broadcasts ARP query for R1's MAC on LAN C. R1 replies with its MAC address. H3 forwards IP packet to R1. R1 repeats 3 steps to forward to R3. R3 repeat 3 steps to forward to hosts. (if MAC add new found in cache, can skip ARP query/reply steps)

Part B. For this part, assume the network manager corrects the subnet mask for H3. However, after this change the manager thinks that host H5 should also use a subnet mask of 255.255.255.192. For the following questions, repeat the analysis from part A but for H5.

3.5 Can H5 send an IP packet to H1? Yes

3.6 Can H5 send an IP packet to H2? Yes

3.7 Can H5 send an IP packet to H3? Yes

3.8 Can H5 send an IP packet to H4? Yes

H5: 128.96.33.139
mask 255.255.255.192
128.96.33.128

Since none of H1, H2, H3, or H4 has an IP address in the 33.128 range (from 33.128 to 33.191) H5 believes all hosts are not in its local LAN

H5 forwards these IP packets to its default router (R3). using the normal method (ARP query/reply if MAC not in cache, followed by sending IP to R3).
Note R3 can forward the packet to H4.

R3 can send an ICMP redirect message to H5 for H4. (as could be done in previous part of this problem for H3 to H4 and H5).

4 Subnet Design and CIDR.

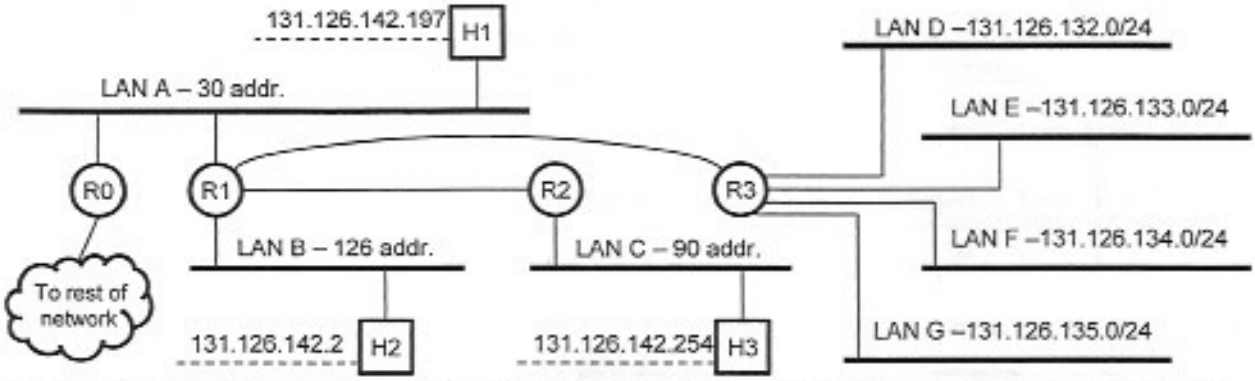

Suppose an organization has been assigned one Class B address with network number 131.126.0.0. The organization must utilize the block of addresses from 131.126.142.0 to 131.126.142.255 for LAN's A, B, and C. The addresses must be organized so that 30 IP addresses are available for LAN A, 126 IP addresses for LAN B, and 90 IP addresses for LAN C. Furthermore, the three hosts, H1, H2, and H3 must have the IP addresses shown in the figure. (Notice LAN's D, E, F, and G have a subnet mask indicated by /24, which is equivalent to 255.255.255.0)

142 subnet

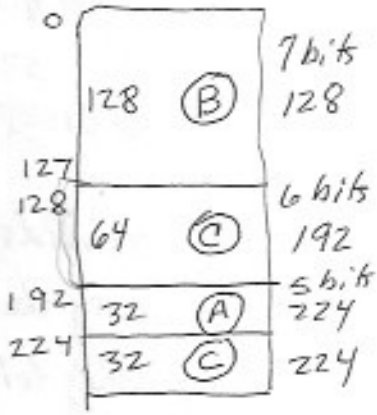

4.1 List subnet numbers and mask assignments for LAN's A, B, and C.

LAN A ⇒ block size 32 in range 192 to 223
LAN B ⇒ 128 0 to 127
LAN C ⇒ two blocks of 64 and 32
64 in range 128 to 191
32 in range 224 to 255

LAN A 131.126.142.192
255.255.255.224

LAN B 131.126.142.0
255.255.255.128

LAN C 131.126.142.128
255.255.255.192

131.126.142.224
255.255.255.224

1000 0000

1000 0000
1110 0000

4.2 Simplify the IP forwarding table for router R1, assuming the routing protocol and IP forwarding algorithm both use CIDR. You must use the rules for CIDR to minimize the number of entries in R1's forwarding table.

1) aggregate addresses for LANs D, E, F, and G

132 = 128 + 4	1000 01	00
133 = 128 + 5	1000 01	01
134 = 128 + 6	1000 01	10
135 = 128 + 7	1000 01	11

common 6 bits → implies mask is /22

2) use longest match rule so only one entry for LAN A and C (R2)

R1's forwarding table

subnet / mask	next hop
131.128.132.0/22	R3
131.126.142.0/25	LAN B
131.126.142.128/25	R2
131.126.142.192/27	LAN A
default	R0

(longest match) rule

30

Name: Cavaine Hester

ECE 4380/6380: Computer Communications **Spring 2017**

Exam 2 (Each of the 4 problems is worth 25 points) **Friday, April 7**

Graduate students (638): For problem 1, you only need to answer any 8 of the short answer questions.

Undergraduate students (438): For problem 1, you only need to answer any 6 of the short answer questions. Extra credit earned on any extra answers will be added to your total homework score.

25
25
15
23
88

1 Short Answer. Your answer to each question should be twenty words or less.

25

1.1 How are forwarding tables built for learning bridges?

the sender and root and number of hops are stored when packages are sent, when replies are sent, the sender ID and number of hops it took to get the package are stored for later package forwarding. this is spanning tree protocol, not learning bridge

X

1.2 Assume router R8 receives a broadcast ARP query that is requesting host H25's MAC address. The other fields in R8's ARP table include H25's IP address and the IP and MAC addresses for the source of the ARP packet, which is host H19. If R8 finds that H25's IP address **is** in its ARP table but H19's IP address **is not** in its ARP table, how does R8 update its ARP table and what ARP reply packet does R8 send?

H25 → R8 ← H19

R8 update its ARP table with the IP address of H19 as it can receive packets from H19 (when going to H25) and replies with a ARP unicast with H25's MAC address.

X

1.3 Describe the actions performed by IP routers to catch packets that are going around in loops.

if an IP router sees itself in the route to the destination, then it knows that is the wrong loop and will chose a better one and avoid causing the packet to go in a loop

X

1.4 A network that employs virtual-circuit forwarding must have a protocol to setup the virtual circuit before it can be utilized. One of the tasks during the setup phase is to assign the local virtual-circuit identifier (VCI) at each switch. Once the virtual circuit is setup, the packets are forwarded based on the VCI. How is the setup packet forwarded given that the local VCI's have not yet been established?

sent as datagrams on direction-based networks

✓

1.5 An organization has a large number of LAN's and one DHCP server. How does a newly booted host contact the DHCP server when the server is not located on the host's LAN?

DHCPDISCOVER signal is sent as a broad cast to (255.255.255.255). either the DHCP sever sees it and replies or it is seen by a reply agent and the reply agent sends it on to the DHCP sever for a reply

✓

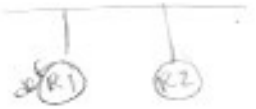

1.6 A host attached to an Ethernet LAN is configured with a single default route in its forwarding table. Assume two routers are connected to this LAN, R1 and R2, and that R1 is the default router for the host. If a destination host is reachable through R2, the first time a packet from the host is forwarded it travels to R1, and R1 forwards the packet to R2 (the packet travels on the LAN twice). What mechanism is available with IP to update the host to forward packets for this destination directly to R2?

redirect icmp when R1 realizes it has to send the packet back through the LAN to get to R2 towards the destination, it can update the forwarding table

1.7 Name an advantage of a level-3 switch compared to a level-2 switch.

a level 3 switch can compare more and has a better level of security/accuracy over a level 2-switch

1.8 The traceroute function allows a network engineer to discover the IP addresses for the routers in the path to some destination. What features of IP and ICMP make this capability easy to implement?

X header information when sending packets, sending bridge ID, root bridge ID and number of hops

1.9 A host that receives an IP packet that has been fragmented must wait until it collects all of the fragments associated with this packet. What actions does that host take if, after a suitably long period of time, there are still one or more fragments missing?

after a long period of time when one (or more) fragment(s) are missing, the host stops trying to reassemble and discards the fragments it has received.

1.10 The following four IP packets have been received at a destination node. The packets are part of the same original IP packet, but the original packet was fragmented. Have all of the fragments been received? Justify your answer by describing how the fragments are reassembled or describing what portion (or portions) of the packet is missing.

Packet no.	Source IP address	Fragment ID	M bit	Offset	Bytes of data
1	192.21.129.1	45	0	192	256
2	192.21.129.1	45	1	0	512
3	192.21.129.1	45	1	128	512
4	192.21.129.1	45	1	64	256

offset	bytes	words
0	512	64
64	256	32
96	—	— (32)
128	512	64
192	256	32
		end

there is a fragment missing at offset 96 with a size 256 bytes (32 words)

25

2 Spanning Tree Algorithm for Intelligent Bridges.

Consider the spanning tree algorithm for the network shown to the right. The seven bridges numbered 1 to 7 run the spanning tree algorithm. Router R0 is connected to LAN ~~5~~ 6 and provides a connection to the Internet.

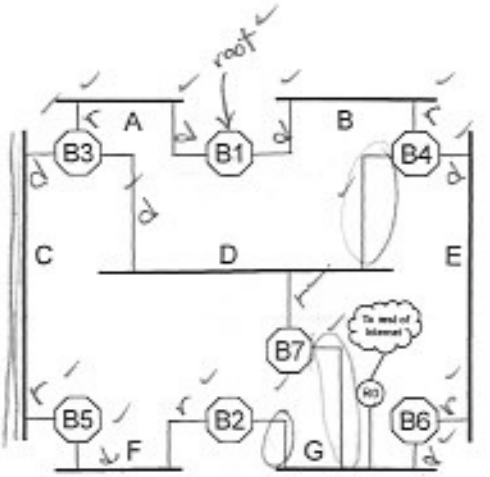

2.1 Indicate on the figure the spanning tree. Be sure to indicate the root port for each bridge (except the root bridge), the designated port for each LAN, and the links and bridges that do not participate in forwarding data frames.

B4:D, B2, B7 do not forward data

2.2 Assume that hosts attached to LAN C generate traffic with destinations found through the router to the rest of the network, and the bridges have learned which port to use for forwarding traffic between LAN C and RO. Which bridges forward frames generated by hosts on LAN C to RO?

B3 → B1 → B4 → B6

2.3 Assume that hosts attached to LAN's A, B, and C generate traffic with destinations found through the router to the rest of the network. Renumber the bridges so that the traffic from the hosts on LAN A traverses LAN D to LAN G, LAN B traverses LAN E to G, and LAN C traverses LAN F to G. Draw the resulting spanning tree in the figure below showing the new bridge numbers and root and designated ports. You can only change the numbers assigned to the bridges (e.g., links cannot be moved and no new links can be added).

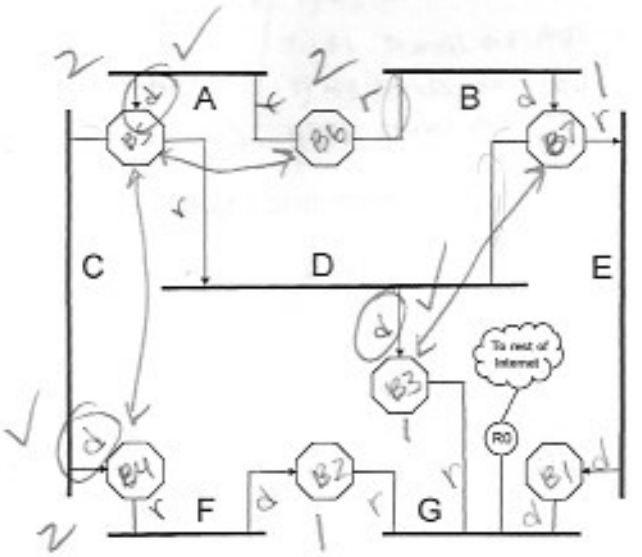

15

3 IP forwarding, LAN forwarding, ARP, and subnet masks.

An organization with five Ethernet LAN's utilizes a Class B address with network number 128.96. Using subnet masks, the organization has created four subnets pictured in the figure. Routers R1, R2, and R3 connect the subnets. Notice that the learning bridge B1 connects LANs D and E into an extended LAN. The organization assigned subnet numbers and masks shown in the figure. For example, the IP address for host H1 on LAN A is 128.96.34.2 and its mask is 255.255.255.128.

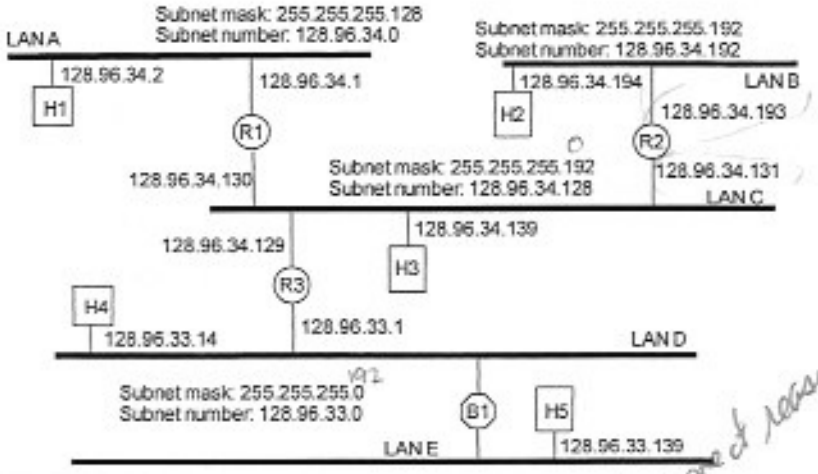

this is how it works if H3's subnet mask is correct.

not correct reason.

Part A. For part A only, assume a network manager has configured the mask for host H3 incorrectly. The IP address 128.96.34.139 is correct, but the manager set the subnet mask to 255.255.255.0 instead of 255.255.255.192. The default router for host H3 is 128.96.34.130 (R1).

matches subnet number for LAN A

For each of the following four questions determine if H3 can send an IP packet to the given destination. If it can, describe the Ethernet frames that each host transmits. If not, describe the problem. The incorrect subnet mask causes problems. Be sure to explain what the problem is.

128.96.34.139 && 255.255.255.0 = 128.96.34.0 does not match with any routers, goes to defaut (R1) then to H4

X 3.1 Can H3 send an IP packet to H1? yes

✓ 3.2 Can H3 send an IP packet to H2?

X 3.3 Can H3 send an IP packet to H4? no

X 3.4 Can H3 send an IP packet to H5? no

to Ethernet frames:
1) H3 sends an ARP query for R1's MAC address
2) R1 sends an ARP unicast with its MAC address
3) H3 sends an IP packet to the received R1 MAC address
4) R1 sends an ARP query for H1's MAC address
5) H1 sends an ARP unicast with its MAC address
6) R1 sends the IP packet to the received MAC address.

128.96.34.139 = 1000 0000 | 0110 0000 | 0010 0010 | 1000 1011

255.255.255.0 = 1111 1111 | 1111 1111 | 1111 1111 | 0000 0000

128.96.34.0 = 1000 0000 | 0110 0000 | 0010 0010 | 0000 0000

H3 can not send an IP packet to H2, H4, or H5 because when H3's IP address is ANDed with the subnet mask it does not match the IP address expected for R3, which would be the next hop to get to H2, H4, or H5.

don't understand this. this would not work even if mask was correct.

Part B. For this part, assume the network manager corrects the subnet mask for H3. However, after this change the manager thinks that host H5 should also use a subnet mask of 255.255.255.192. For the following questions, repeat the analysis from part A but for H5.

3.5 Can H5 send an IP packet to H1?
no

3.6 Can H5 send an IP packet to H2?
no

3.7 Can H5 send an IP packet to H3?
no

3.8 Can H5 send an IP packet to H4?
no

128.96.33.139 && 255.255.255.192 = 128.96.33.128
the resulting IP address does not match any subnet numbers, so with the incorrect mask, H5 can not successfully send any packets to H1, H2, H3, or H4.

this is true. So, H5 sends packet to its default router -- in all cases here, including H4!

128.96.33.139 =	1000 0000	0110 0000	0010 0001	1000 1011
255.255.255.192 =	1111 1111	1111 1111	1111 1111	1100 0000
128.96.33.128 =	1000 0000	0110 0000	00100001	1000 0000

23

142 10001

132 : 10000100
133 : 10000101
134 : 10000110
135 : 10000111

6 bits

Correct

4 Subnet Design and CIDR.

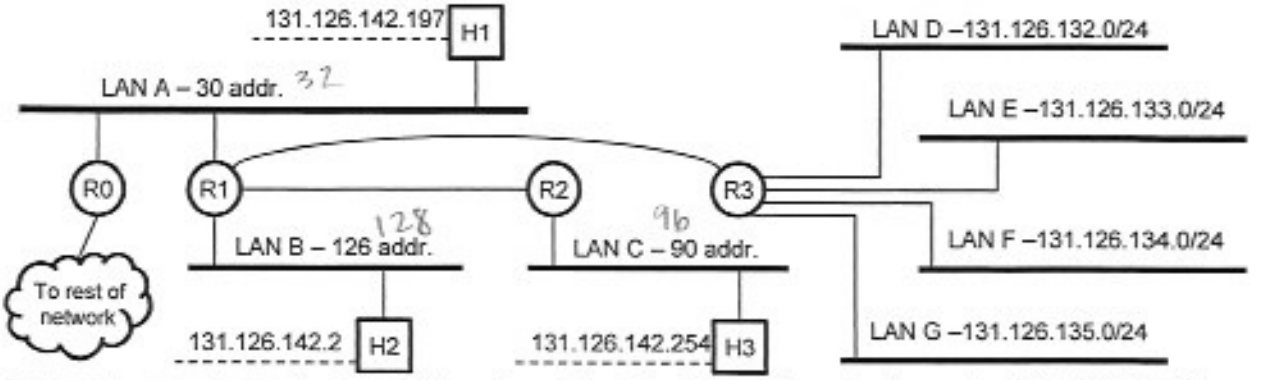

Suppose an organization has been assigned one Class B address with network number 131.126.0.0. The organization must utilize the block of addresses from 131.126.142.0 to 131.126.142.255 for LAN's A, B, and C. The addresses must be organized so that 30 IP addresses are available for LAN A, 126 IP addresses for LAN B, and 90 IP addresses for LAN C. Furthermore, the three hosts, H1, H2, and H3 must have the IP addresses shown in the figure. (Notice LAN's D, E, F, and G have a subnet mask indicated by /24, which is equivalent to 255.255.255.0)

4.1 List subnet numbers and mask assignments for LAN's A, B, and C.

depends on # of addresses

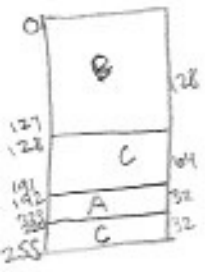

LAN	Subnet numbers	mask	addr range	addr size
A	131.126.142.192	255.255.255.224	192 - 223	32
B	131.126.142.0	255.255.255.128	0 - 127	128
C	131.126.142.128	255.255.255.192	128 - 191	64
C	131.126.142.224	255.255.255.224	224 - 255	32

A 192 1100 0000 27
B 0 0000 0000 25
C [128: 1000 0000
224 1110 0000 25

4.2 Simplify the IP forwarding table for router R1, assuming the routing protocol and IP forwarding algorithm both use CIDR. You must use the rules for CIDR to minimize the number of entries in R1's forwarding table.

Subnet number/mask	next hop
131.126.142.192/27	LAN A
131.126.142.0/25	LAN B
131.126.142.128/25	R2
131.126.132.0/29	R3
Default	R0

should be 22 = 16 + 6

-2

Name:_____

ECE 438/638: Computer Communications **Spring 2015**

Exam 2 (Each of the 4 problems is worth 25 points) **Monday, April 6**

Graduate students (638): For problem 1, you only need to answer any 8 of the short answer questions.

Undergraduate students (438): For problem 1, you only need to answer any 5 of the short answer questions. Extra credit earned on any extra answers will be added to your total homework score.

1 Short Answer. Your answer to each question should be twenty words or less.

1.1 Learning bridges and the spanning tree algorithm allow for packets to be forwarded from a source LAN to a destination LAN without the possibility of the packet traveling in a loop. What is a disadvantage to this approach to building forwarding tables compared to more complex protocols such as RIP or OSPF?

RIP: routing information protocol

1.2 In RIP and OSPF, if a message with updated routing information is lost this can cause significant problems. How does BGP ensure that any routing information sent from one speaker to another does not have to be sent again?

1.3 Describe the actions performed by IP routers to catch packets that are going around in loops.

1.4 The design of IPv6 provided the opportunity to add new features to the Internet Protocol (IP). However, nearly all the features have since been retrofitted to IPv4. So, what is the main reason for updating to IPv6?

CH4

1.5 Consider the case in which DHCP is used to dynamically assign IP addresses to hosts from an address pool. Describe how DHCP can determine that it should recover an IP address from a host that is suddenly disconnected from the network

the addresses are leased for some period of time. once the lease expires, the server is to return that address to its pool.

- a host with a leased address needs to renew the lease periodically if it is still connected + functioning properly

1.6 Mobile IP is designed to work without any changes to non-mobile hosts and the majority of routers. Describe how a packet for a mobile host is forwarded from the home agent to the foreign agent given that none of the routers between these agents have been changed.

CH4

The foreign agent sends care-of-address to home agent. The home agent tunnels the packets to the foreign agent.

1.7 What does a host do when it receives an ARP packet from an unknown host to a second unknown host?

it ignores the ARP packet (to avoid cluttering its ARP table)

CH4 1.8 Multiprotocol label switching (MPLS) combines some of the properties of virtual circuits with the flexibility and robustness of datagrams. Name the two main applications of MPLS that have led to its widespread deployment.

CH4? 1.9 Protocol-independent multicast (PIM) was developed in response to the scaling problems of earlier protocols. PIM is very much bound up with the Internet protocol (IP). It what way is PIM protocol independent?

1.10 Give two arguments against IP reassembly in routers.

- it will still be attempted even if a single fragment is lost
- not simple, increase complexity
- fragments can take different routes to get from source to destination
- having routers wait to send reassembled message would slow shutting down

2 Spanning Tree Algorithm for Intelligent Bridges.

Suppose the spanning tree algorithm is used for the network shown to the right. The eight bridges numbered 1 to 8 run the spanning tree algorithm. Router R0 is connected to LAN A and provides a connection to the Internet.

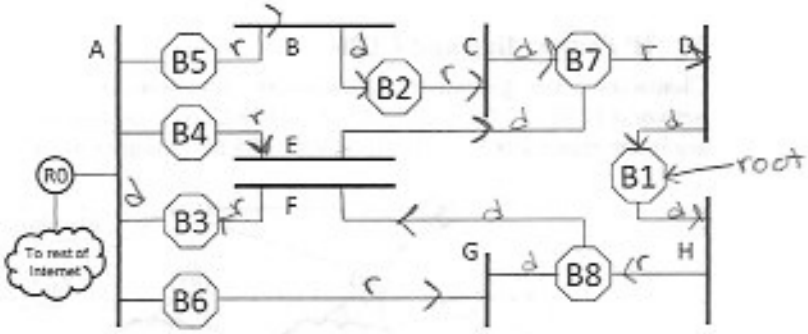

2.1 Indicate on the figure the spanning tree. Be sure to indicate the root port for each bridge (except the root bridge), the designated port for each LAN, and the links and bridges that do not participate in forwarding data frames.

B4, B5, B6 do not forward data frames

2.2 Assume that hosts attached to LAN B generate traffic with destinations found through the router to the rest of the network, and the bridges have learned which port to use for forwarding traffic between LAN B and RO. Which bridges forward frames generated by hosts on LAN B to RO?

B2 → B7 → B1 → B8 → B3

2.3 Assume that hosts attached to LAN's C, D, G, and H generate traffic with destinations found through the router to the rest of the network. Renumber the bridges so that the traffic from the hosts on LAN C traverses LAN B to LAN A, LAN D traverses LAN E to A, LAN H traverses LAN F to A and LAN G forward directly to LAN A. Draw the resulting spanning tree in the figure below including the new bridge numbers and root and designated ports. You can only change the numbers assigned to the bridges (e.g., links cannot be moved and no new links can be added).

renumber B3 or B4 as B1

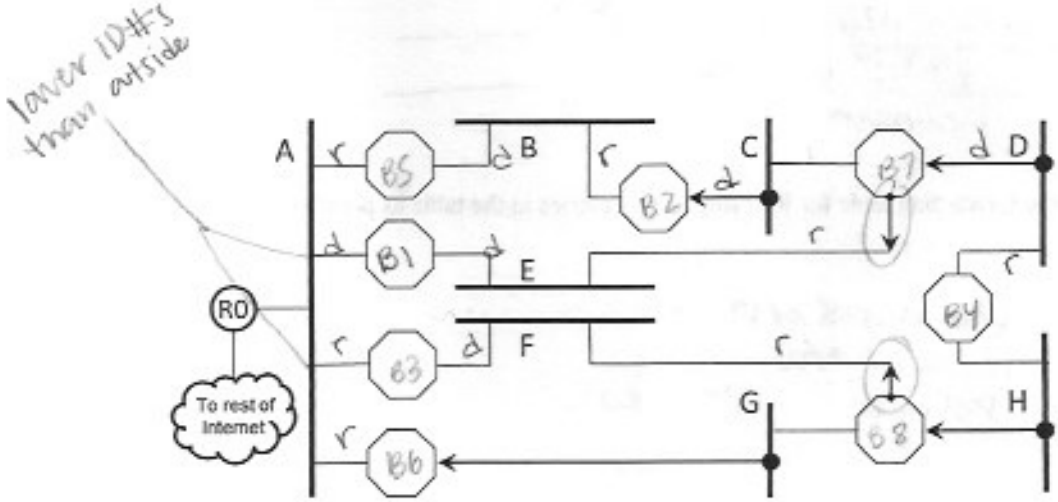

3 IP Forwarding and CIDR.

Clemson has two globally unique address allocations: one Class B address that is used for all wired networks (130.127.0.0), and a block of 128 Class C addresses used for all 802.11 networks (the addresses are in the range 198.21.128.0 to 198.21.255.0). Assume the network is organized as shown in the figure.

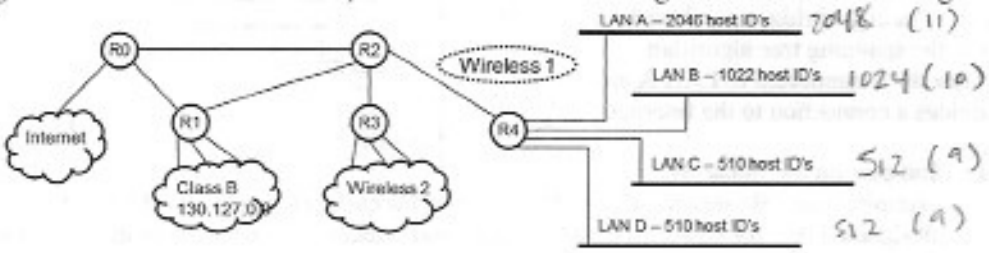

144: 1001 1000 00000000
159: 1001 1111 00000000
152: 1001 1100
156: 1001 1100
1001 1110

3.1 Assume the wireless networks are divided into two domains. You are to configure the domain "wireless 1" and R4 to use 16 of the class C addresses in the range 198.21.144.0 to 198.21.159.0. The remaining 112 of the class C addresses are assigned to the "wireless 2" domain. Each of the 4 LAN's in the wireless-1 domain are to be assigned a block of addresses for use by 802.11 access points connected to each LAN. The addresses are to be divided to support the number of address allocations as shown in the figure. In the table below, specify the forwarding table for router R4, using CIDR and just one entry for each LAN, plus a default entry.

Network number / Mask length	Interface / next hop
198.21.144.0/21	LAN A
198.21.152.0/22	LAN B
198.21.156.0/23	LAN C
198.21.158.0/23	LAN D
default	R2

3.2 Give the forwarding table for R2 using as few entries in the table as possible. You must use super-networks, the CIDR longest-match forwarding rule, and a default entry to minimize the size of the table.

198.21.144.0/20	R4
198.21.128.0/17	R3
130.127.0.0/16	R1
Default	R0

3.3 Give the forwarding table for R0 using as few entries in the table as possible.

198.21.128.0/17	R2
130.127.0.0/16	R1
Default	R0

CH3

4 Distance-vector routing.

Consider a network that has nodes designated as A, B, C, D, E, F, and G. There is a positive integer cost assigned to each link in the network, and do not assume that the cost is the same in each direction on a link. For example, you can easily see in the tables below that the cost of the link from B to F is 3 but the cost of the link from F to B is 1. You are able to observe the current state of the forwarding tables at three of the nodes: nodes A, B, and F. Assume that the routing protocol has built the forwarding tables so that the minimum cost route is selected for each destination, where the cost of a route is simply the sum of the costs of the links in the route. The forwarding tables for these nodes are shown below.

A's table			B's table			F's table		
Destination	Next Node	Cost	Destination	Next Node	Cost	Destination	Next Node	Cost
A	-	-	A	D	5	A	A	2
B	F	2	B	-	-	B	B	1
C	F	6	C	E	7	C	C	5
D	F	6	D	D	4	D	B	5
E	F	5	E	E	3	E	B	4
F	F	1	F	F	3	F	-	-
G	F	6	G	E	4	G	B	5

4.1 Draw the network connectivity and give the costs for the links that can be positively verified to have a specific value based upon the entries in the forwarding tables. Note, it is possible that the cost cannot be determined for some links.

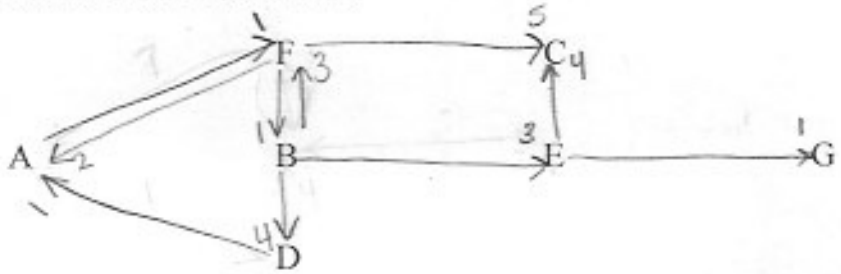

4.2 Costs for one or more links change in the network and B's forwarding table is updated to the following entries. Nodes A and F have not yet been notified of any of the changes, and their tables have not yet been updated. What links have new values?

B's table		
Destination	Next Node	Cost
A	A	1
B	-	-
C	A	7
D	D	4
E	E	3
F	F	3
G	A	9

B→A=1

E→G≠1 & E→G≥6

4.3 After the change to B's forwarding table, there is a problem with the forwarding information. Describe the problem.

loop in path B → G

BC

B → A → F → B → ...

4.4 For this part of the problem, assume the nodes are asynchronously executing a distributed version of the Bellman-Ford algorithm and using split horizon with poison reverse. Nodes A and F have the routing table given at the start of the problem and node B has the routing table given in part 4.2. Assume that node B is the next node to send distance vectors to its neighbors. Give the distance vectors that B sends to neighbors A and F. After A and F update their routing tables, is the problem you found in part 4.3 fixed (briefly explain your answer)?

Partial Solutions. You must show your work.

2.1. Show that bridges 4, 5, and 6 do not forward data packets. B3 is the designated port for LAN A. Note the root port for B5 has a tie (and select LAN B).
2.2. B2 -> B7 -> B1 -> B8 -> B3
2.3. Many solutions are possible. One approach is to renumber B3 as B1. Be careful with ties for LANs C, D, and G.

3.1.	198.21.144.0/21	
	198.21.152.0/22	
	198.21.156.0/23	
	198.21.158.0/23	
3.2	198.21.144.0/20	R4
	198.21.128.0/17	R3
	130.127.0.0/16	R1
	Default	R0
3.2	198.21.128.0/17	R2
	130.127.0.0/16	R1
	Default	internet

4.1. Notice the costs are not the same in each direction on a link. Links:
A link to F
B links to D, E, and F
F links to A, B, and C
Deduce E to G is 1
Deduce D to A is 1
Path from B to C is not known (there could be many possibilities)
4.2. B to A is now 1. E to G is no longer 1 and at least 6 if not higher. Could be other changes but cannot determine with certainty.
4.3. To reach G, B forwards to A. But A forwards to F and F forwards to B. Thus, there is a loop.
4.4. For the distance vector from B to A, B sets the cost to infinity for entries with A as the next hop (A, C, and G). For the distance vector from B to F the cost is infinity for F. But, A does not learn how to change its route to G. Also, F learns B has a new cost to G, but until F receives new information from other nodes it cannot change its next hop. So, the loop exists until more distance vectors are exchanged.

Name:_____

ECE 438/638: Computer Communications **Spring 2016**

Exam 2 (Each of the 4 problems is worth 25 points) **Monday, April 4**

Graduate students (638): For problem 1, you only need to answer any 8 of the short answer questions.

Undergraduate students (438): For problem 1, you only need to answer any 5 of the short answer questions. Extra credit earned on any extra answers will be added to your total homework score.

1 Short Answer. Your answer to each question should be twenty words or less.

1.1 How are forwarding tables built for learning bridges?

on test

each bridge inspects the source address in all the frames it receives when host A sends a frame to a host on either side of the bridge, the bridge receives this frame and records the fact that a frame from host A was received from port 1.

CHY 1.2 An autonomous system (AS), such as a large corporation, may have connections to more than one other AS, but it may refuse to carry transit traffic. With BGP, how does the AS implement a policy of not providing transit?

To implement a policy of not providing transit, the BGP speaker does not advertise routes to prefixes that are not contained within its AS

CHY 1.3 What is the purpose of the TTL field in an IPv4 header? What happened to the TTL field in IPv6?

1.4 A network that employs virtual-circuit forwarding must have a protocol to setup the virtual circuit before it can be utilized. One of the tasks during the setup phase is to assign the local virtual-circuit identifier (VCI) at each switch. Once the virtual circuit is setup, the packets are forwarded based on the VCI. How is the setup packet forwarded given that the local VCI's have not yet been established?

set up requests are routed like datagrams, using destination-based routing

1.5 An organization has a large number of LAN's and one DHCP server. How does a newly booted host find the DHCP server when the server is not located on the host's LAN?

it sends a DCHP DISCOVER message to a special IP address (255.255.255.255) that's an IP broadcast address, so it is received by all hosts and routers on that network. DCHP either receives that and replies to a new host or uses a relay agent.

CHY 1.6 Mobile IP is designed to work without any changes to non-mobile hosts and the majority of routers. Route optimization to avoid the triangle routing problem is accomplished when the home agent

sends the mobile's care-of-address (i.e., the foreign agent's address) to the sending node. The sending node can create a tunnel to the foreign agent. However, this fails if the mobile moves to a different network (and the foreign agent does not know where the mobile went). How can the connection from the sending node be restored after the mobile moves?

CH4 1.7 MPLS labels are usually 20 bits long. IPv4 addresses are 32 bits and IPv6 addresses are 128 bits. Explain why 20 bits provides enough labels when MPLS is used for destination-based forwarding.

1.8 The link-state algorithm requires that link-state packets (LSP's) be reliably flooded to all other routers. If a router receives an LSP from a neighbor *X*, how does it (a) determine if it should forward the LSP and (b) to which neighbors does it send the LSP?

a) if the sequence number is larger then stored in local LSP-database (and LSP has not timed out)

b) all neighbors except for nbr X

1.9 Protocol-independent multicast (PIM) was developed in response to the scaling problems of earlier protocols. On common problem with multicast protocols is how to determine if a router should participate in the multicast distribution tree. How does the PIM sparse mode (PIM-SM) handle determining if a router should join the tree?

CH4

A router explicitly adds itself to tree by sending join message to rendezvous point (RP). Routers that forward join messages add themselves to the tree

1.10 A host that receives an IP packet that has been fragmented must wait until it collects all of the fragments associated with this packet. What actions does that host take if, after a suitably long period of time, there are still one or more fragments missing?

The host gives up on the reassembly process and discards the fragments that did arrive

– IP does not attempt to recover from missing fragments

2 Spanning Tree Algorithm for Intelligent Bridges.

Suppose the spanning tree algorithm is used for the network shown to the right. The eight bridges numbered 1 to 8 run the spanning tree algorithm. Router R0 is connected to LAN H and provides a connection to the Internet.

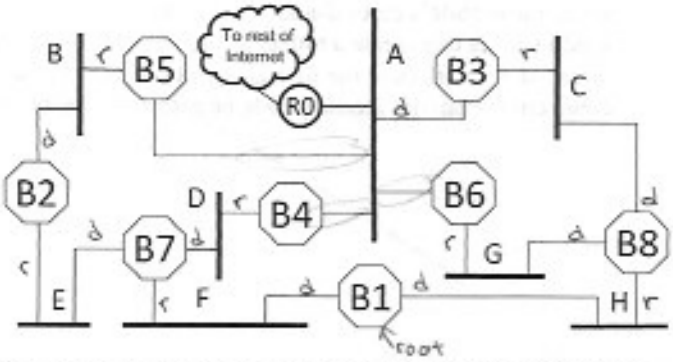

2.1 Indicate on the figure the spanning tree. Be sure to indicate the root port for each bridge (except the root bridge), the designated port for each LAN, and the links and bridges that do not participate in forwarding data frames.

B4, B5, B6 do participate in forwarding data frames

2.2 Assume that hosts attached to LAN B generate traffic with destinations found through the router to the rest of the network, and the bridges have learned which port to use for forwarding traffic between LAN D and RO. Which bridges forward frames generated by hosts on LAN D to RO?

B2 → B7 → B1 → B8 → B3 → RO

2.3 Assume that hosts attached to LAN's E, F, G, and H generate traffic with destinations found through the router to the rest of the network. Renumber the bridges so that the traffic from the hosts on LAN E traverses LAN B to LAN A, LAN F traverses LAN D to A, LAN H traverses LAN C to A and LAN G forward directly to LAN A. Draw the resulting spanning tree in the figure below showing the new bridge numbers and root and designated ports. You can only change the numbers assigned to the bridges (e.g., links cannot be moved and no new links can be added).

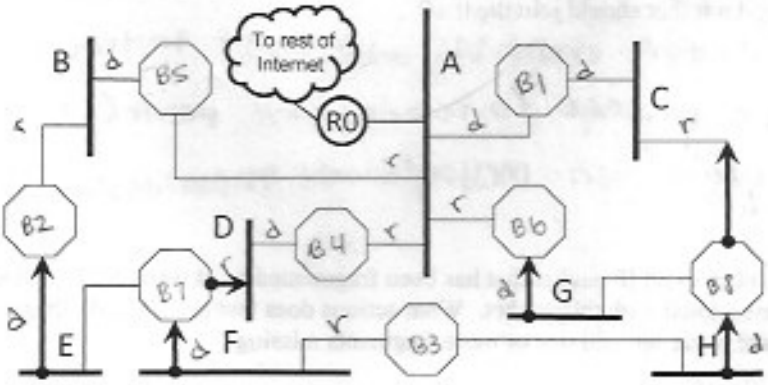

Class B

	14	16

2048	1024	512	256	128	64	32	16	8	4	2	1
	1		1		1						

3 IP Forwarding, LAN Forwarding, ARP, and Subnet Masks.

Suppose an organization has been assigned one Class B address with network number 130.2.0.0, and wants to form subnets for three LAN's, with hosts as follows.

384 LAN A: 375 hosts 512
196 LAN B: 180 hosts 256 10|100 00 010|0010
196 LAN C: 180 hosts 256

3.1 Give a subnet number and mask for each LAN assuming that only one subnet can be assigned to each LAN.

512
256
256

LAN	subnet number	subnet mask	num addr	addr range
A	130.2.2.0	255.255.254.0	512	
B	130.2.4.0	255.255.255.0	256	
C	130.2.5.0	255.255.255.0	256	

3.2 A more efficient assignment of the available address space is possible if multiple subnets can be assigned to each LAN. Give an assignment of subnet numbers and masks such that each LAN is assigned at most 2 subnets and the fewest number of addresses are assigned.

A 256
A 128
B 128
B 64
B 64
C 128

LAN	subnet	mask	num addr	addr range
A	130.2.1.0	255.255.255.0	256	1.0 - 1.255
A	130.2.2.0	255.255.255.128	128	2.0 - 2.127
B	130.2.2.128	255.255.255.128	128	2.128 - 2.255
B	130.2.3.0	255.255.255.192	64	3.0 - 3.63
C	130.2.3.64	255.255.255.192	64	3.64 - 3.127
C	130.2.3.128	255.255.255.128	128	3.128 - 3.255

3.3 Consider a single LAN and assume two subnets have been assigned to this LAN. Suppose that H1 is assigned to one subnet and H2 the other subnet, and both hosts are connected to the LAN. Assume that IP address and subnet masks are correctly assigned for all hosts and routers, and hosts are configured with their own IP address, subnet mask, and a default route to R1 (i.e., hosts do not know there are multiple subnets on this LAN). Give the sequence of *all* Ethernet frames that are transmitted on the LAN's when H1 has an IP packet to forward for H2. For each Ethernet frame, specify its destination address and the type of packet the frame contains. (Assume that network has been idle long enough so that all ARP caches have timed out. Also, assume H1 knows H2's IP address.) H1 knows H2 is not on H1's subnet, so H1 forwards the IP packet to its default router. It takes 6 Ethernet frames to deliver the packet.

8HU

4 Distance-vector routing.

Consider a network with nodes A, B, C, and D and each node executes a distributed distance-vector protocol that includes split horizon with poison reverse and triggered updates. If a node calculates a new route to a destination or updates a new cost for an existing route to a destination, then it generates a triggered update. A node stores the most recent distance vector (DV) it has received from each of its neighbors. The initial link costs are all equal to one. The propagation delay on all links is 10ms. Below are the initial tables of stored DV's and the route *with respect to routes to node D only*. (We will ignore all other routes for this problem.)

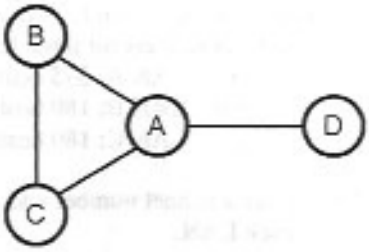

DV tables at t=0

Node A	Node B	Node C
via D (dest=D, cost=0)	via A (dest=D, cost=1)	via A (dest=D, cost=1)
via B (dest=D, cost=∞)	via C (dest=D, cost=2)	via B (dest=D, cost=2)
via C (dest=D, cost=∞)		

Routes at t=0

(dest=D, cost=1, next=D)	(dest=D, cost=2, next=A)	(dest=D, cost=2, next=A)

At time t=10ms, the cost of the link from A to D increases from 1 to 10. Node A updates its routing table and sends a triggered update:

Routes at t=10ms

(dest=D, cost=10, next=D)	no change	no change

Triggered updates sent at t=10ms

Node A	Node B	Node C
send to B: (D, 10)	nothing	nothing
send to C: (D, 10)		

DV tables at t=20

Node A	Node B	Node C
via D (dest=D, cost=0)	via A (dest=D, cost=10)	via A (dest=D, cost=10)
via B (dest=D, cost=∞)	via C (dest=D, cost=2)	via B (dest=D, cost=2)
via C (dest=D, cost=∞)		

Question 4.1: What is the new routing information at nodes B and C (write answers in boxes)?

Routes at t=20

(dest=D, cost=10, next=D)	(dest=D, cost= , next=)	(dest=D, cost= , next=)

Question 4.2: What (if any) triggered updates are sent by nodes B or C (write answers in boxes)?

Triggered updates sent at t=20ms

Node A	Node B	Node C
send to B: nothing	send to A: (D,)	send to A: (D,)
send to C: nothing	send to C: (D,)	send to B: (D,)

CHM

Question 4.3: Update the DV tables (if needed) at nodes A, B, and C. Update the routes to node D (if needed), and specify what (if any) triggered updates are sent by nodes A, B, and C. Write answers in the boxes.

DV tables at t=30

Node A	Node B	Node C
via D (dest=D, cost=0)	via A (dest=D, cost=10)	via A (dest=D, cost=10)
via B (dest=D, cost=)	via C (dest=D, cost=)	via B (dest=D, cost=)
via C (dest=D, cost=)		

Routes at t=30

(dest=D, cost= , next=)	(dest=D, cost= , next=)	(dest=D, cost= , next=)

Triggered updates sent at t=30ms

Node A	Node B	Node C
send to B:	send to A:	send to A:
send to C:	send to C:	send to B:

Question 4.4. Have the routing tables converged to the final values, or are additional iterations required because of the count-to-infinity problem?

Partial Solutions. You must show your work.

2.1. Show that bridges 4, 5, and 6 do not forward frames. Note tie for B5 root port and LAN A designated port.
2.2. B2 -> B7 -> B1 -> B8 -> B3
2.3. Many solutions are possible. One relabels B3 as B1. Watch for ties at LANs E, F, and G

3.1. One solution.

LAN	subnet	Mask	Num. Addr	range
A	130.2.2.0	255.255.254.0	512	2.0—3.255
B	130.2.4.0	255.255.255.0	256	4.0—4.255
C	130.2.5.0	255.255.255.0	256	5.0—5.255

3.2. One solution

LAN	subnet	Mask	Num. Addr
A	130.2.1.0	255.255.255.0	256
	130.2.2.0	255.255.255.128	128
B	130.2.2.128	255.255.255.128	128
	130.2.3.0	255.255.255.192	64
C	130.2.3.64	255.255.255.192	64
	130.2.3.128	255.255.255.128	128

3.3. H1 knows that H2 is NOT on H1's subnet. So, H1 forwards the IP packet to its default router. It takes 6 Ethernet frames to deliver the packet. You need to list the frames and the type of each frame. (ICMP redirect can also be part of the answer.)

4. This problem examines the use of poison reverse. B poisons C, and C poisons B. However, 4.3 shows that "bad" information is still in the tables. There is a loop and additional iterations are required. It turns out that 9 additional iterations are needed for the routes to finally converge (all that is required is to identify the problem but not to count the number of iterations).

Name:_____

ECE 438/638: Computer Communications **Fall 2009**

Exam 2 **Friday, November 13**

Each of the 4 problems is worth 25 points.

Graduate students (638): For problem 1, you only need to answer any 8 of the short answer questions.

Undergraduate students (438): For problem 1, you only need to answer any 5 of the short answer questions. Extra credit earned on any extra answers will be added to your total homework score.

1 Short Answer. Your answer to each question should be twenty words or less.

1.1 What are the three pieces of information that are included in the configuration messages for the spanning tree algorithm?

AS: anonymous system

1) the ID for the bridge that is sending the message

2) the ID for what the sending bridge believes to be the root bridge

3) the distance, measured in hops, from the sending bridge to the root bridge

CH4

1.2 How does a BGP speaker know if a route advertised by another speaker contains a loop?

BGP: Border Gateway Protocol (path-vector)

prevents loops by carrying the complete AS path in the routing messages

if the path recieved for that AS from another AS contains itself, concludes that is a loop and not a useful path to use.

1.3 What traditional network class was under the most pressure before classless interdomain routing (CIDR)? Why?

class C, can only hold 255 hosts

1.4 Switching with source routing requires a variable length header. When a packet arrives at a switch, the switch must determine how to read the header. There are a number of possible solutions to handling headers for source routing. Describe one approach.

- each switch can strip the first element as it uses it.
- header carry a pointer to the current "next port" entry, so each switch just updates the pointer rather than rotating the header
- each switch rotates the list after it has read its own entry

[rotating, stripping, pointer]

1.5 An IP tunnel is a virtual point-to-point link between a pair of routers that are actually separated by an arbitrary number of networks. What information in the IP header indicates to the router at the destination of the tunnel that an IP packet that it has received has arrived through the tunnel?

the router sending the packet through the tunnel adds an IP header addressed to the router at the destination of the tunnel. when the destination router recieves the packet, it finds it carries its own address. It removes the IP header & looks at the payload of the packet which has an inner IP packet and processes the packet like any other IP packet it recieves

1.6 When using distance-vector routing, certain circumstances can prevent the routing tables for the network from stabilizing. What is this problem known as?

Count to infinity problem

CH4
1.7 Protocol-independent multicast (PIM) was developed in response to the scaling problems of earlier protocols. In PIM sparse mode (PIM-SM), routers explicitly join the multicast distribution tree using PIM protocol messages known as Join messages. Where does a router send the Join message?

1.8 ~~The ATM Adaptation Layer 5 protocol has significantly lower overhead than ATM Adaptation Layer 3/4. What key feature enabled this improvement?~~

1.9 Clemson University's network has a very large number of LAN's but just one DHCP server. How does a newly booted host find the DHCP server?

it sends a DHCPDISCOVER message to a special IP address (255.255.255.255) that is an IP broadcast address. So it is recieved by all hosts and routers on that network. DHCP either recieves that and replys to new host or uses a relay agent

1.10 Suppose a dynamic routing algorithm is employed to try and make routing tables correspond to least cost paths. What types of routing metrics are prone to producing load oscillations?

original ARPANET and
second version of ARPANET
• new routing mechanism

2 Bellman-Ford Algorithm

Assume the Bellman-Ford algorithm is executed synchronously, for the network shown to the right. Each link is labeled with its distance, and the distance is the same for both directions of the link.

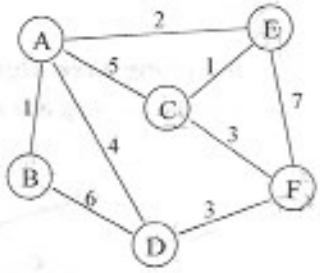

After the first iteration, each node knows the distances to its immediate neighbors only, as shown in the table below.

Information stored at Node	Distance to Reach Node					
	A	B	C	D	E	F
A	--	1	5	4	2	∞
B	1	--	∞	6	∞	∞
C	5	∞	--	∞	1	3
D	4	6	∞	--	∞	3
E	2	∞	1	∞	--	7
F	∞	∞	3	3	7	--

2.1 Iteration 2: update each node's distance to each destination using the information its neighbors learned in the previous iteration.

Information stored at Node	Distance to Reach Node					
	A	B	C	D	E	F
A	--	1	→ 3 ←	4	2	→ 7 ←
B	1	—	6	5	3	9
C			—	6	1	3
D				—	6	3
E					—	4
F						—

2.2 Iteration 3: repeat previous iteration.

Information stored at Node	Distance to Reach Node					
	A	B	C	D	E	F
A	--	1	3	4	2	→ 6 ←
B		—	4	5	3	8
C			—	6	1	3
D				—	6	3
E					—	4
F						—

2.3 Has the synchronous Bellman-Ford algorithm converged to its final state, or will additional iterations lower any of the costs?

B → A → E → C → F

2.4 If different distances are assigned to the links, what is the largest number of iterations that may be required?

3 Spanning Tree Algorithm for Intelligent Bridges.

Suppose the spanning tree algorithm is used for the network shown below.

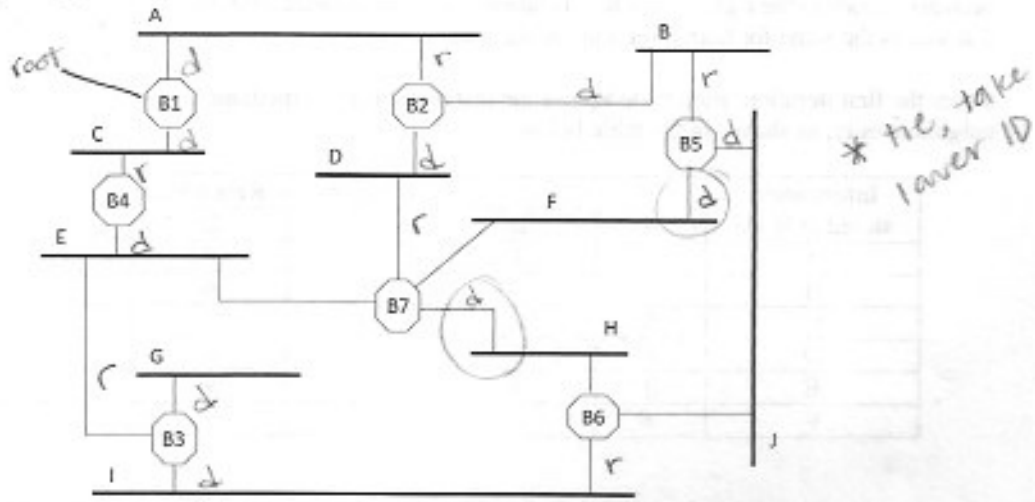

3.1 Indicate on the figure the spanning tree. Be sure to indicate the root port for each bridge (except the root bridge), the designated port for each LAN, and the links and bridges that do not participate in forwarding data frames. B7: E, F , B6: all links do not forward data

3.2 After the spanning tree algorithm has settled, which station will transmit configuration messages onto LAN F? Onto LAN H?

LANF: B5 *designated ports

LANH: B7

3.3 Which bridges(s) will forward the configuration messages that are broadcast on LAN E? On LAN J?

LANE: B3

LANJ: none *root port

A bridge will forward these messages only if it receives the message on its root port. It forwards a spanning tree configuration message on all of its designated ports

Caroline

128	64	32	16	8	4	2	1
0	0	0	0	0	0	0	0

4 Subnet Masks, IP Forwarding, and CIDR.

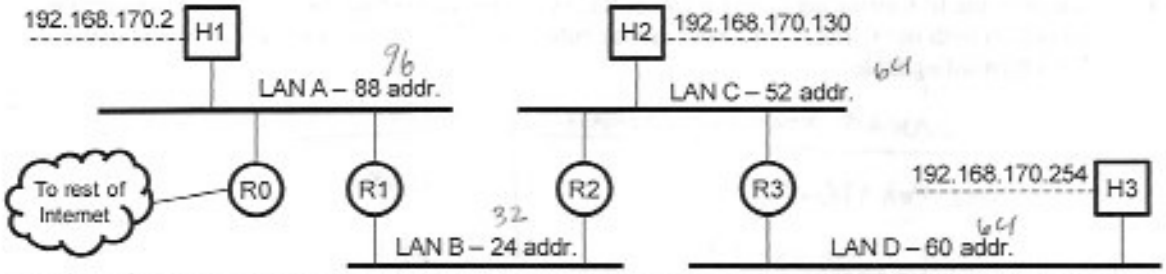

Suppose an organization has been assigned one Class C address with network number 192.168.170. The organization uses subnets to configure four local area networks (LANs) shown in the figure. The organization needs 88 IP addresses for LAN A, 24 IP addresses for LAN B, 52 IP addresses for LAN C, and 60 IP addresses for LAN D. Furthermore, the three hosts, H1, H2, and H3 must have the IP addresses shown in the figure.

4.1 List the subnet numbers and mask assignments for all LANs. 192.168.170

bits for addresses

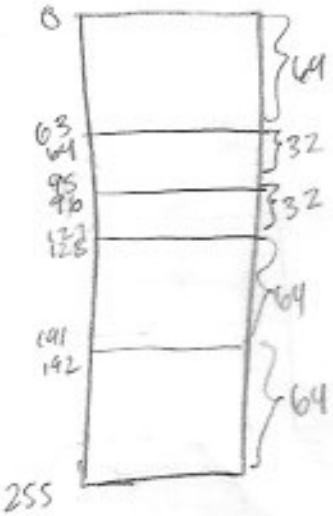

LAN	subnet number	mask	addr range
A	192.168.170.0	255.255.255.192	0-63
A	192.168.170.64	255.255.255.224	64-95
B	192.168.170.96	255.255.255.224	96-127
C	192.168.170.128	255.255.255.192	128-191
D	192.168.170.192	255.255.255.192	192-255

4.2 Give the IP forwarding table for router R1, assuming the routing protocol and IP forwarding algorithm both use subnets but not CIDR. There must be an entry for the Internet.

subnet num	subnet mask	next hop
192.168.170.0	255.255.255.192	LAN A
192.168.170.64	255.255.255.224	LAN A
192.168.170.96	255.255.255.224	LAN B
192.168.170.128	255.255.255.192	R2
192.168.170.192	255.255.255.192	R2
Default		R0

A (0 0000 0000, 64 0100 0000)
B (96 0110 0000)
R2 (128 1000 0000, 192 1100 0000)

4.3 Simplify the IP forwarding table for router R1, assuming the routing protocol and IP forwarding algorithm both use CIDR. You must use the rules for CIDR to minimize the number of entries in R1's forwarding table.

R1

96: 011p|000

subnet number/mask	next
192.168.170.0/25	LANA
192.168.170.96/27	LANB
192.168.170.128/25	R2
Default	R0

Sample Exam 2, Fall 2009

1.1. Page 198
1.2. Page 318-319
1.3. Page 225
1.4. Page 188-189, Fig. 3.8
1.5. Page 238, Fig. 3.27
1.6. Page 248
1.7. Page 344
1.8. No longer applicable, ATM material cut
1.9. Page 233 and Fig. 3.24
1.10. Page 264-265

2.1 (Notice this is minimum cost among 1 and 2 hop routes)

Info	A	B	C	D	E	F
A	--	1	3	4	2	7
B	1	-	6	5	3	9
C	3	6	-	6	1	3
D	4	5	6	-	6	3
E	2	3	1	6	-	4
F	7	9	3	3	4	-

2.2 (Notice this is minimum cost among 1,2, and 3 hop routes)

Info	A	B	C	D	E	F
A	--	1	3	4	2	6
B	1	-	4	5	3	8
C	3	4	-	6	1	3
D	4	5	6	-	6	3
E	2	3	1	6	-	4
F	6	8	3	3	4	-

2.3 An additional iteration will improve B -> A -> E -> C -> F since this is a 4 hop route

2.4. One iteration per hop in the worst case. For this network 5 iterations. Additional iterations produce no changes.

3.1 Let designated ports be labeled (D:) and root ports (R:)

B1 – D: A, C
B2 – D: B, D, R: A
B3 – D: G, I, R: E
B4 – D: E, R: C
B5 – D: F, J, R: B
B6 – D: none, R: I
B7 – D: H, R: D

So, links B7 to E, B7 to F, and all links at B6 do not participate in forwarding data packets

3.2

LAN F – B5
LAN H – B7

3.3

LAN E – only B3 (not B7)
LAN J – none

The key is a bridge will forward these messages only if it receives the message on its root port. It forwards a spanning tree configuration message on all of its designated ports.

4.1 Here is one possible solution

LAN	subnet	mask	address ranges
A	192.168.170.0	255.255.255.192	0-63
A	192.168.170.64	255.255.255.224	64-95
B	192.168.170.96	255.255.255.224	96-127
C	192.168.170.128	255.255.255.192	128-191
D	192.168.170.192	255.255.255.192	192-255

4.2. Every IP address must match exactly one row

Subnet	mask	next
192.168.170.0	255.255.255.192	LAN A
192.168.170.64	255.255.255.224	LAN A
192.168.170.96	255.255.255.224	LAN B
192.168.170.128	255.255.255.192	R2
192.168.170.192	255.255.255.192	R2
Default	-	R0

4.3. Aggregate addresses that use R2 as next hop. Use longest match rule to LAN B and aggregate LAN A's addresses.

Subnet/mask	next
192.168.170.0/25	LAN A
192.168.170.96/27	LAN B
192.168.170.128/25	R2
Default	R0