On the Subject of Black & White

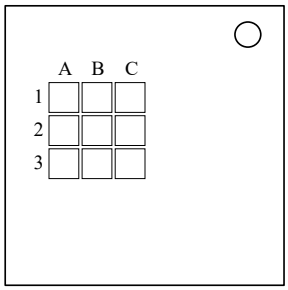

Sometimes it is only a matter of Black and White.
Usually you can change your mind about a wrong choice...usually...not always...

You are given a grid of white squares.
You must find which squares must become black.
Simply click them to change their color.
The number of strikes refers to when the module is created
Solution is automatically submitted when correct.

Indicators

Indicators always refer to a group of 2 horizontal squares.
If at least one of the indicators is lit, the first square is black, the second is white.
Otherwise the first square is white, the second is black.

Row to look	Indicator
1	SND - IND
2	MSA - TRN
3	CLR - CAR
4	BOB - NSA
5	FRQ - SIG
6	FRK

If the indicator is not present, both squares must be white.

Timer

This square is always black, but it must be pressed when on the timer there is a digit corresponding to the square's line number in any position.

Serial Number Last

If the last digit of the serial number is even, this square must be black otherwise it must be white.

Serial Number Sum

Sum every digit in the serial number.
If the result is odd, this square must be black, otherwise it must be white.

Ports and Modules

		Port to find	Square Color
Row	1-2	Stereo RCA	Total modules are even: black Total modules are odd: white
	3-4	DVI-D	Total modules are even: white Total modules are odd: black
	5	Parallel	Solved modules are even: black Solved modules are odd: white
	6	RJ-45	Solved modules are even: white Solved modules are odd: black

If no one of the previous cases matches, the square is white.

PM

Batteries

Batteries on the map always refer to a group of 2 vertical squares.

	Column is odd (A-C-E)		Column is even (B-D-F)	
There are only AA Batteries	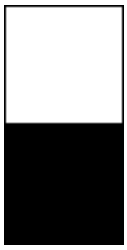		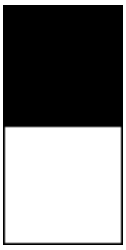	
There are only D Batteries	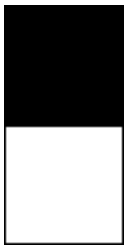		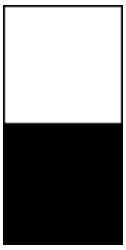	
There are AA and D Batteries	Battery on the map is facing upwards		Battery on the map is facing upwards	
	Battery on the map is facing downwards		Battery on the map is facing downwards	

If there aren't batteries, both squares must be white

Maps

3x3 Schemes

No Strikes	1 Strike	2 Strikes
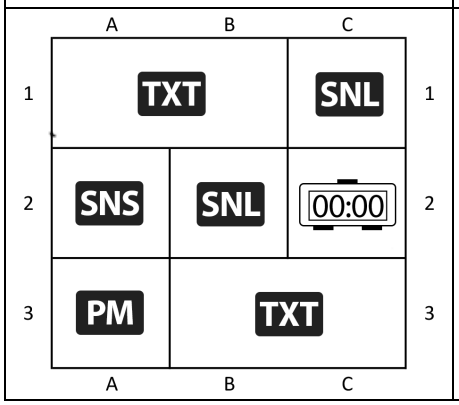	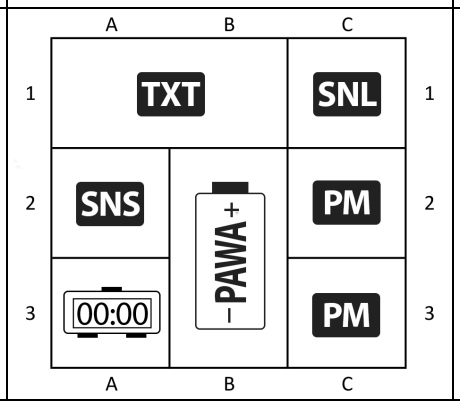	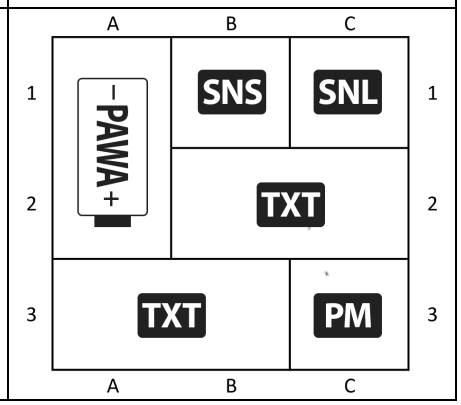

4x4 Schemes

No Strikes	1 Strike	2 Strikes
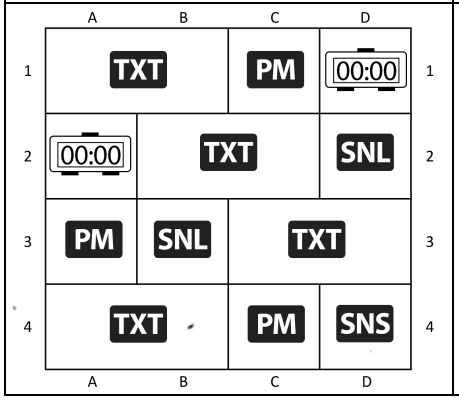	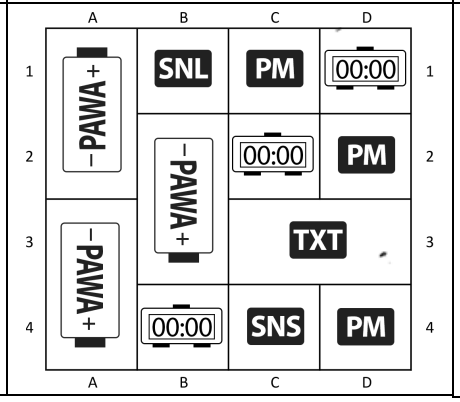	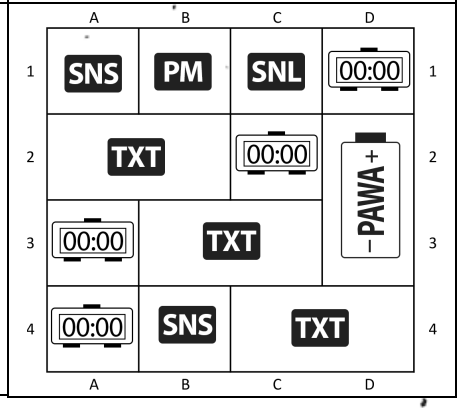

5x5 Schemes

No Strikes	1 Strike	2 Strikes
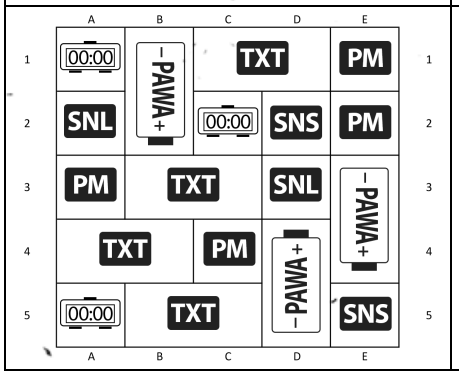	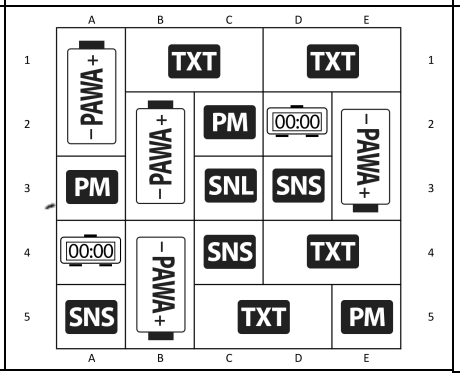	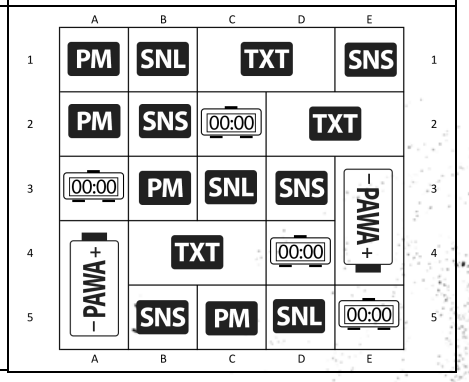

6x6 Schemes

No Strikes

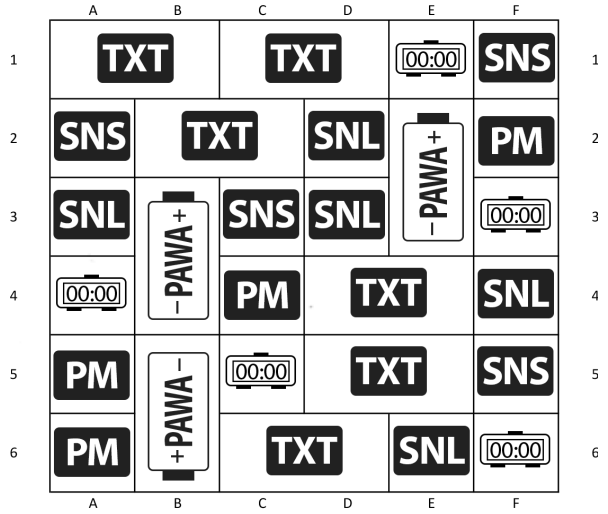

1 Strike

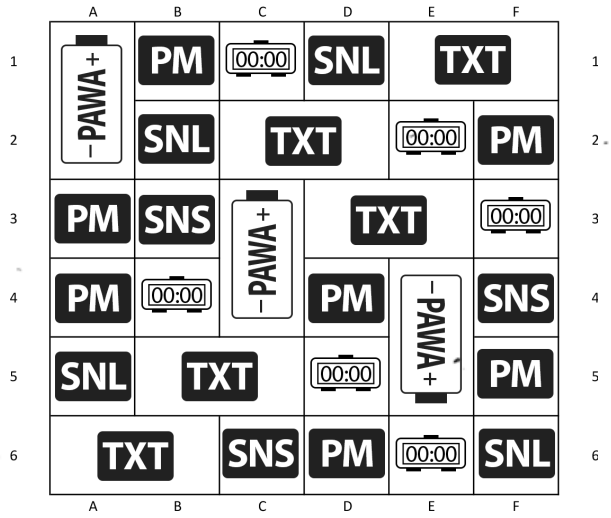
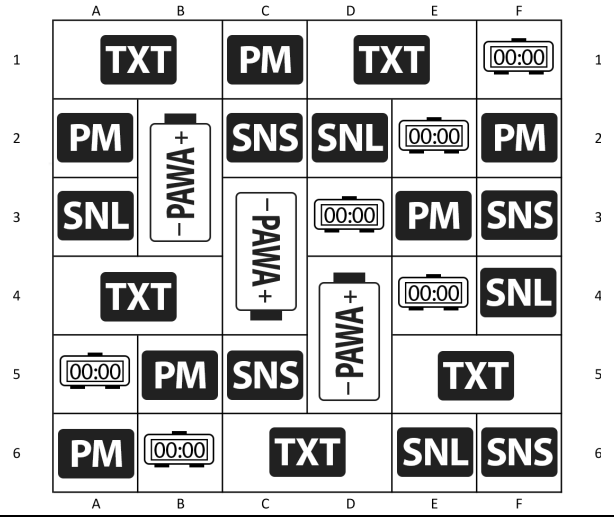
2 Strikes