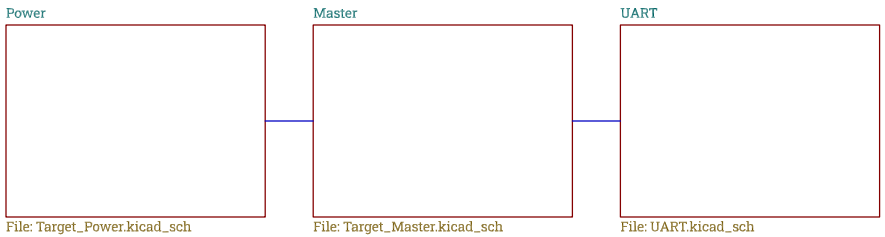

Idaho State University | Robotics & Communications Systems Engineering Technology

Robotics & Communications Engineering Technology
1152 Martin Luther King Jr. BLVD
Pocatello, ID 83209
Drawn By: Andrew Keller
Idaho State University

Title: Laser Arcade Master

Size: A	Date: 2025-12-18	**Rev: B**
KiCad E.D.A. 9.0.5		Id: 123

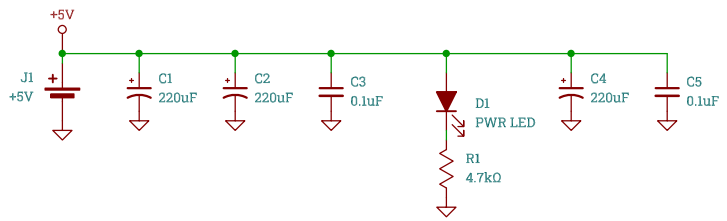

Idaho State University | Robotics & Communications Systems Engineering Technology

Robotics & Communications Engineering Technology
1152 Martin Luther King Jr. BLVD
Pocatello, ID 83209
Drawn By: Andrew Keller
Idaho State University

Title: Laser Arcade Master / Power

Size: A	Date: 2025-12-18	**Rev: B**
KiCad E.D.A. 9.0.5		Id: 124

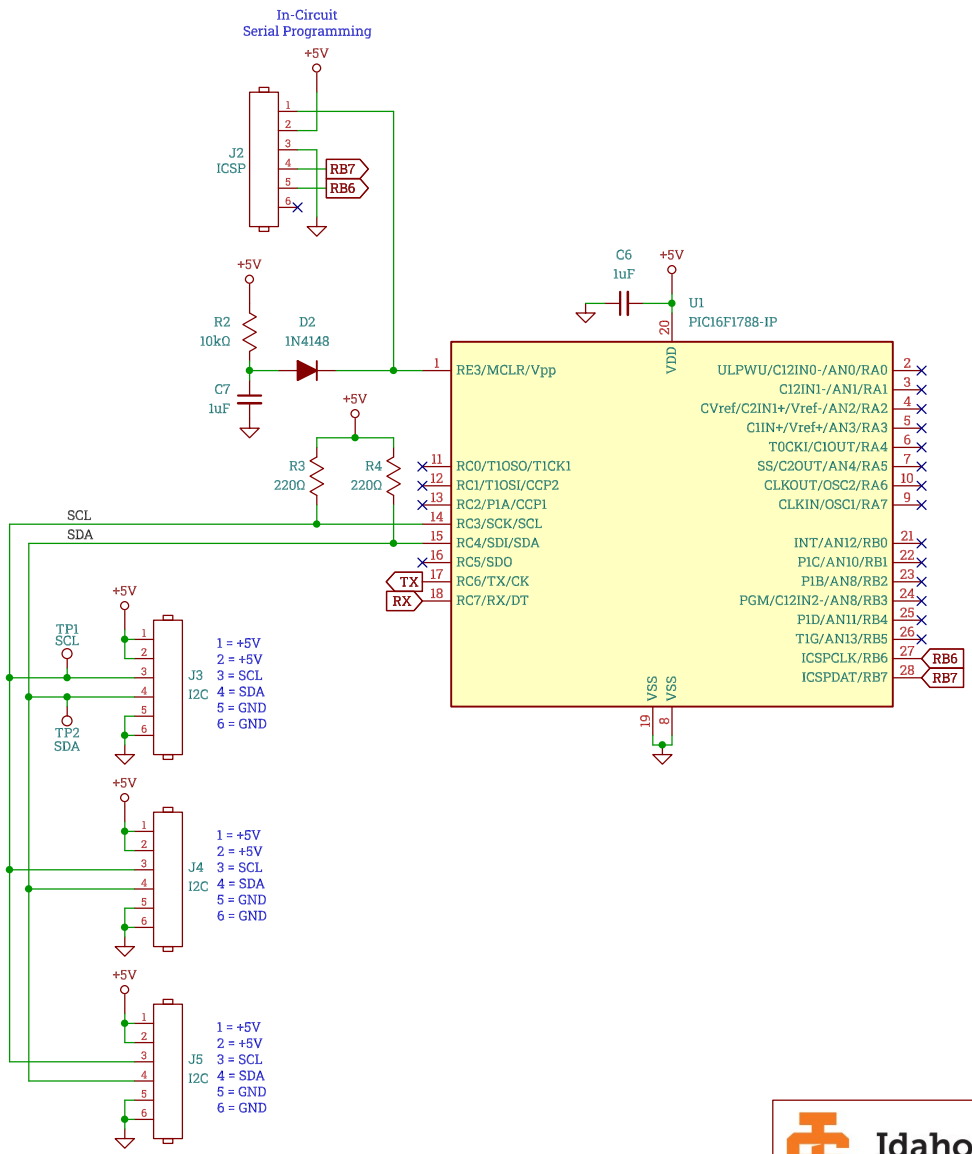

Idaho State University | Robotics & Communications Systems Engineering Technology

Robotics & Communications Engineering Technology
1152 Martin Luther King Jr. BLVD
Pocatello, ID 83209
Drawn By: Andrew Keller
Idaho State University

Title: Laser Arcade Master / Master

Size: A	Date: 2025-12-18	**Rev: B**
KiCad E.D.A. 9.0.5		Id: 125

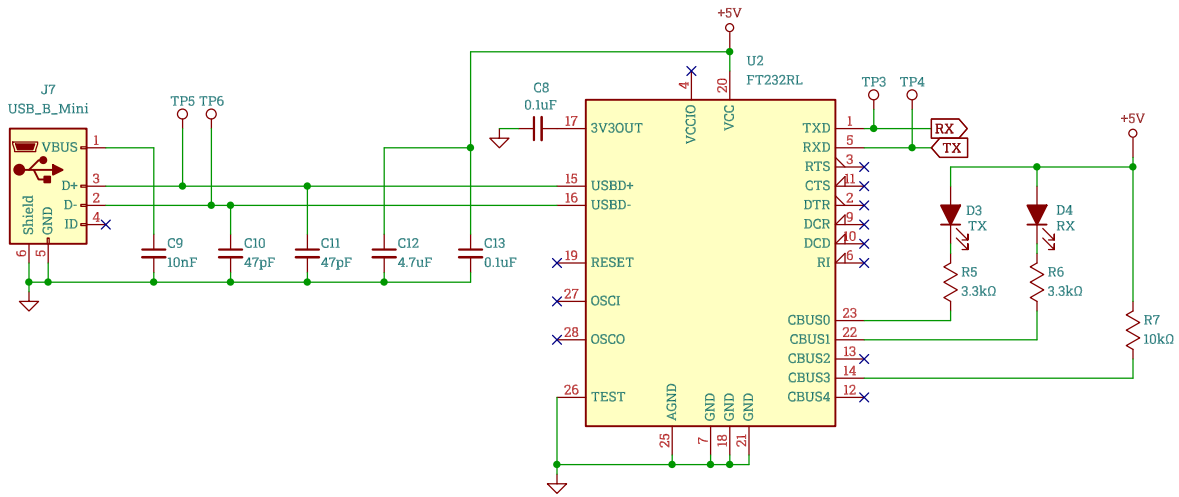

Idaho State University | Robotics & Communications Systems Engineering Technology

Robotics & Communications Engineering Technology
1152 Martin Luther King Jr. BLVD
Pocatello, ID 83209
Drawn By: Andrew Keller
Idaho State University

Title: Laser Arcade Master / UART

Size: A	Date: 2025-12-18	**Rev: B**
KiCad E.D.A. 9.0.5		Id: 126