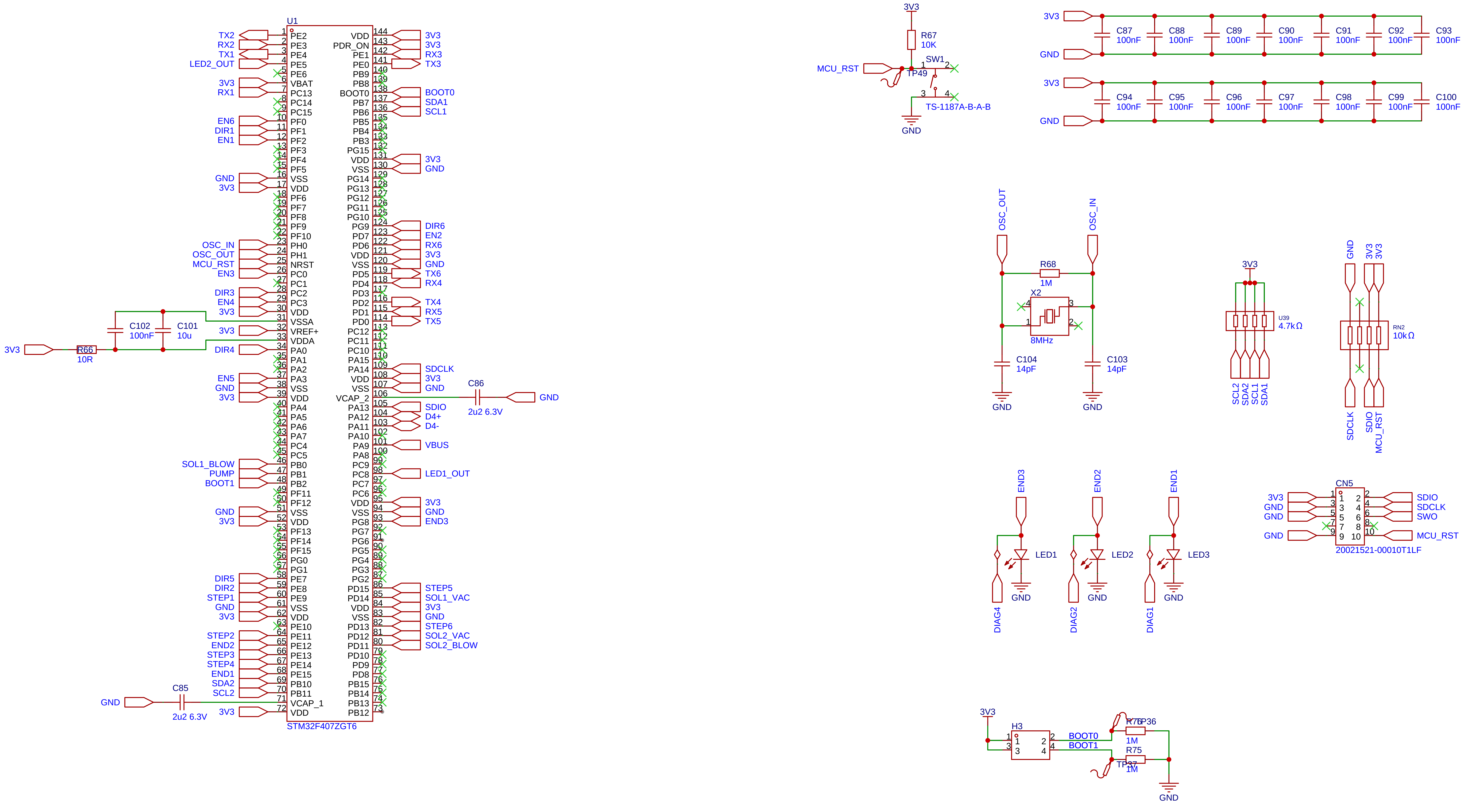
U1
STM32F407ZGT6
TX2
RX2
TX1
LED2_OUT
3V3
RX1
EN6
DIR1
EN1
GND
OSC_IN
OSC_OUT
MCU_RST
EN3
DIR3
EN4
DIR4
EN5
SOL1_BLOW
PUMP
BOOT1
DIR5
DIR2
STEP1
STEP2
END2
STEP3
STEP4
END1
SDA2
SCL2
BOOT0
SDA1
SCL1
DIR6
EN2
RX6
TX6
RX4
TX4
RX5
TX5
SDCLK
SDIO
D4+
D4-
VBUS
LED1_OUT
END3
STEP5
SOL1_VAC
STEP6
SOL2_VAC
SOL2_BLOW
RX3
TX3
C102
100nF
C101
10u
R66
10R
C85
2u2 6.3V
C86
2u2 6.3V
R67
10K
SW1
TP49
TS-1187A-B-A-B
C87 C88 C89 C90 C91 C92 C93
C94 C95 C96 C97 C98 C99 C100
100nF
R68
1M
X2
8MHz
C104
14pF
C103
14pF
U39
4.7kΩ
RN2
10kΩ
SWO
CN5
20021521-00010T1LF
LED1
LED2
LED3
DIAG4
DIAG2
DIAG1
H3
R76
TP36
R75
TP37
1M

Schematic	Mainboard	Create at	2025-02-10
		Update at	2025-04-17
Board	Mainboard	Page	MCU
Drawn	Giovanni C.	OrionPnP-Core	
Reviewed			

Version	Size	Page 1 Total 6
V0.2a	A3	EasyEDA.com

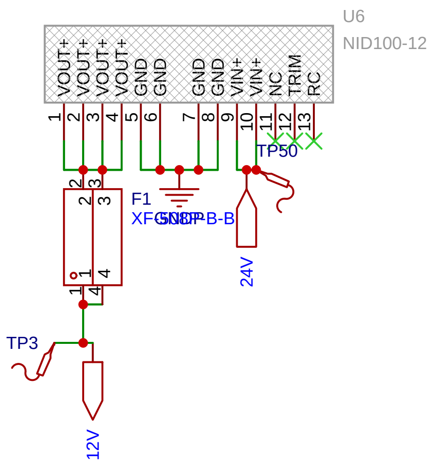
U6
NID100-12
VOUT+
VOUT+
VOUT+
VOUT+
GND
GND
GND
GND
VIN+
VIN+
NC
TRIM
RC
1
2
3
4
5
6
7
8
9
10
11
12
13
TP50
F1
XF-508P-B-B
GNDP
24V
TP3
12V

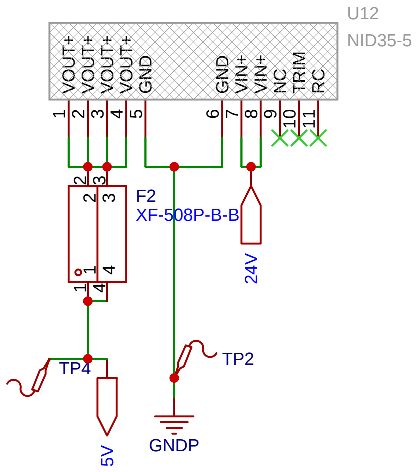
U12
NID35-5
VOUT+
VOUT+
VOUT+
VOUT+
GND
GND
VIN+
VIN+
NC
TRIM
RC
1
2
3
4
5
6
7
8
9
10
11
F2
XF-508P-B-B
24V
TP4
5V
TP2
GNDP

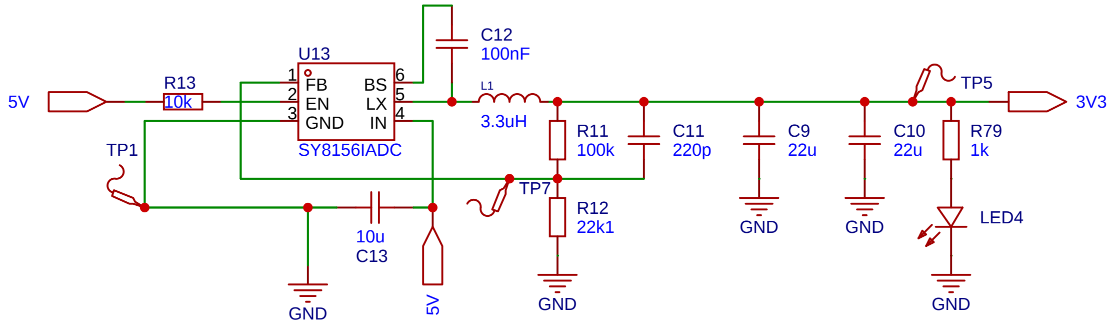
5V
R13
10k
TP1
U13
FB
EN
GND
BS
LX
IN
SY8156IADC
C12
100nF
L1
3.3uH
R11
100k
C11
220p
C9
22u
C10
22u
R79
1k
TP5
3V3
TP7
R12
22k1
10u
C13
LED4
GND
GND
GND
GND
GND
5V

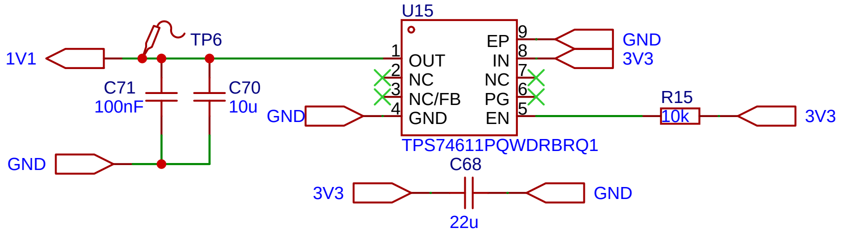
1V1
TP6
C71
100nF
C70
10u
GND
GND
U15
OUT
NC
NC/FB
GND
EP
IN
NC
PG
EN
TPS74611PQWDRBRQ1
GND
3V3
R15
10k
3V3
C68
3V3
22u
GND

Schematic	Mainboard		Create at	2025-02-10
			Update at	2025-04-17
Board	Mainboard		Page	PWR
Drawn	Giovanni C.	OrionPnP-Core		
Reviewed				
		Version	Size	Page 2 Total 6
EasyEDA		V0.2a	A3	EasyEDA.com

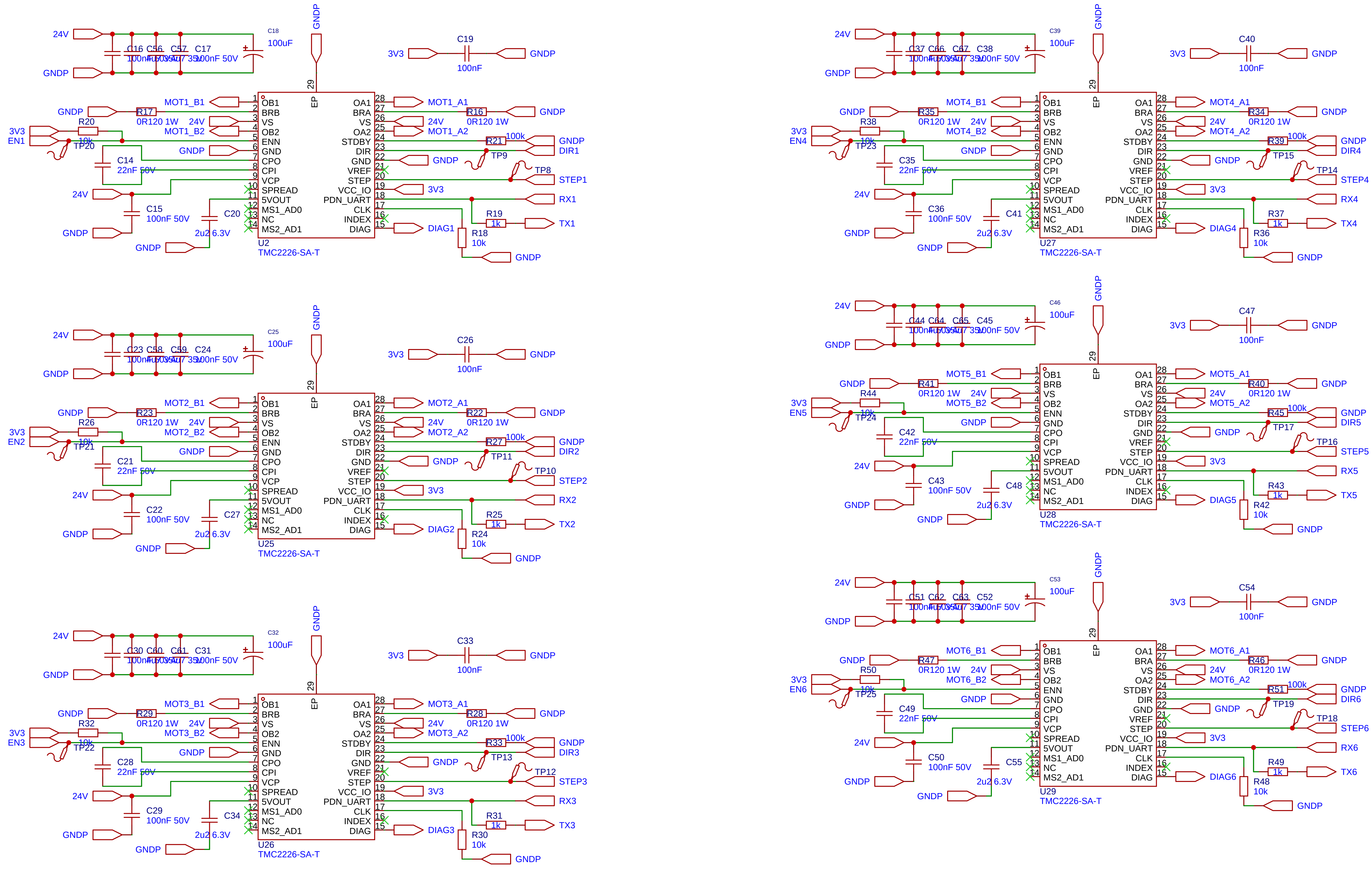
24V
GNDP
C16 C56 C57 C17
100nF 50V
C18
100uF
3V3
C19
100nF
MOT1_B1
MOT1_A1
R17
0R120 1W
R16
3V3
EN1
R20
10k
TP20
MOT1_B2
MOT1_A2
C14
22nF 50V
R21
100k
DIR1
TP9
TP8
STEP1
C15
100nF 50V
C20
2u2 6.3V
RX1
R19
1k
TX1
DIAG1
R18
10k
U2
TMC2226-SA-T
OB1
BRB
VS
OB2
ENN
GND
CPO
CPI
VCP
SPREAD
5VOUT
MS1_AD0
NC
MS2_AD1
EP
OA1
BRA
VS
OA2
STDBY
DIR
GND
VREF
STEP
VCC_IO
PDN_UART
CLK
INDEX
DIAG
C23 C58 C59 C24
C25
C26
MOT2_B1
MOT2_A1
R23
R22
EN2
R26
TP21
MOT2_B2
MOT2_A2
C21
R27
DIR2
TP11
TP10
STEP2
C22
C27
RX2
R25
TX2
DIAG2
R24
U25
C30 C60 C61 C31
C32
C33
MOT3_B1
MOT3_A1
R29
R28
EN3
R32
TP22
MOT3_B2
MOT3_A2
C28
R33
DIR3
TP13
TP12
STEP3
C29
C34
RX3
R31
TX3
DIAG3
R30
U26
C37 C66 C67 C38
C39
C40
MOT4_B1
MOT4_A1
R35
R34
EN4
R38
TP23
MOT4_B2
MOT4_A2
C35
R39
DIR4
TP15
TP14
STEP4
C36
C41
RX4
R37
TX4
DIAG4
R36
U27
C44 C64 C65 C45
C46
C47
MOT5_B1
MOT5_A1
R41
R40
EN5
R44
TP24
MOT5_B2
MOT5_A2
C42
R45
DIR5
TP17
TP16
STEP5
C43
C48
RX5
R43
TX5
DIAG5
R42
U28
C51 C62 C63 C52
C53
C54
MOT6_B1
MOT6_A1
R47
R46
EN6
R50
TP25
MOT6_B2
MOT6_A2
C49
R51
DIR6
TP19
TP18
STEP6
C50
C55
RX6
R49
TX6
DIAG6
R48
U29

Schematic	Mainboard	Create at	2025-02-10
		Update at	2025-04-17
Board	Mainboard	Page	STEPPER
Drawn	Giovanni C.	OrionPnP-Core	
Reviewed			
Version	Size	Page 3 Total 6	
V0.2a	A3	EasyEDA.com	

1x axis X
1x axis Y1
1x axis Y2
1x axis Z
1x axis Rot1
1x axis Rot2

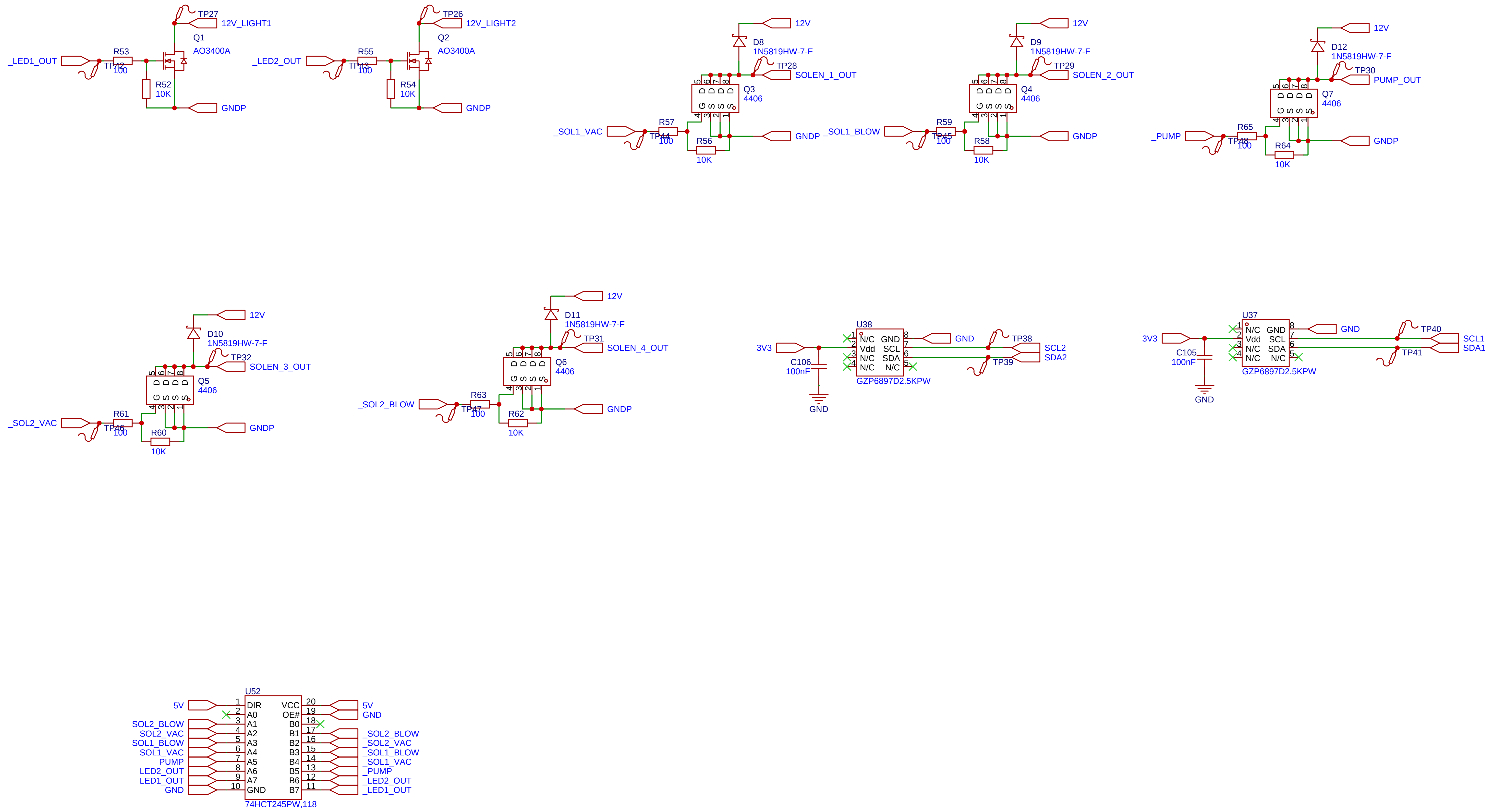
TP27
12V_LIGHT1
Q1
AO3400A
_LED1_OUT
R53
TP42
100
R52
10K
GNDP
TP26
12V_LIGHT2
Q2
AO3400A
_LED2_OUT
R55
TP43
100
R54
10K
GNDP
12V
D8
1N5819HW-7-F
TP28
SOLEN_1_OUT
Q3
4406
_SOL1_VAC
R57
TP44
100
R56
10K
GNDP
12V
D9
1N5819HW-7-F
TP29
SOLEN_2_OUT
Q4
4406
_SOL1_BLOW
R59
TP45
100
R58
10K
GNDP
12V
D12
1N5819HW-7-F
TP30
PUMP_OUT
Q7
4406
_PUMP
R65
TP48
100
R64
10K
GNDP
12V
D10
1N5819HW-7-F
TP32
SOLEN_3_OUT
Q5
4406
_SOL2_VAC
R61
TP46
100
R60
10K
GNDP
12V
D11
1N5819HW-7-F
TP31
SOLEN_4_OUT
Q6
4406
_SOL2_BLOW
R63
TP47
100
R62
10K
GNDP
3V3
C106
100nF
GND
U38
N/C
Vdd
N/C
N/C
GND
SCL
SDA
N/C
GZP6897D2.5KPW
GND
TP38
SCL2
SDA2
TP39
3V3
C105
100nF
GND
U37
N/C
Vdd
N/C
N/C
GND
SCL
SDA
N/C
GZP6897D2.5KPW
GND
TP40
SCL1
SDA1
TP41
U52
5V
DIR
A0
A1
A2
A3
A4
A5
A6
A7
GND
VCC
OE#
B0
B1
B2
B3
B4
B5
B6
B7
SOL2_BLOW
SOL2_VAC
SOL1_BLOW
SOL1_VAC
PUMP
LED2_OUT
LED1_OUT
GND
5V
GND
_SOL2_BLOW
_SOL2_VAC
_SOL1_BLOW
_SOL1_VAC
_PUMP
_LED2_OUT
_LED1_OUT
74HCT245PW,118

Schematic	Mainboard	Create at	2025-02-10
		Update at	2025-04-17
Board	Mainboard	Page	I/O
Drawn	Giovanni C.	OrionPnP-Core	
Reviewed			
Version	Size	Page 4 Total 6	
V0.2a	A3	EasyEDA.com	

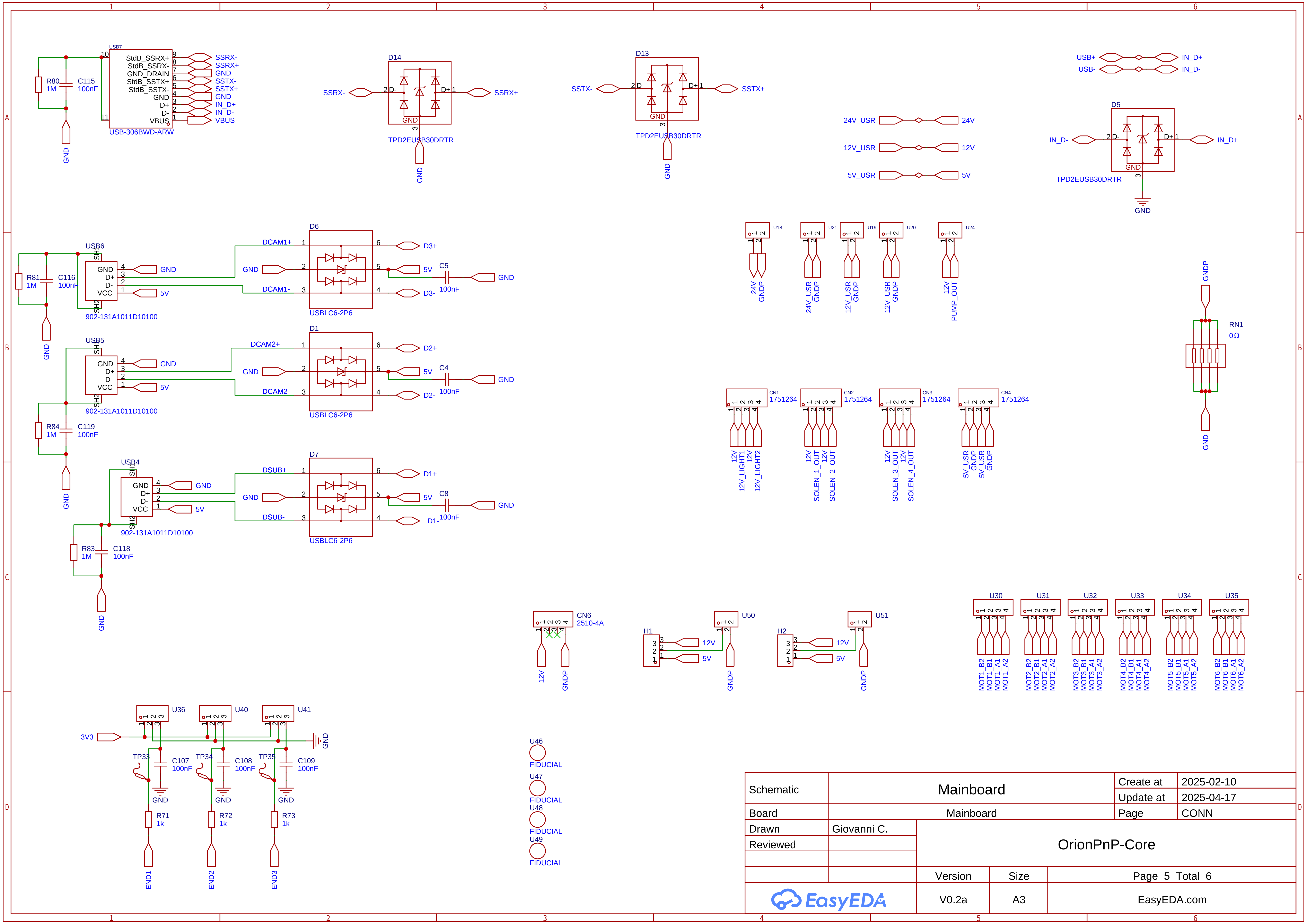
1
2
3
4
5
6
A
B
C
D
USB7
USB-306BWD-ARW
StdB_SSRX+
StdB_SSRX-
GND_DRAIN
StdB_SSTX+
StdB_SSTX-
GND
D+
D-
VBUS
SSRX-
SSRX+
GND
SSTX-
SSTX+
GND
IN_D+
IN_D-
VBUS
R80
1M
C115
100nF
GND
D14
TPD2EUSB30DRTR
SSRX-
SSRX+
D-
D+
GND
D13
TPD2EUSB30DRTR
SSTX-
SSTX+
USB+
USB-
IN_D+
IN_D-
24V_USR
24V
12V_USR
12V
5V_USR
5V
D5
TPD2EUSB30DRTR
IN_D-
IN_D+
U18
U21
U19
U20
U24
24V
GNDP
24V_USR
GNDP
12V_USR
GNDP
12V_USR
GNDP
12V
PUMP_OUT
USB6
902-131A1011D10100
R81
1M
C116
100nF
VCC
SH1
SH2
DCAM1+
DCAM1-
D6
USBLC6-2P6
D3+
D3-
5V
C5
100nF
USB5
902-131A1011D10100
DCAM2+
DCAM2-
D1
USBLC6-2P6
D2+
D2-
C4
100nF
R84
1M
C119
100nF
USB4
902-131A1011D10100
DSUB+
DSUB-
D7
USBLC6-2P6
D1+
D1-
C8
100nF
R83
1M
C118
100nF
GNDP
RN1
0Ω
CN1
1751264
CN2
1751264
CN3
1751264
CN4
1751264
12V
12V_LIGHT1
12V
12V_LIGHT2
12V
SOLEN_1_OUT
12V
SOLEN_2_OUT
12V
SOLEN_3_OUT
12V
SOLEN_4_OUT
5V_USR
GNDP
5V_USR
GNDP
CN6
2510-4A
12V
GNDP
H1
U50
H2
U51
12V
5V
GNDP
U30
U31
U32
U33
U34
U35
MOT1_B2
MOT1_B1
MOT1_A1
MOT1_A2
MOT2_B2
MOT2_B1
MOT2_A1
MOT2_A2
MOT3_B2
MOT3_B1
MOT3_A1
MOT3_A2
MOT4_B2
MOT4_B1
MOT4_A1
MOT4_A2
MOT5_B2
MOT5_B1
MOT5_A1
MOT5_A2
MOT6_B2
MOT6_B1
MOT6_A1
MOT6_A2
U36
U40
U41
3V3
GND
TP33
TP34
TP35
C107
100nF
C108
100nF
C109
100nF
R71
1k
R72
1k
R73
1k
END1
END2
END3
U46
FIDUCIAL
U47
FIDUCIAL
U48
FIDUCIAL
U49
FIDUCIAL

Schematic	Mainboard	Create at	2025-02-10
		Update at	2025-04-17
Board	Mainboard	Page	CONN
Drawn	Giovanni C.	OrionPnP-Core	
Reviewed			
	Version	Size	Page 5 Total 6
EasyEDA	V0.2a	A3	EasyEDA.com

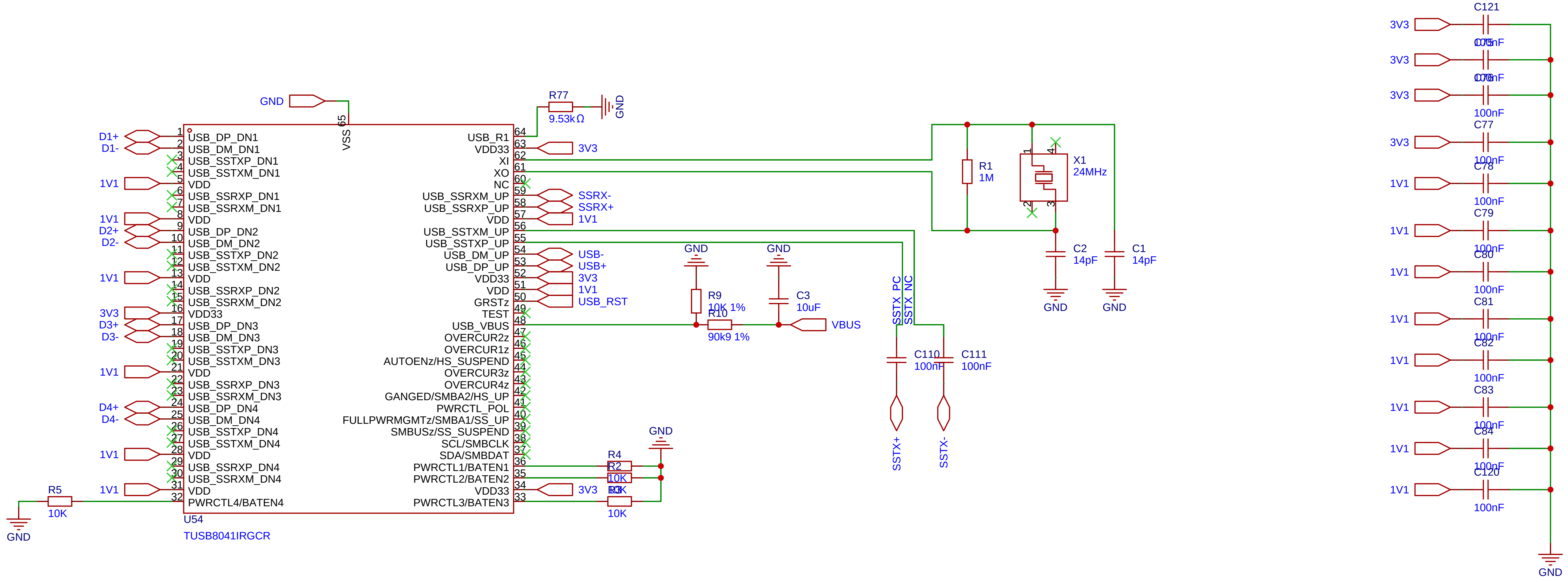
U54
TUSB8041IRGCR
VSS 65
GND
1 USB_DP_DN1
2 USB_DM_DN1
3 USB_SSTXP_DN1
4 USB_SSTXM_DN1
5 VDD
6 USB_SSRXP_DN1
7 USB_SSRXM_DN1
8 VDD
9 USB_DP_DN2
10 USB_DM_DN2
11 USB_SSTXP_DN2
12 USB_SSTXM_DN2
13 VDD
14 USB_SSRXP_DN2
15 USB_SSRXM_DN2
16 VDD33
17 USB_DP_DN3
18 USB_DM_DN3
19 USB_SSTXP_DN3
20 USB_SSTXM_DN3
21 VDD
22 USB_SSRXP_DN3
23 USB_SSRXM_DN3
24 USB_DP_DN4
25 USB_DM_DN4
26 USB_SSTXP_DN4
27 USB_SSTXM_DN4
28 VDD
29 USB_SSRXP_DN4
30 USB_SSRXM_DN4
31 VDD
32 PWRCTL4/BATEN4
64 USB_R1
63 VDD33
62 XI
61 XO
60 NC
59 USB_SSRXM_UP
58 USB_SSRXP_UP
57 VDD
56 USB_SSTXM_UP
55 USB_SSTXP_UP
54 USB_DM_UP
53 USB_DP_UP
52 VDD33
51 VDD
50 GRSTz
49 TEST
48 USB_VBUS
47 OVERCUR2z
46 OVERCUR1z
45 AUTOENz/HS_SUSPEND
44 OVERCUR3z
43 OVERCUR4z
42 GANGED/SMBA2/HS_UP
41 PWRCTL_POL
40 FULLPWRMGMTz/SMBA1/SS_UP
39 SMBUSz/SS_SUSPEND
38 SCL/SMBCLK
37 SDA/SMBDAT
36 PWRCTL1/BATEN1
35 PWRCTL2/BATEN2
34 VDD33
33 PWRCTL3/BATEN3
D1+
D1-
1V1
D2+
D2-
3V3
D3+
D3-
D4+
D4-
R5
10K
R77
9.53kΩ
SSRX-
SSRX+
USB-
USB+
USB_RST
VBUS
R9
10K 1%
R10
90k9 1%
C3
10uF
R4
R2
10K
R3
10K
SSTX_PC
SSTX_NC
C110
100nF
C111
100nF
SSTX+
SSTX-
R1
1M
X1
24MHz
C2
14pF
C1
14pF
C121
C75
C76
C77
C78
C79
C80
C81
C82
C83
C84
C120
100nF

Schematic	Mainboard	Create at	2025-02-10
		Update at	2025-04-04
Board	Mainboard	Page	USB
Drawn	Cesarotto G.	OrionPnP-Core	
Reviewed			
		Version	Size
		V0.2a	A3

Page 6 Total 6

Orion