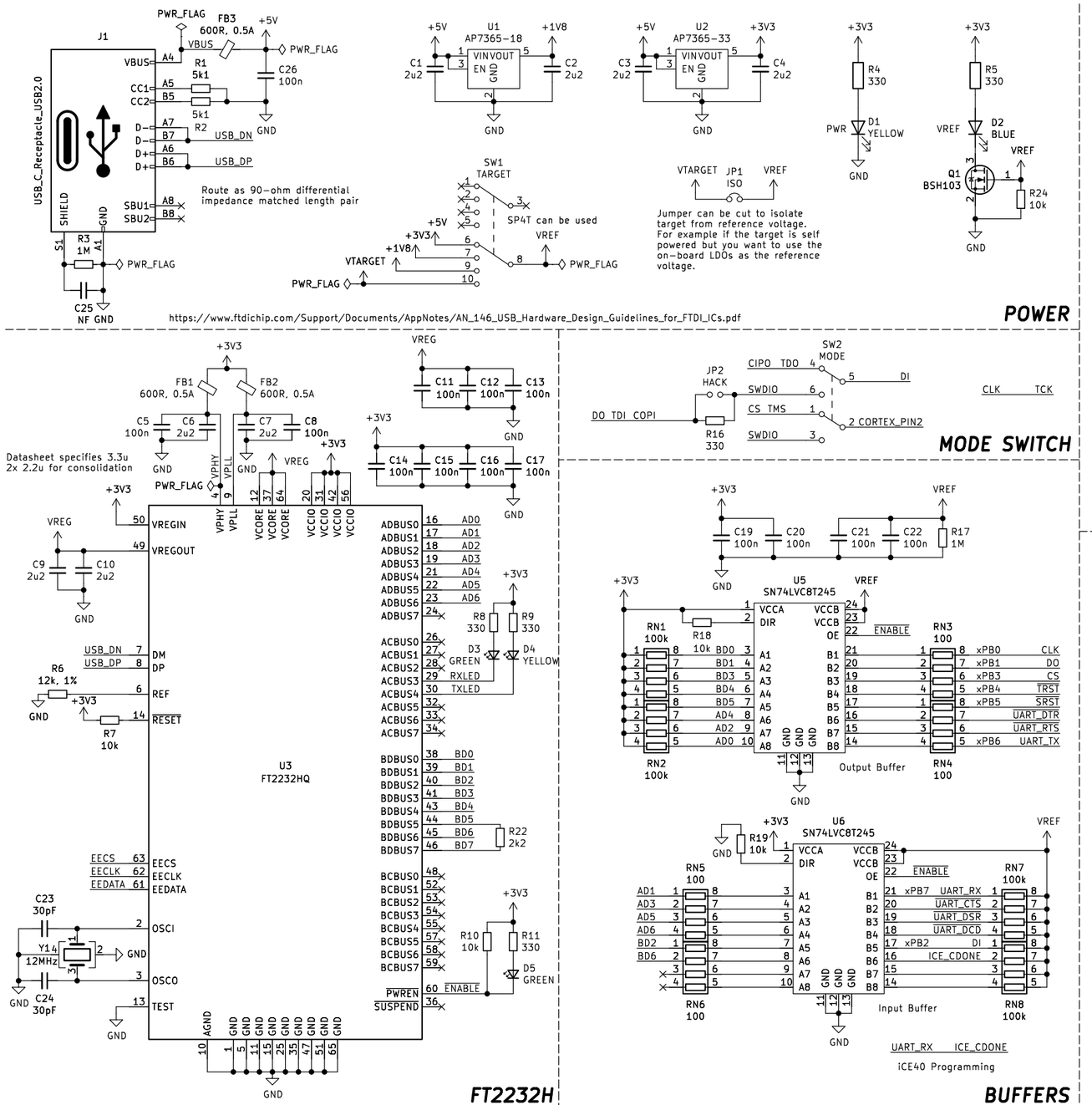

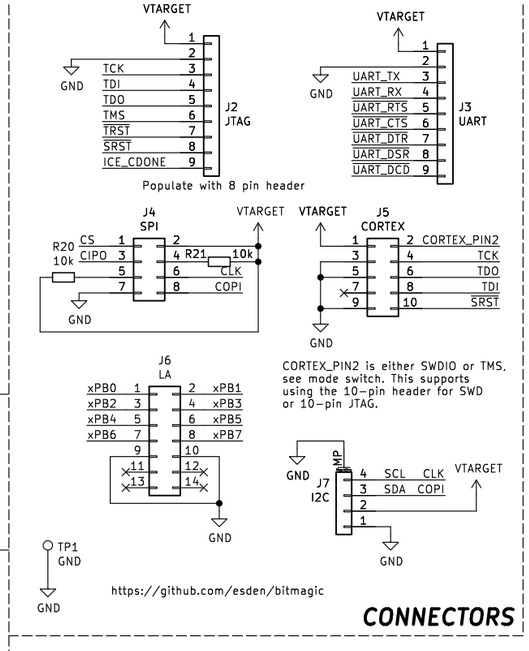

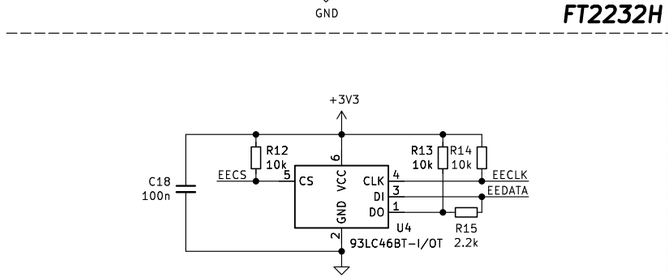

HARDWARE/ART

Licensed under CC-BY-SA 4.0
Copyright 2020 Franklin Harding

Sheet: /
File: tigard.kicad_sch

Title: Tigard

Size: A3	Date: 2020-10-27	Rev: v1.1
KiCad E.D.A. 8.0.3		Id: 1/1