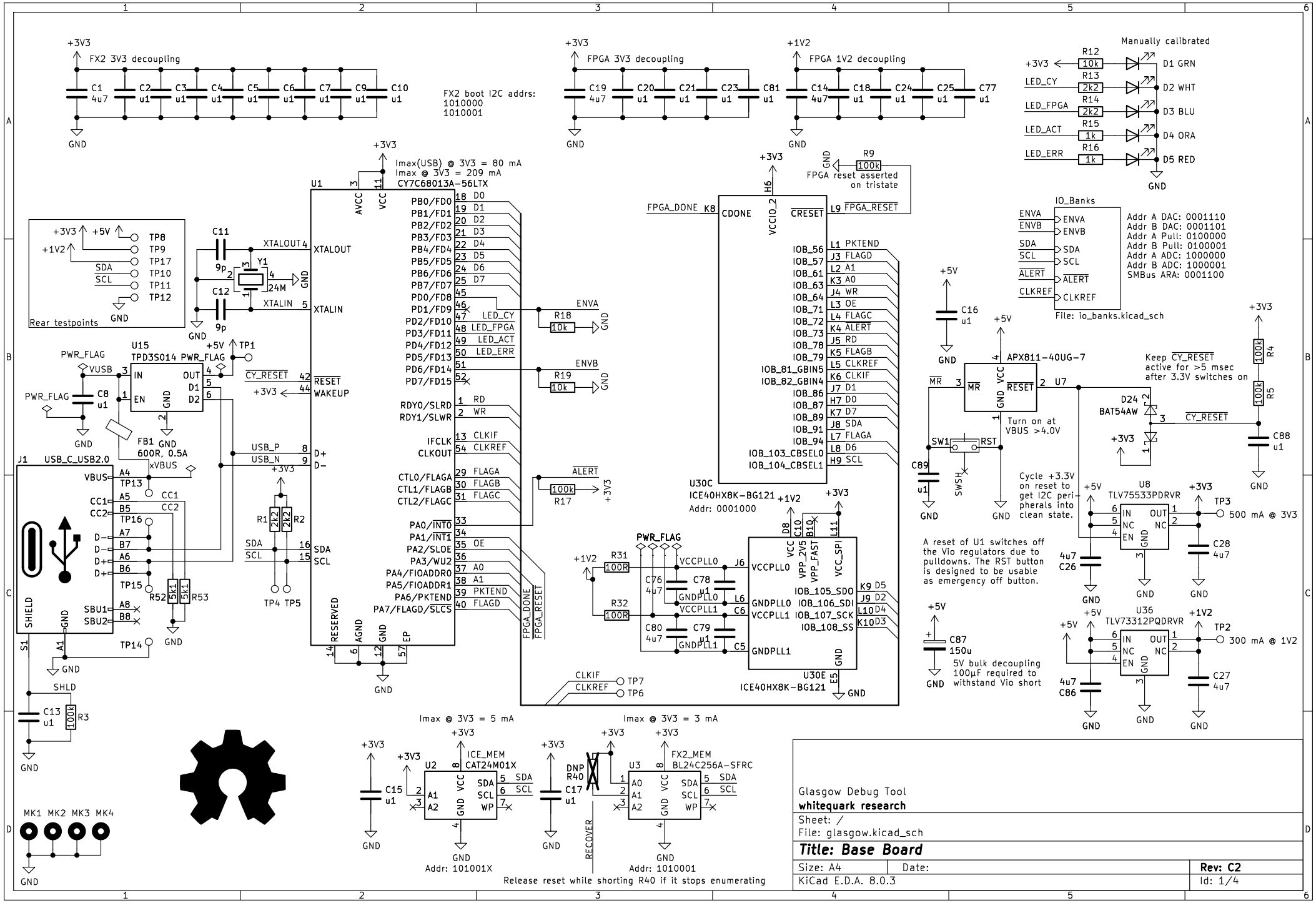
FX2 3V3 decoupling
FPGA 3V3 decoupling
FPGA 1V2 decoupling
FX2 boot I2C addrs:
1010000
1010001
Manually calibrated
D1 GRN
D2 WHT
D3 BLU
D4 ORA
D5 RED
LED_CY
LED_FPGA
LED_ACT
LED_ERR
Imax(USB) @ 3V3 = 80 mA
Imax @ 3V3 = 209 mA
U1 CY7C68013A-56LTX
FPGA reset asserted on tristate
FPGA_DONE
FPGA_RESET
U30C ICE40HX8K-BG121
Addr: 0001000
U30E ICE40HX8K-BG121
IO_Banks
Addr A DAC: 0001110
Addr B DAC: 0001101
Addr A Pull: 0100000
Addr B Pull: 0100001
Addr A ADC: 1000000
Addr B ADC: 1000001
SMBus ARA: 0001100
File: io_banks.kicad_sch
Rear testpoints
U15 TPD3S014
FB1 GND 600R, 0.5A
J1 USB_C_USB2.0
APX811-40UG-7
Keep CY_RESET active for >5 msec after 3.3V switches on
Turn on at VBUS >4.0V
Cycle +3.3V on reset to get I2C peripherals into clean state.
A reset of U1 switches off the Vio regulators due to pulldowns. The RST button is designed to be usable as emergency off button.
U8 TLV75533PDRVR
500 mA @ 3V3
U36 TLV73312PQDRVR
300 mA @ 1V2
5V bulk decoupling 100µF required to withstand Vio short
Imax @ 3V3 = 5 mA
U2 CAT24M01X
ICE_MEM
Addr: 101001X
Imax @ 3V3 = 3 mA
U3 BL24C256A-SFRC
FX2_MEM
Addr: 1010001
Release reset while shorting R40 if it stops enumerating
Glasgow Debug Tool
whitequark research
Sheet: /
File: glasgow.kicad_sch
Title: Base Board
Size: A4
Date:
Rev: C2
KiCad E.D.A. 8.0.3
Id: 1/4

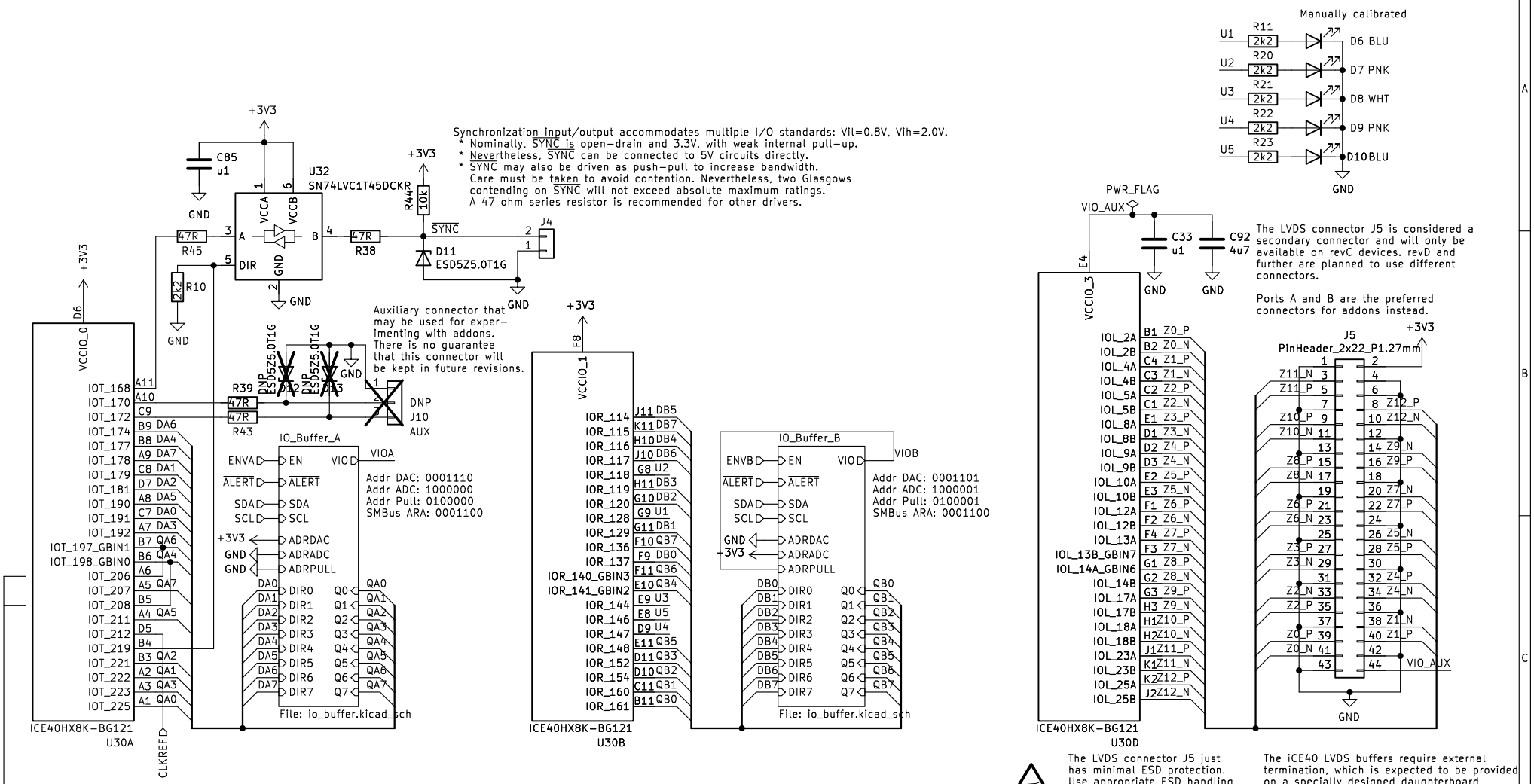


Glasgow debug tool
**whitequark research**

Sheet: /IO_Banks/
File: io_banks.kicad_sch

**Title: I/O Banks**

| Size: A4 | Date: | Rev: C2 |
|---|---|---|
| KiCad E.D.A. 8.0.3 | | Id: 2/4 |

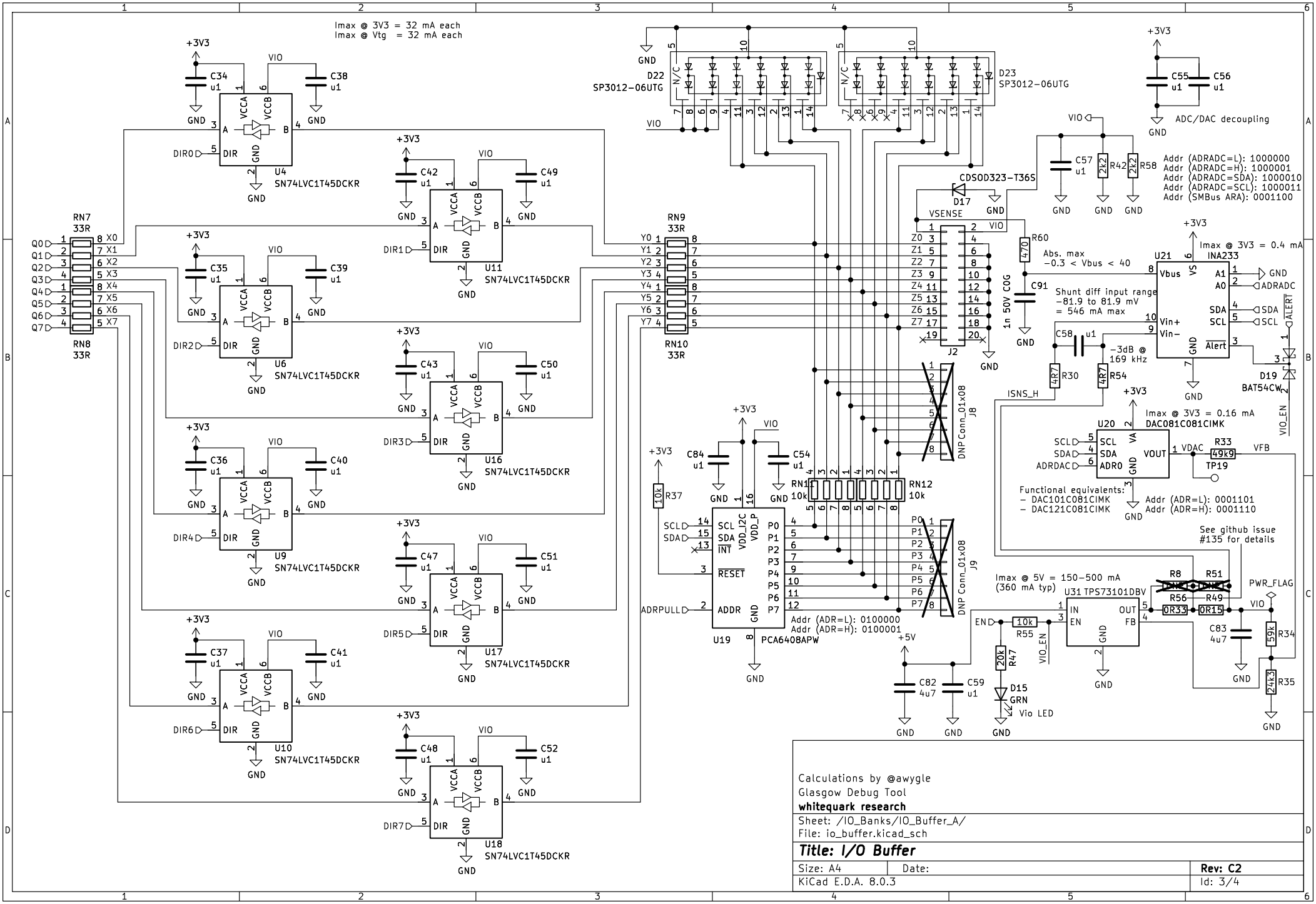
Imax @ 3V3 = 32 mA each
Imax @ Vtg = 32 mA each
U4 SN74LVC1T45DCKR
U11 SN74LVC1T45DCKR
U6 SN74LVC1T45DCKR
U16 SN74LVC1T45DCKR
U9 SN74LVC1T45DCKR
U17 SN74LVC1T45DCKR
U10 SN74LVC1T45DCKR
U18 SN74LVC1T45DCKR
RN7 33R
RN8 33R
RN9 33R
RN10 33R
D22 SP3012-06UTG
D23 SP3012-06UTG
ADC/DAC decoupling
D17 CDSOD323-T36S
Addr (ADRADC=L): 1000000
Addr (ADRADC=H): 1000001
Addr (ADRADC=SDA): 1000010
Addr (ADRADC=SCL): 1000011
Addr (SMBus ARA): 0001100
Abs. max
−0.3 < Vbus < 40
Shunt diff input range
−81.9 to 81.9 mV
= 546 mA max
−3dB @
169 kHz
Imax @ 3V3 = 0.4 mA
U21 INA233
Imax @ 3V3 = 0.16 mA
U20 DAC081C081CIMK
Functional equivalents:
– DAC101C081CIMK
– DAC121C081CIMK
Addr (ADR=L): 0001101
Addr (ADR=H): 0001110
See github issue
#135 for details
Imax @ 5V = 150–500 mA
(360 mA typ)
U31 TPS73101DBV
U19 PCA6408APW
Addr (ADR=L): 0100000
Addr (ADR=H): 0100001
DNP Conn_01x08 J8
DNP Conn_01x08 J9
J2
D19 BAT54CW
D15 GRN
Vio LED
Calculations by @awygle
Glasgow Debug Tool
whitequark research
Sheet: /IO_Banks/IO_Buffer_A/
File: io_buffer.kicad_sch
Title: I/O Buffer
Size: A4
Date:
Rev: C2
KiCad E.D.A. 8.0.3
Id: 3/4

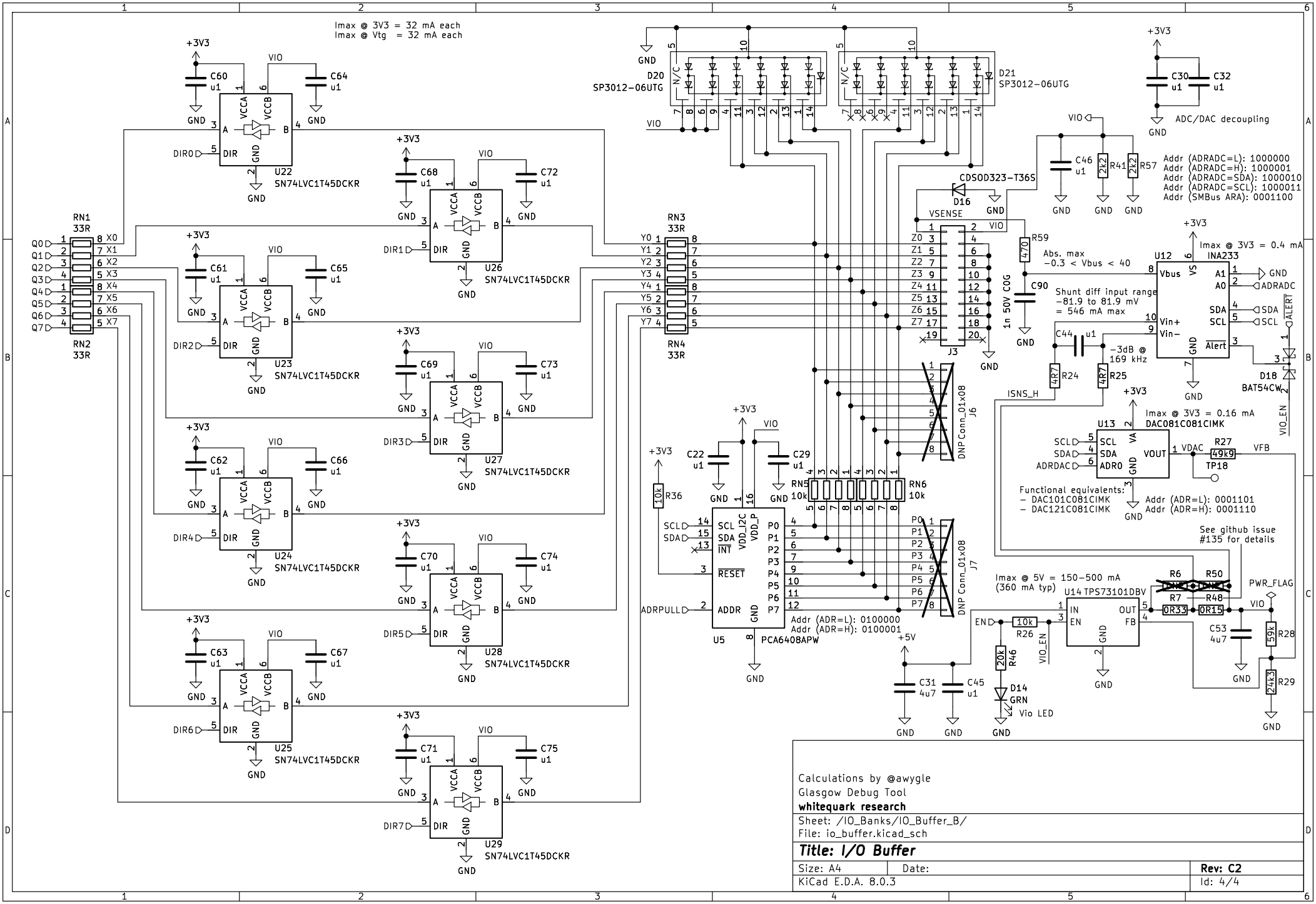
Imax @ 3V3 = 32 mA each
Imax @ Vtg = 32 mA each
U22 SN74LVC1T45DCKR
U23 SN74LVC1T45DCKR
U24 SN74LVC1T45DCKR
U25 SN74LVC1T45DCKR
U26 SN74LVC1T45DCKR
U27 SN74LVC1T45DCKR
U28 SN74LVC1T45DCKR
U29 SN74LVC1T45DCKR
RN1 33R
RN2 33R
RN3 33R
RN4 33R
D20 SP3012-06UTG
D21 SP3012-06UTG
D16 CDSOD323-T36S
J3
DNP Conn_01x08 J6
DNP Conn_01x08 J7
U5 PCA6408APW
Addr (ADR=L): 0100000
Addr (ADR=H): 0100001
RN5 10k
RN6 10k
ADC/DAC decoupling
Addr (ADRADC=L): 1000000
Addr (ADRADC=H): 1000001
Addr (ADRADC=SDA): 1000010
Addr (ADRADC=SCL): 1000011
Addr (SMBus ARA): 0001100
Abs. max
−0.3 < Vbus < 40
Shunt diff input range
−81.9 to 81.9 mV
= 546 mA max
−3dB @
169 kHz
U12 INA233
Imax @ 3V3 = 0.4 mA
D18 BAT54CW
Imax @ 3V3 = 0.16 mA
U13 DAC081C081CIMK
Functional equivalents:
– DAC101C081CIMK
– DAC121C081CIMK
Addr (ADR=L): 0001101
Addr (ADR=H): 0001110
See github issue
#135 for details
Imax @ 5V = 150–500 mA
(360 mA typ)
U14 TPS73101DBV
Vio LED
Calculations by @awygle
Glasgow Debug Tool
whitequark research
Sheet: /IO_Banks/IO_Buffer_B/
File: io_buffer.kicad_sch
Title: I/O Buffer
Size: A4
Date:
Rev: C2
KiCad E.D.A. 8.0.3
Id: 4/4