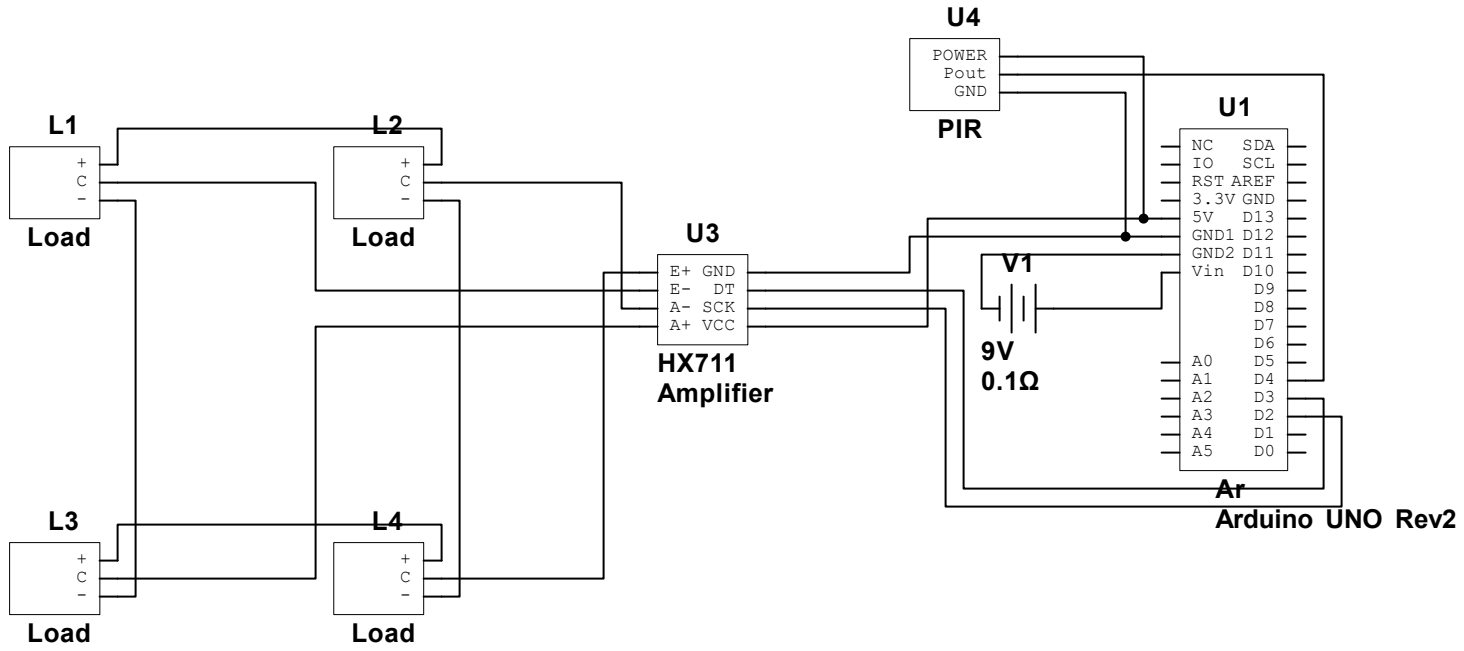

Electronics Workbench
801-111 Peter Street
Toronto, ON M5V 2H1
(416) 977-5550

Electronics WORKBENCH
A NATIONAL INSTRUMENTS COMPANY

Title: Arduino	Desc.: Strain Gauge	
Designed by: Khanh Le	Document No:	Revision: 1
Checked by:	Date: 11/10/2021	Size: A
Approved by:	Sheet 1 of 1	