Unit-3

Single Phase Transformer.

Introduction :-

- A transformer is a static electrical ~~machine~~ Device that transfer electrical energy from one circuit to another circuit without change in power and frequency.
- A transformer operates on the principle of "electromagnetic induction" in form of "mutual induction".
- It is a pure AC electrical device because it work on ac voltage supply.
- A transformer is used either increased or decreased the voltage and current level of output signal.
- In a transformer, the amount of electrical power being transfer from one winding to another winding via magnetic circuit.
- Transformer have no moving parts so it is rugged and durable in construction.
- Transformer is widely used in electrical transmission and distribution system, electrical devices and electronic devices.

$$P_i = P_o$$

$$f_{in} = f_{out}$$

Classification Of Transformer

Transformers are classified on following basis

1. Based on level of voltage

   (a) Step up transformer → $V_i < V_o$
   (b) Step down transformer → $V_i > V_i$

2. Based on construction

   (a) Core type
   (b) Shell type

3. Based on number of phases

   (a) Single-phase transformer
   (b) Three- phase transformer

4. Based on power system application

   (a) Distribution transformer → step-down transformer
   (b) Power transformer → step-up transformer

Base on Cooling System

5. ~~Based on level of voltage~~

   (a) Natural cool transformer
   (b) Force cool transformer

6. Based on number of winding

   (a) Single winding transformer or auto transformer
   (b) Two winding transformer (single-Phase Transformer)
   (c) Three winding transformer
   ↳ (3-Phase Transformer).

7. Based on measurement application

   (a) Current transformer (C.T)
   (b) Voltage transformer
   or Potential Transformer (P.T).

8. Based on operating frequency

(a) Power transformer
(b) Audio frequency transformer → (f = 20Hz to 20kHz)

9. Based on electronics and other transformer

(a) Impedance matching transformer
(b) Pulse transformer

Circuit Symbol Of Transformer

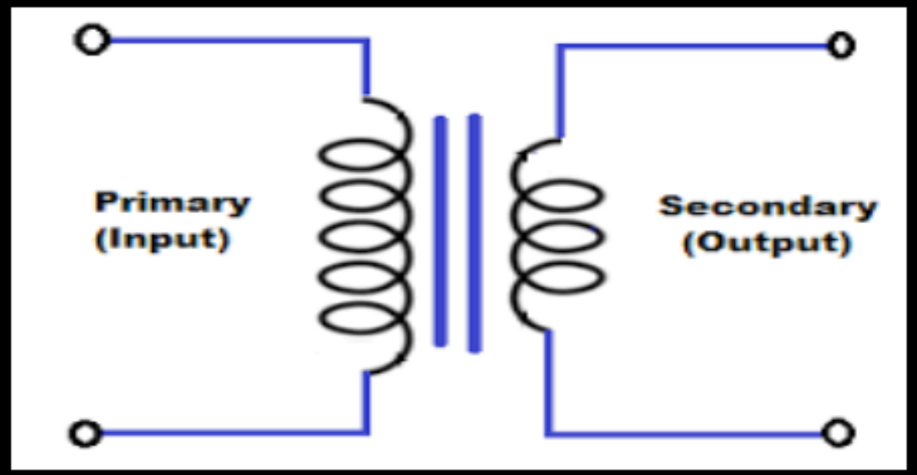

- Generally a transformer consists of two winding namely primary winding and secondary winding.
- The winding which is connected to source is called primary winding.
- The winding which is connected to load is called secondary winding.
- The primary and secondary winding is electrically seperated but magnetically coupled.
- The transformer consist of two type of circuits namely electric circuit and magnetic circuit.
- The electric circuit is formed by windings.
- The magnetic circuit is formed by iron core.

- The number of turns in primary and secondary winding in not equal.

$$N_1 > N_2 \qquad \text{OR} \qquad N_1 < N_2$$

N_1 is number of turns in primary winding and N_2 is number of turns in secondary winding.

- The number of turns in primary winding and secondary winding made unequal to get step-up and step-down voltage.

TRANSFORMER CONSTRUCTION

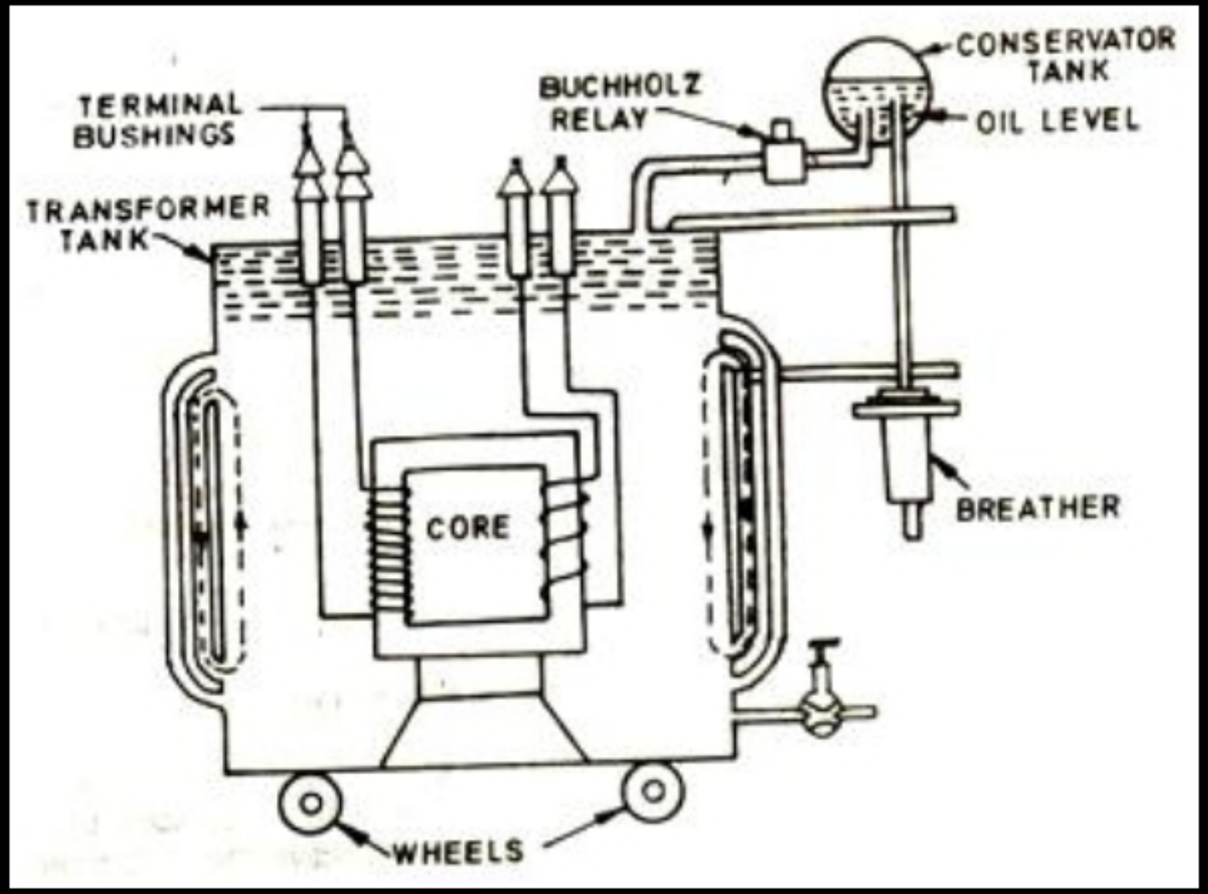

TRANSFORMER CONSTRUCTION

- The main part of transformer are a laminated steel core and two windings.
- The steel core is a stack of thin silicon steel and all sheets are laminated.
- The lamination reduces eddy current loss and silicon steel reduces hysteresis loss.
- The thickness of lamination varies from 0.35 mm (of 25 Hz) to 0.55mm(50Hz).
- The silicon steel is highly permeable, so it is easily magnetise and demagnetised.
- The silicon steel containing low percentage of silicon i.e about 3 to 4 %.
- The power transformer CRGO(Cold Rain Grain Oriented) is used for the material.
- Transformer has two winding namely primary winding and secondary winding.
- Both winding are electrically seperated but magnetically coupled.
- Generally copper or alluminium wire is used in winding.
- The steel core form a magnetic circuit through which flux is passes from primary winding to secondary winding.
- On the basis of primary and secondary coils are placed around the laminated core, the transformer has two types

1. Core type 2. Shell type

1. Core Type

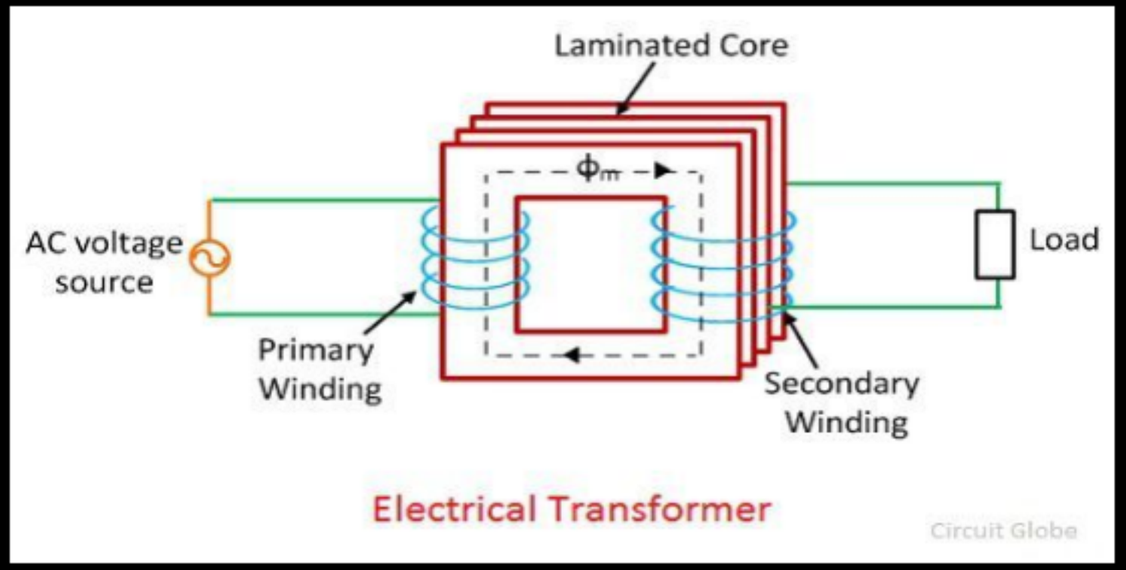

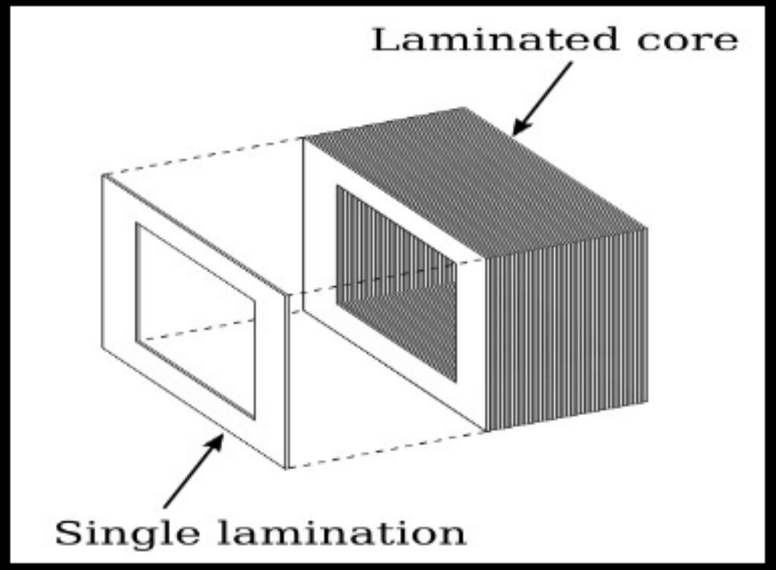

- In this transformer, the winding surround a considerable part of the core so its name is core type transformer.
- The primary and secondary windings are constructed on the opposite legs (or limbs) of the core.
- But in practical transformer half of primary nad half of secondary winding is placed on the both legs, not primary on one legs and secondary on the other. So leakage flux is less in this tye of winding.

- In core type transformer, two strips of L shape or U- shape and I- shape are interconnected to make a single unit of core.
- Primary and secondary windings are divided in two parts namely low voltage (LV) and high voltage (HV) winding.
- Since the LV winding is easiest to insulate, it is placed nearest to the core.

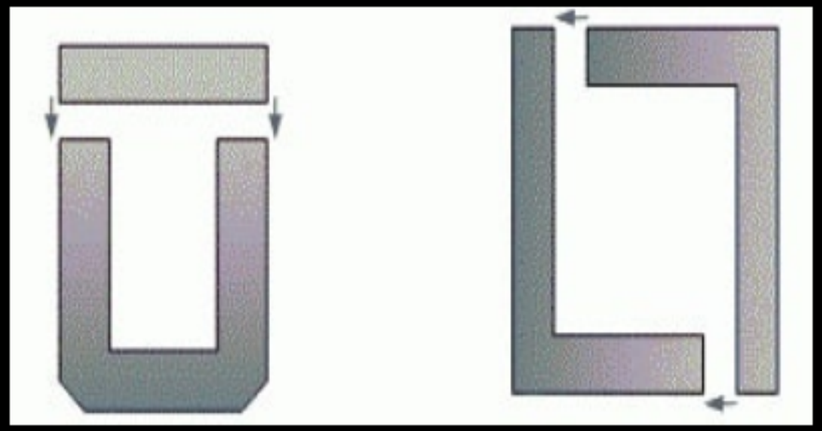

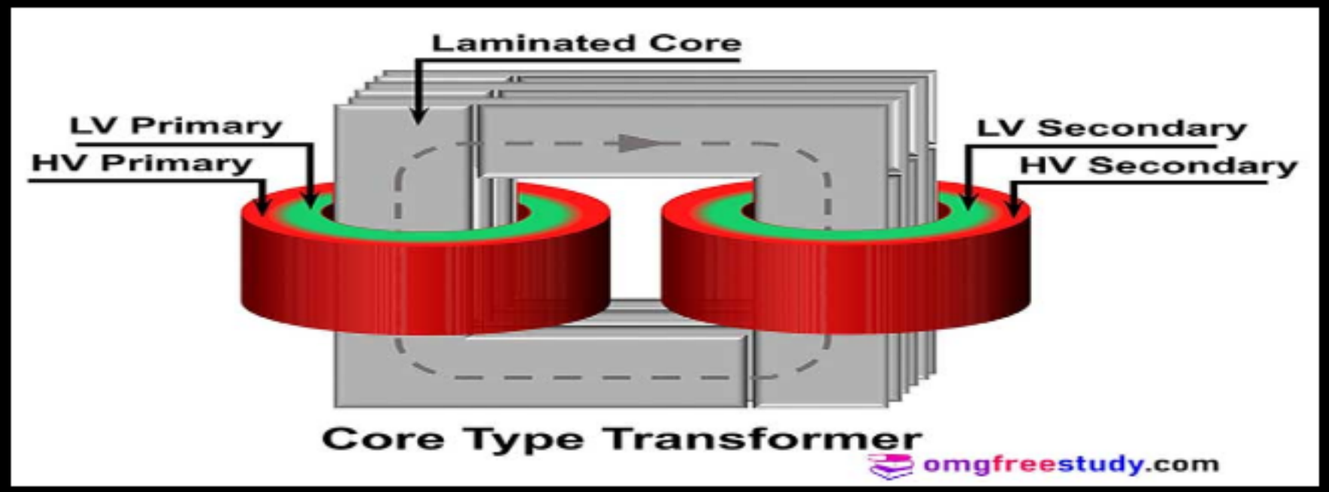

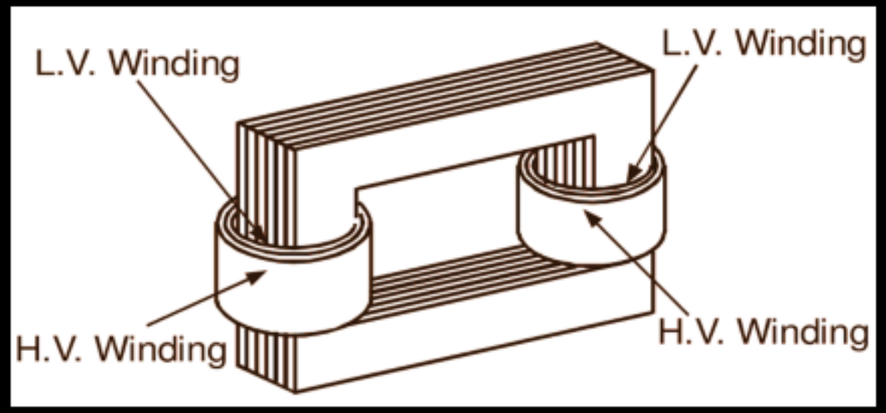

- Rectangular core with rectangular shape of coil be used for small size core type transformer.
- Where circular shape of coil be used for large size transformer.

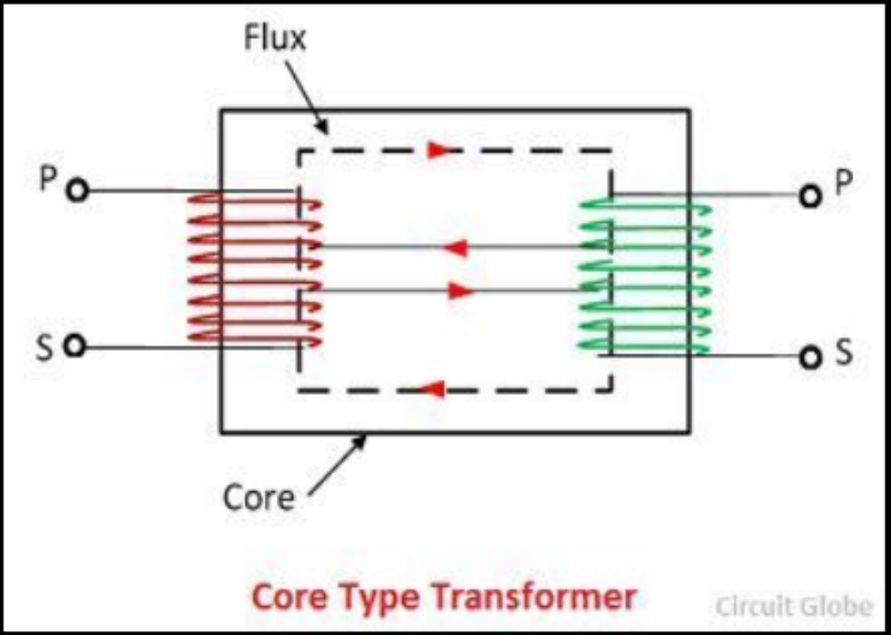

2. Core Type

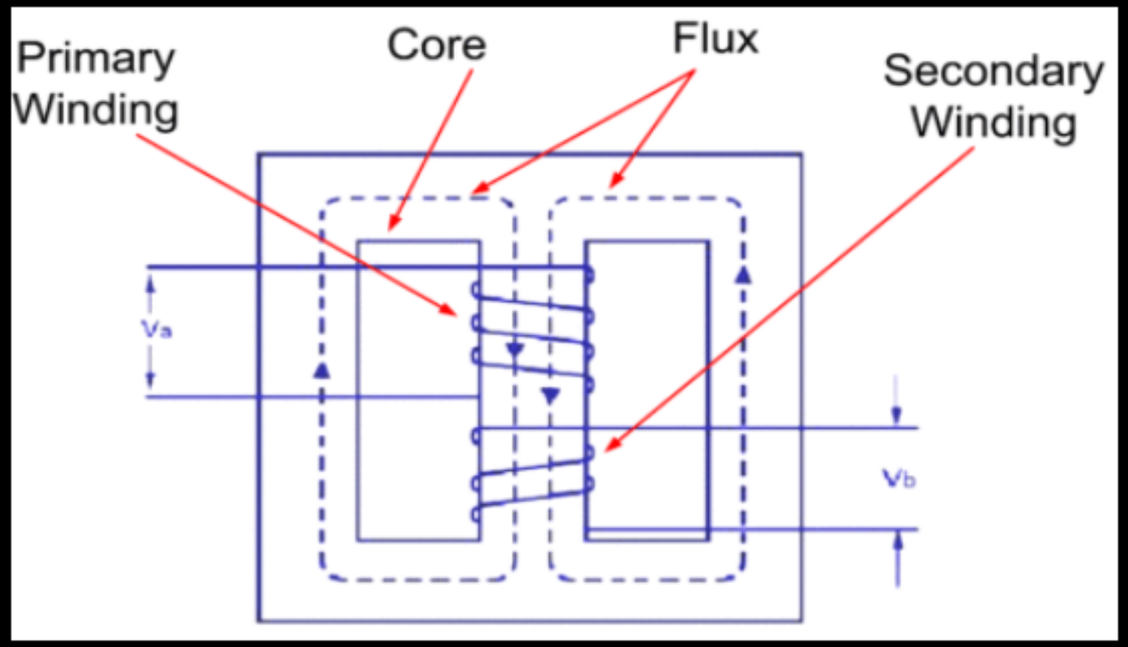

- In shell type construction of the transformer the magnetic core consist of three vertical legs and two horizontal section.
- Both the primary and secondary windings are wound on the central limb and the two outer limbs provide the low reluctance flux path.
- Therefore, the shell type construction involves the use of a double magnetic circuit.
- The low voltage (LV) winding is placed next to the core (on the central limb) and around the low voltage winding the high voltage (HV) winding is placed. This arrangement reduces the requirement of insulating material.

- In shell type transformer, a shorter magnetic path is available, hence it requires a small magnetising current.
- The natural cooling is poor in shell type transformer, because the coils are placed on the central limb.
- Shell type transformer are used for high rating and low voltage application.
- In shell type transformer, one strips of E shape and one strip of I - shape is interconnected to make a single unit of core.

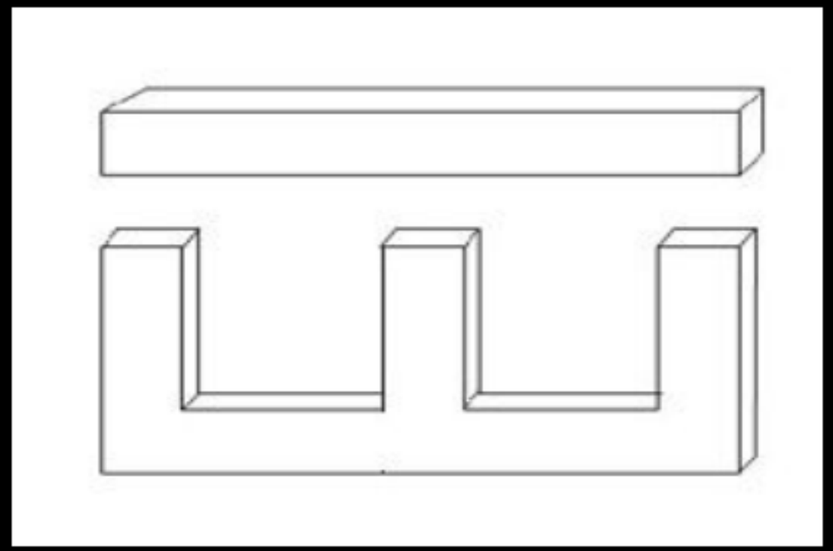

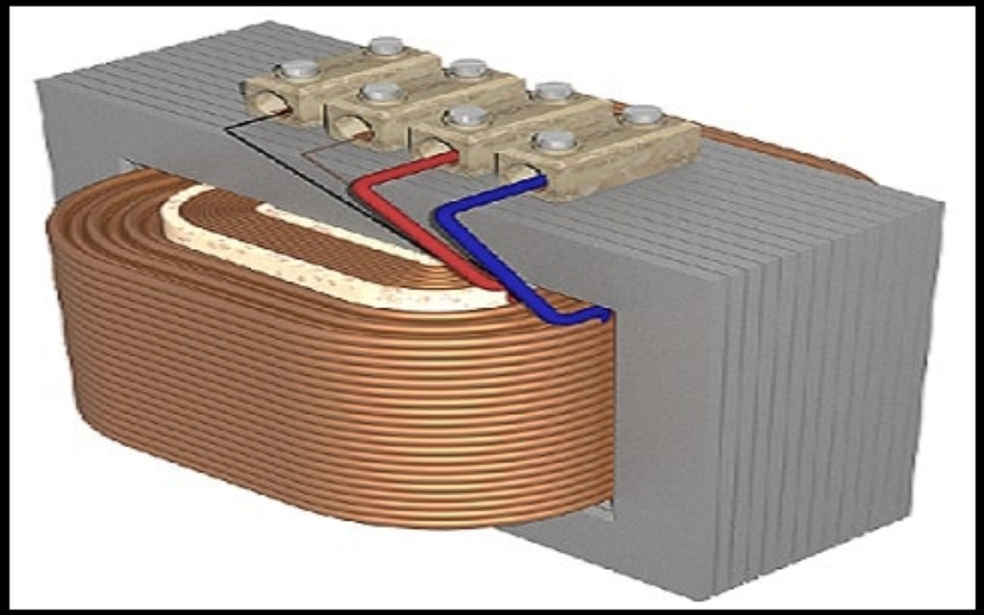

Difference Between Core Type And Shell Type Transformer

Core Type

1. Core is surrounding by the winding.
2. Single path of flux is present in core type transformer.
3. Leakage flux is high.
4. Less insulating material is required.
5. It is used in low current and high voltage application.
6. Core is made up of L,U,I shape of lamination.

Shell Type

1. Shell is surrounding by the core .
2. Two path of flux is present in shell type transformer.
3. Leakage flux is less.
4. More insulating material is required.
5. It is used in high current and low voltage application.
6. Core is made up of E and I shape of lamination.

Other Parts Of Transformer

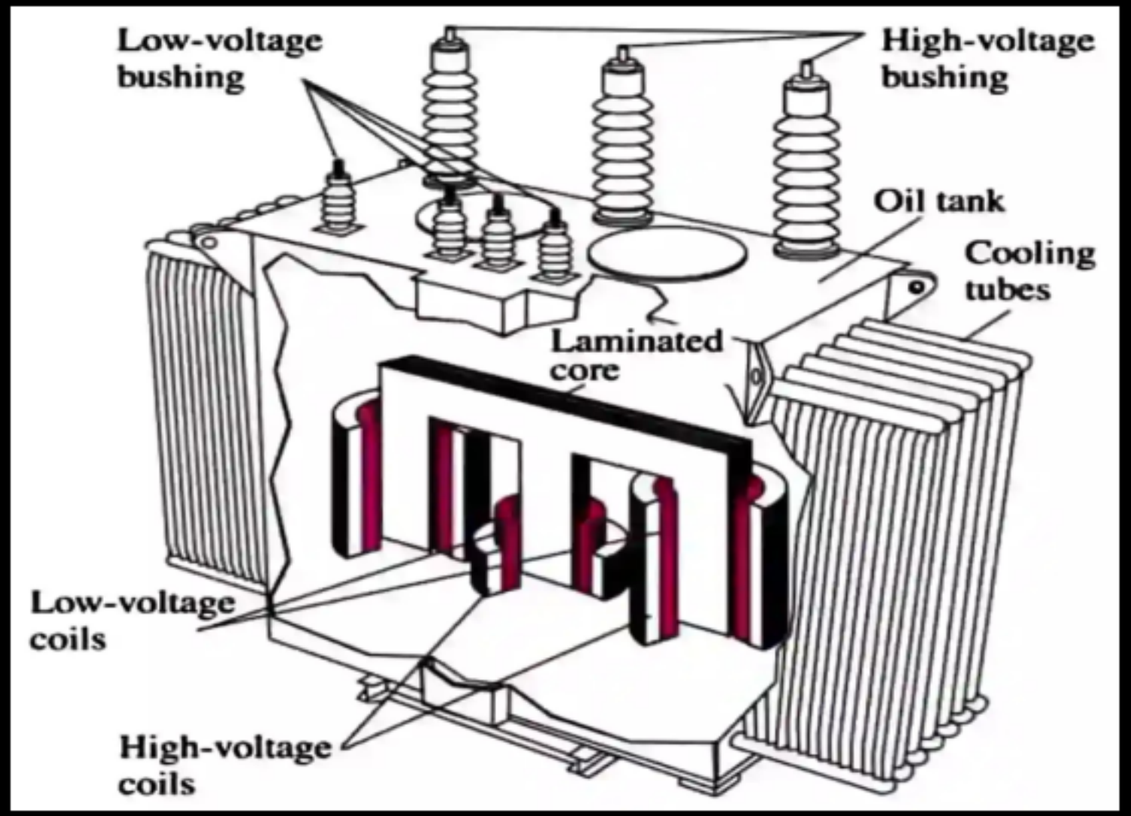

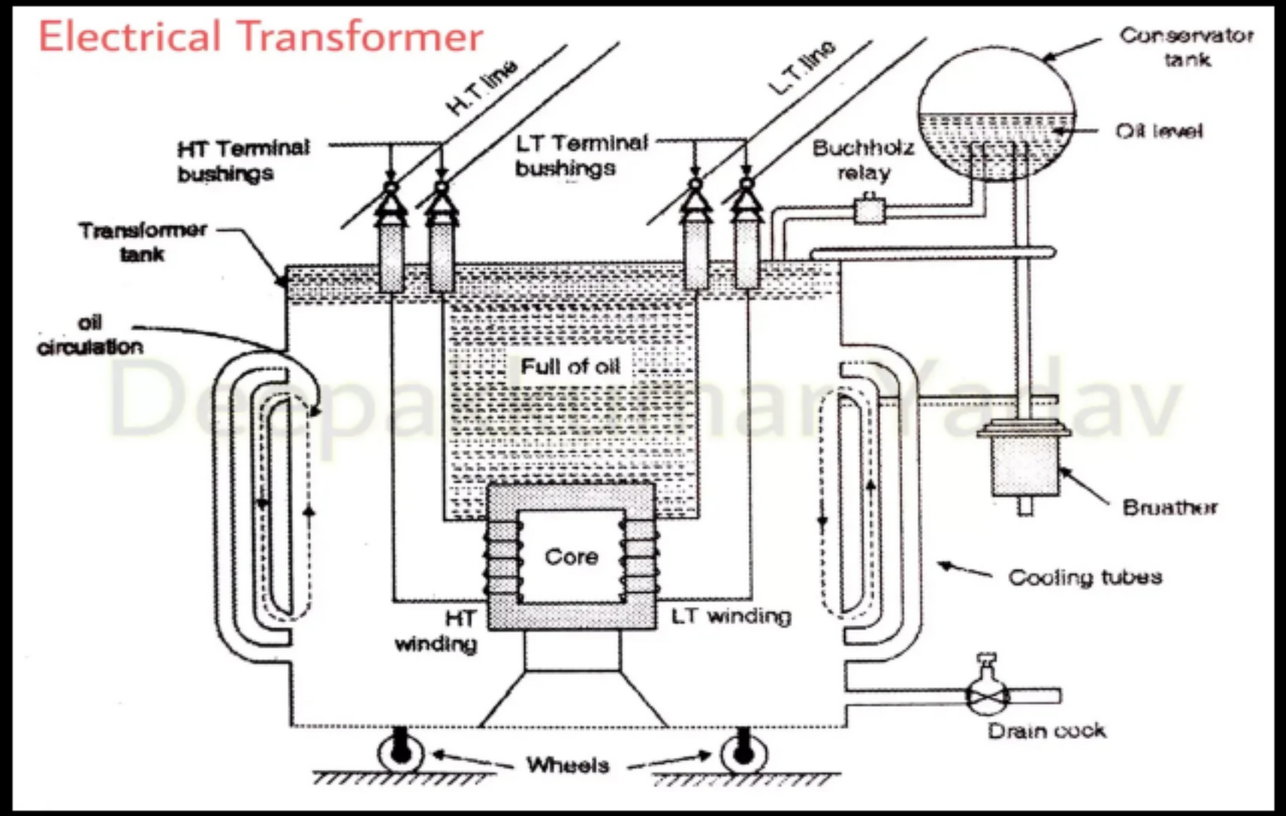

1. Tank :-

The complete assembly of transformer i.e core and windings are placed in a suitable container called the main tank. The tank contains the transformer oil, which provide cooling as well as insulation.

2. Conservator Tank

This tank is provided in many transformer with main tank in order to slow down deterioration of the oil and to keep the main tank full of oil.

3. Buchholz's Relay

This is the gas operated protective relay. It on the alarm to indicate the shortage of oil or presence of gas in case of over loading or minor fault. It take out the transformer, with the help of circuit breaker, in case of fault.

4. Relay:-

Relay is a device which senses the faulty part of the power system and sents a tripping signal to the circuit breaker.

5. Circuit breaker:-

Circuit breaker is a device which isolate the faulty part of power system after receiving the trip command from the relay.

6. Breathers :-

It is attached to conservator tanks and contain silica gel which prevents the transformer oil from moist air. The presence of even an extremely small percentage of moisture in the oil, it lower the dielectric strength of the oil consirerably.

7. Temperature Gauge:-

This is provided for the measurement of temperature of hot transformer oil.

8.Oil Gauge:-

This is provided to indicate oil level inside the tank.

9. Cooling Tube

To obtained the effective cooling the surface area of tank is increased by cooling tubes.

10. Terminal Bushing

Suitable terminal bushing is used for providing insulation between conductor and tank. It also bringing out the terminals of winding from the tank. The bushing is either of porcelain, oil-filled or capacitor type.

11. Radiator

Radiator is a part of transformer which radiates the thermal energy (heat) ,so that transformer is prevented from overheating.

Dielectric Or Insulation

- Insulation is the important part of a transformer which prevent leakage of current and isolates the conducting part of transformer.
- The insulating layer is provided between core and winding, low voltage (LV) and high voltage (HV) winding.
- For better insulation the paper, bakelite or press-boad are used as insulator.
- Transformer oil is used for providing better insulation and cooling of the transformer.
- Natural mineral oil is used in the transformer for insulation.

WORKING PRINCIPLE OF TRANSFORMER

Let us consider a single phase transformer which has no losses.

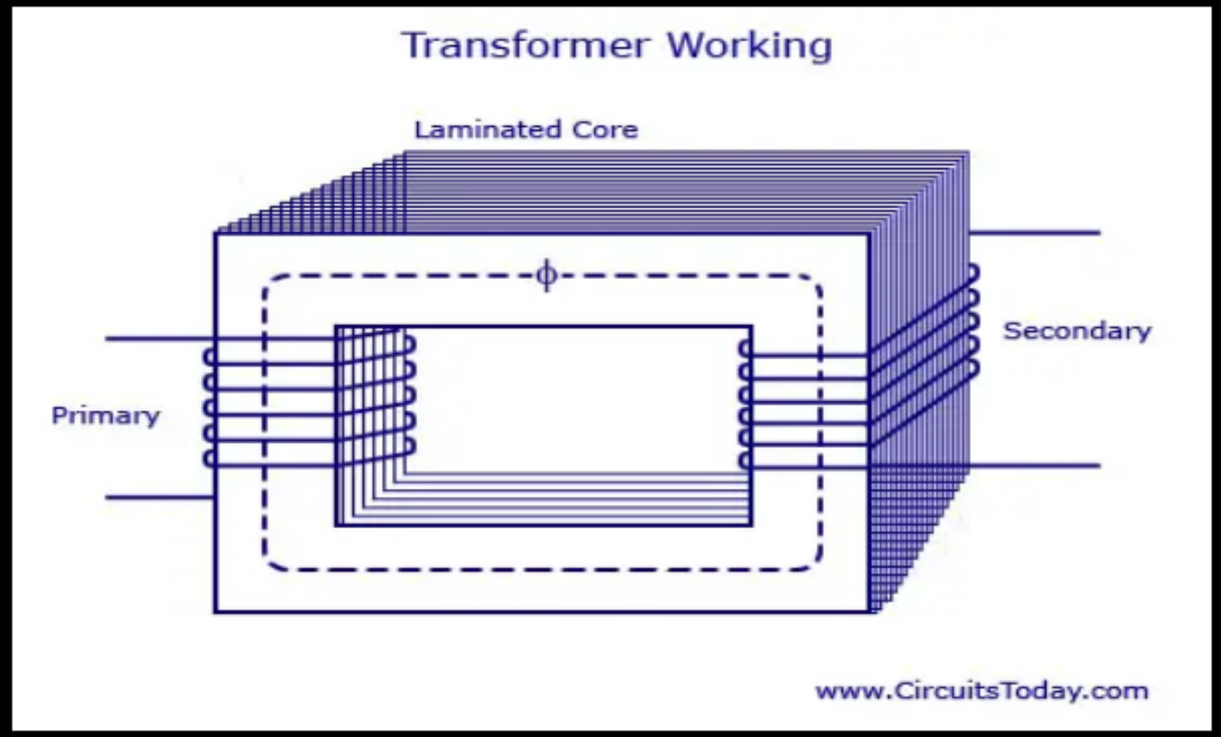

- When an alternating voltage V_1 is applied to the primary winding of a transformer, a current flows through it.
- The current flow through the primary winding is called exciting current I and lags V_1 by 90 °.
- The exciting current produces an alternating flux $\varnothing$ in the magnetic core, which flow through the both primary and secondary winding.
- Therefore, it produces self - induced e.m.f (E_1) in primary winding.
- This self - induces e.m.f E_1 is equal to input voltage V_1 but opposite in polarity.
- Self induced emf E_1 is also known as back emf or counter emf.
- The value of self induced emf is

$$E_1 = -N_1 \frac{d\varnothing}{dt} \qquad E_1 \propto N_1 \quad \& \quad E_1 \propto \frac{d\varnothing}{dt}$$

this induce e.m.f E_1 is antiphase with V_1 but its magnitude is equal to V_1.

- When the flux $\varnothing$ passes through the secondary winding by magnetic core than it produces an e.m.f E_2 , which is known as mutual induced e.m.f.
- The e.m.f is antiphase with V_1 and its magnitude is proportional to the rate of change of flux and the number of secondary turns.