| REVISIONS | | | | |
|---|---|---|---|---|
| ZONE | REV | DESCRIPTION | DATE | APPROVED |

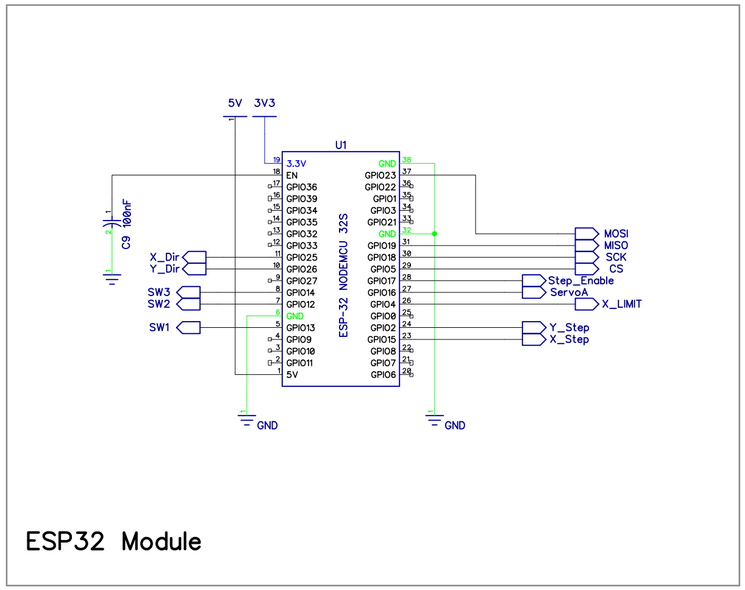


ESP32 Module

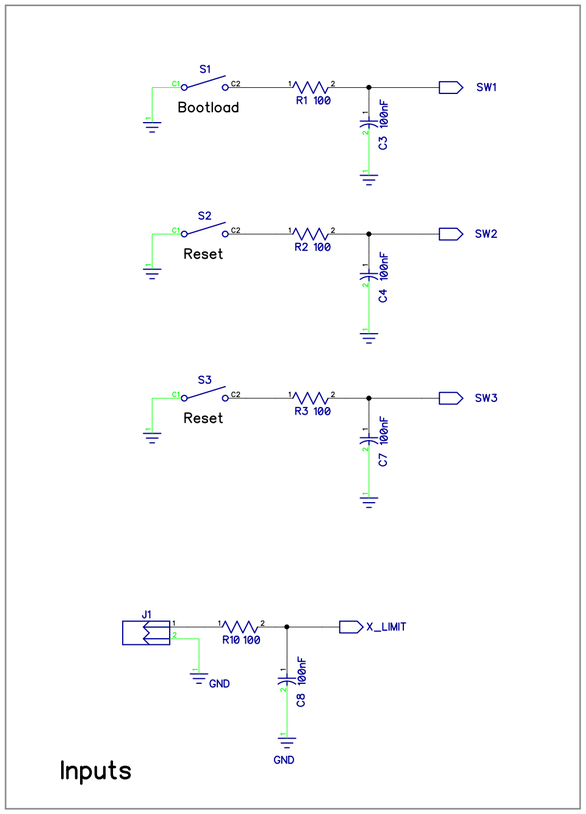


Inputs

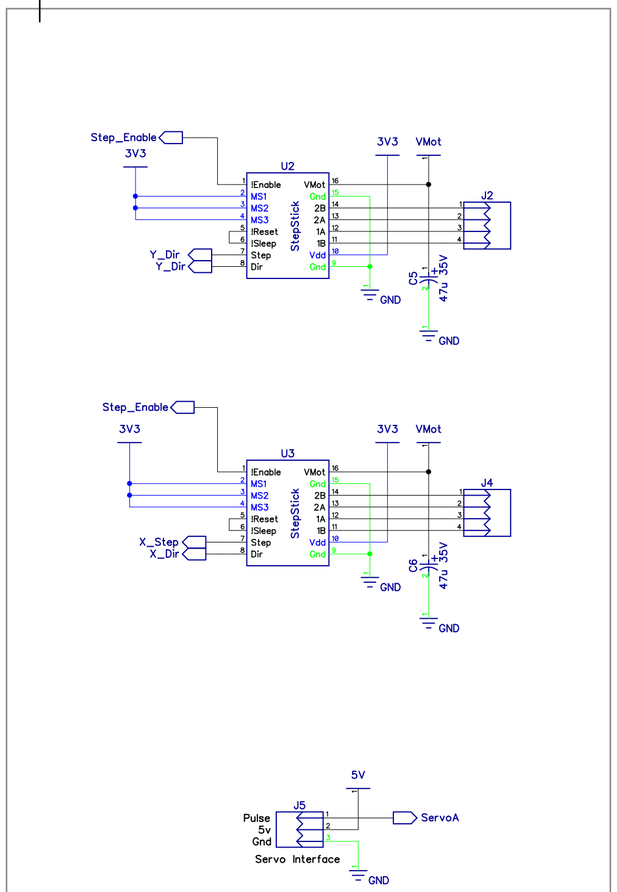


Stepper motor Drivers

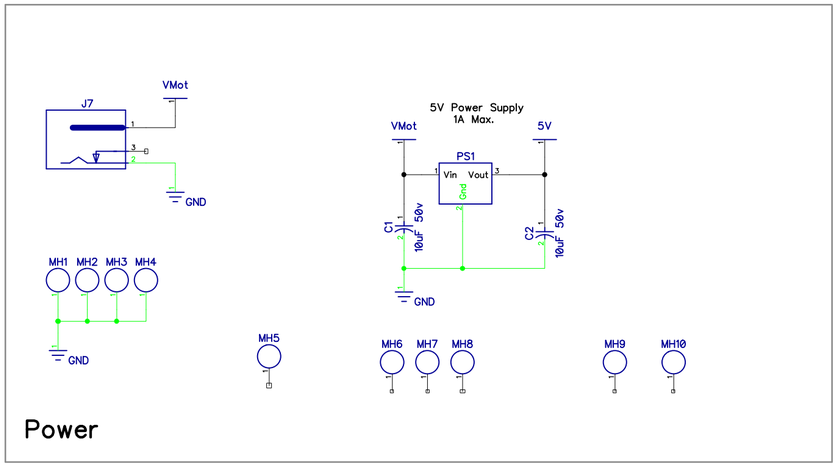


Power

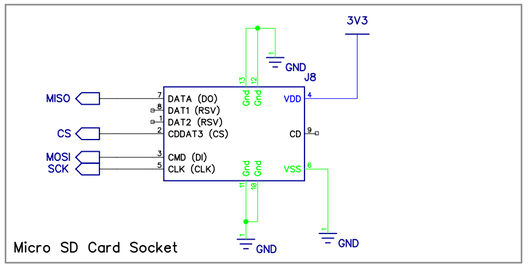


Micro SD Card Socket

| | | | | |
|---|---|---|---|---|
| | ESP32 Pen / Laser Controller | | | |
| | ESP32 Pen / Laser Controller | | | |
| Buildlog.net | SIZE | FSCM NO. | DWG NO. | REV 1.1 |
| | SCALE | | Sheet 1 | |