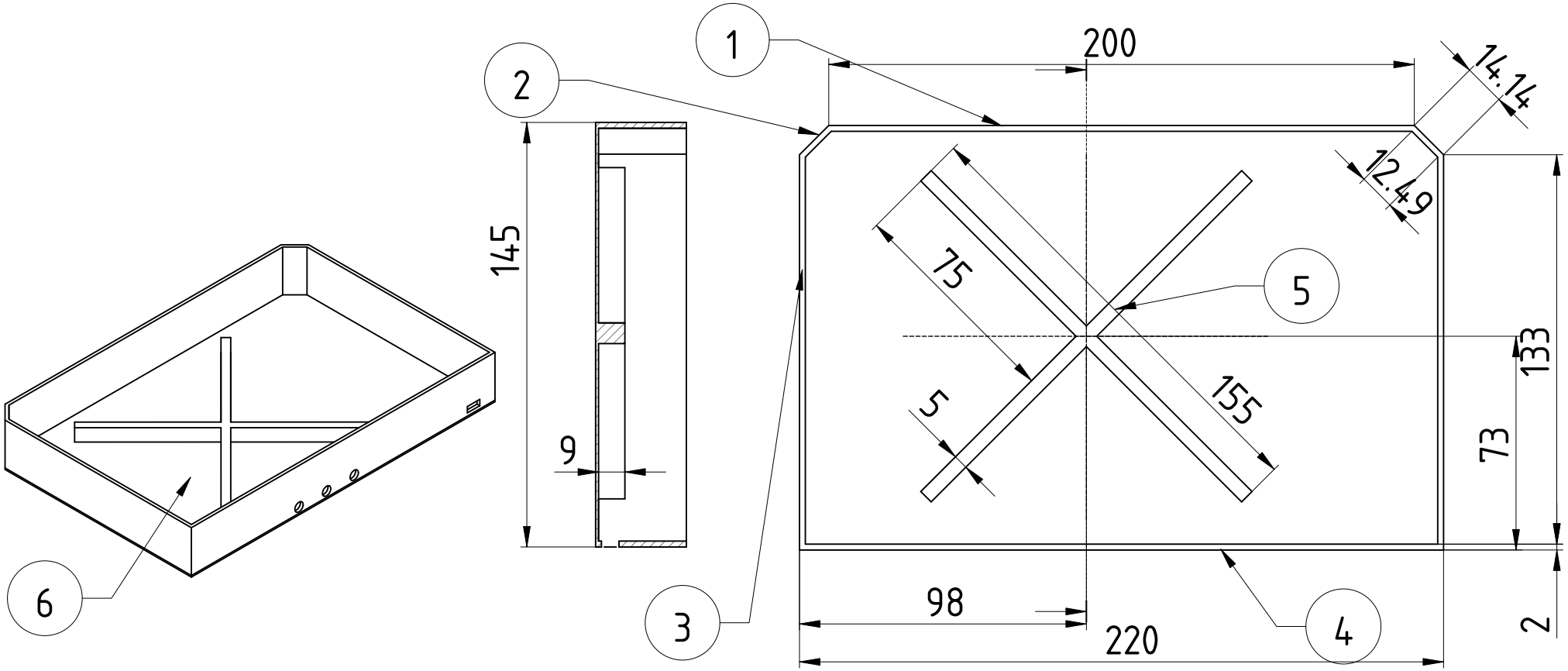

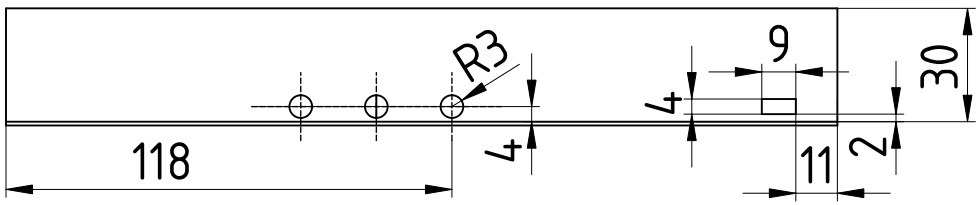

Part	Inner dim.	Outer dim.	Height	Layers	Qty
1	200	-	30	2	1
2	12	14	30	2	2
3	133	-	30	2	2
4	220	-	30	2	1
5	155	-	9	5	2
6	220	145	-	1	1

DESIGNED BY: py DATE: 26/2/2024		miniPad alpha Main body - Base	
SIZE A4	SCALE -	DRAWING NUMBER Drawing number	SHEET Sheet