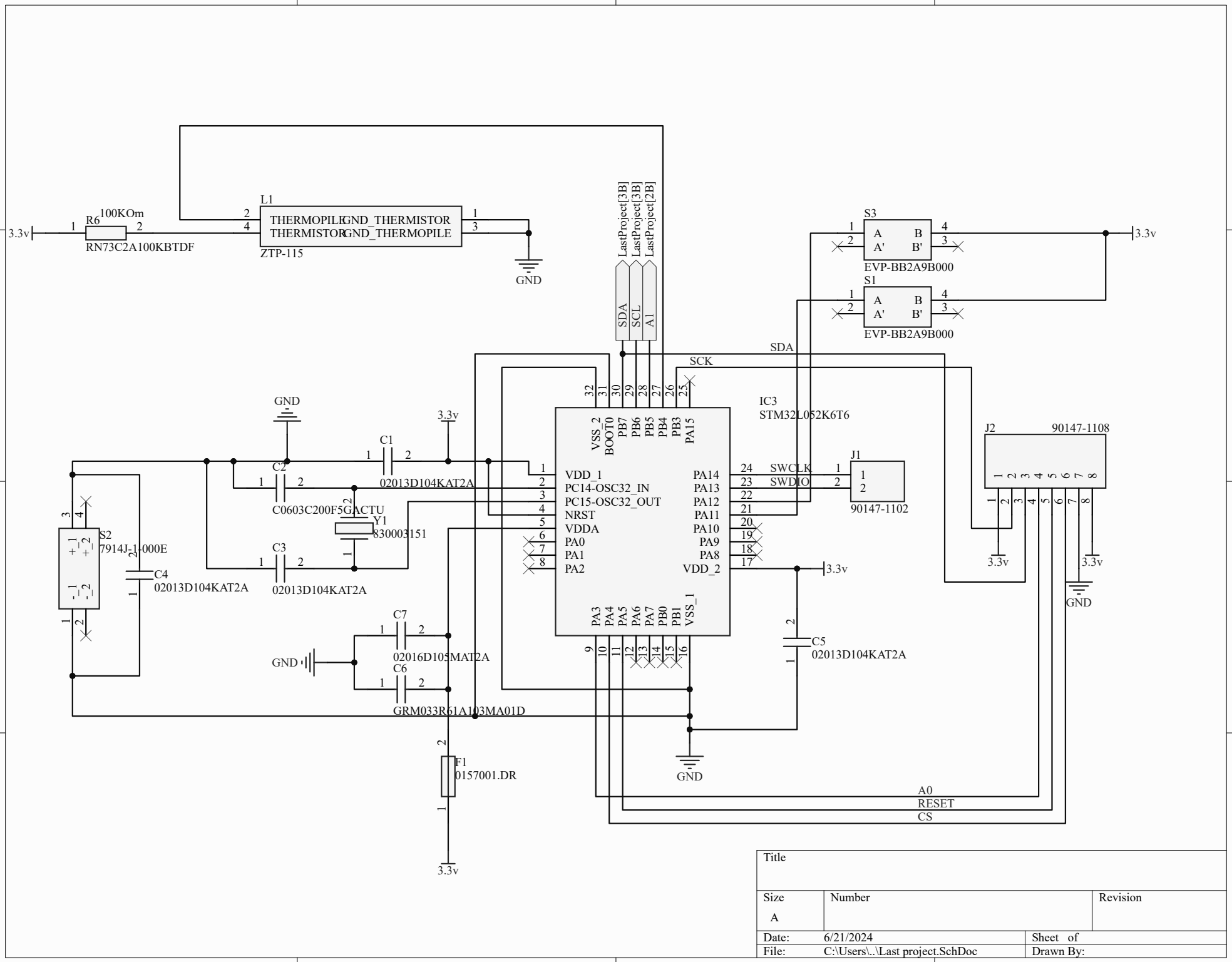

Title		
Size A	Number	Revision
Date: 6/21/2024		Sheet of
File: C:\Users\..\Last project.SchDoc		Drawn By: