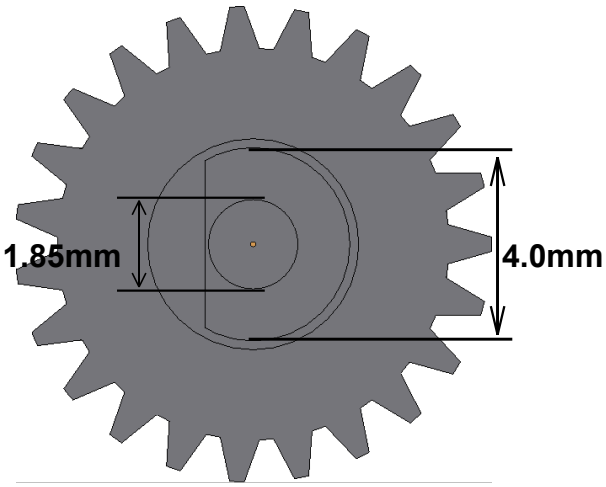
1.85mm
4.0mm

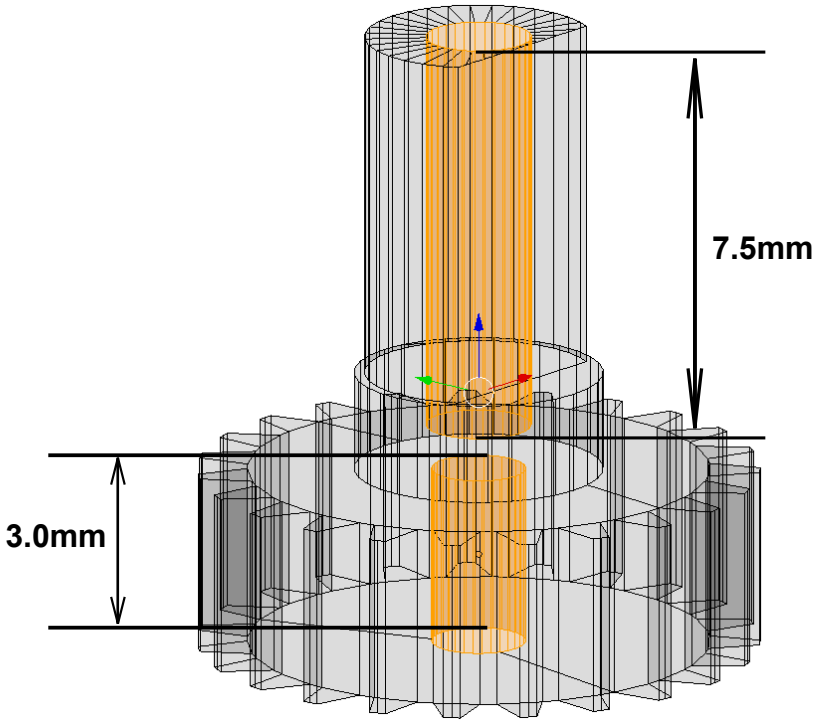
7.5mm
3.0mm

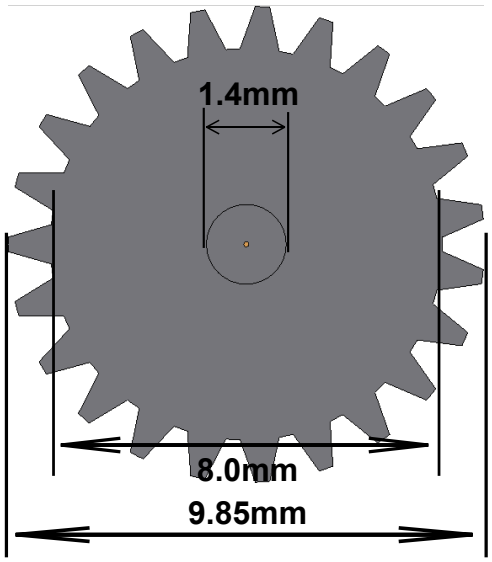
1.4mm
8.0mm
9.85mm

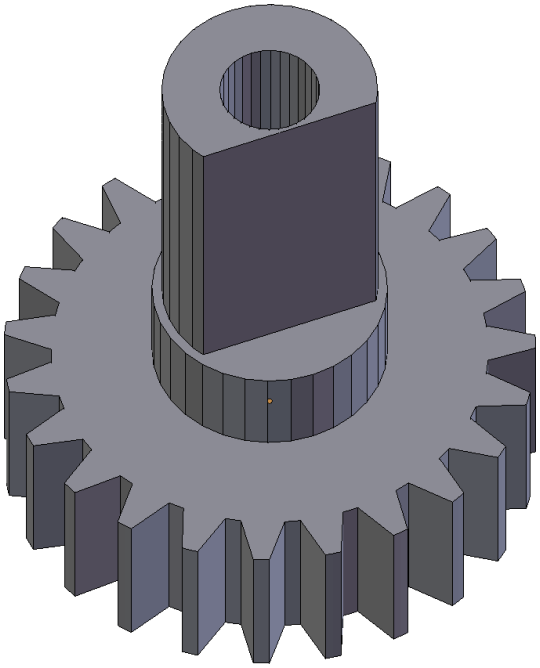

23 Teeth

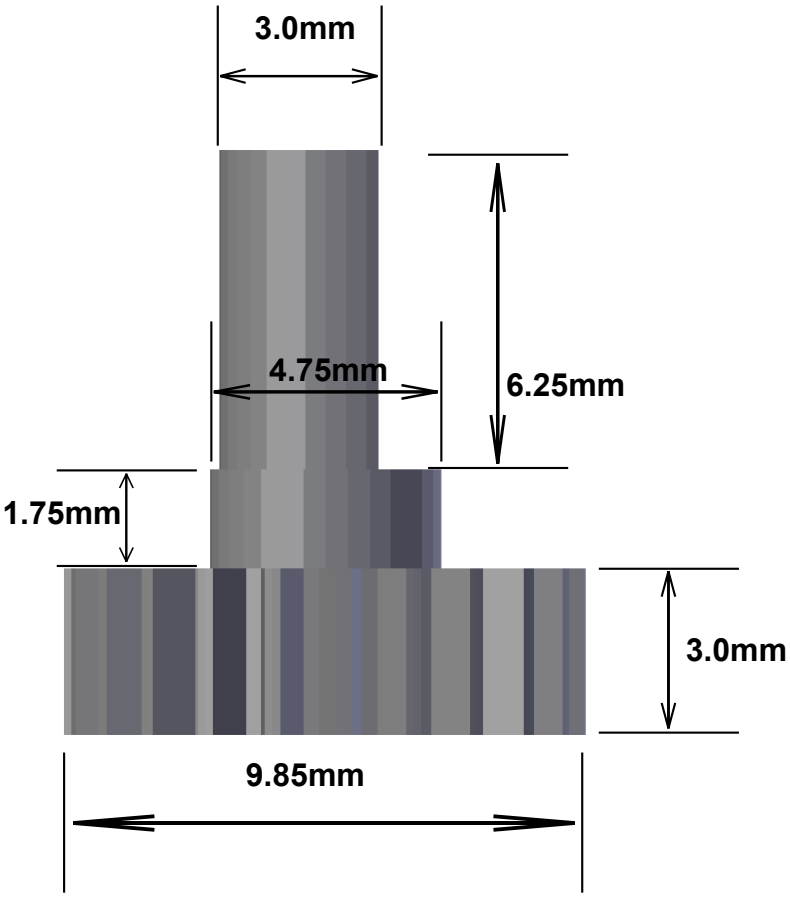
3.0mm
4.75mm
6.25mm
1.75mm
3.0mm
9.85mm